City of San Buenaventura
Public Works Department
Engineering Division

Contract Documents
&
Specifications

Interim Fire Station No.7

Specification No.
2025-010

For use in connection with Standard Specifications for Public Works Construction
Version 2.2

CITY OF SAN BUENAVENTURA
PUBLIC WORKS DEPARTMENT

NOTICE TO BIDDERS, PROPOSAL CONTRACT
AND SPECIFICATIONS
FOR THE CONSTRUCTION OF

Interim Fire Station No.7

SPECIFICATION NO. 2025-010

MAYOR
Jeanette Sanchez-Palacios

DEPUTY MAYOR
Doug Halter

COUNCILMEMBERS
Liz Campos
Ryyn Schumachjer
Bill McReynolds
Jim Duran
Alex Mangone

CITY MANAGER
Bill Ayub

CITY ATTORNEY
Javan N. Rad

CITY CLERK
Michael B. McDonald

BIDS TO BE OPENED ON

June 4, 2026

Jeff Hereford, P.E.
Acting City Engineer

Interim Fire Station No.7

Specification Number 2025-010

TABLE OF CONTENTS

NOTICE INVITING BIDS 1

INSTRUCTIONS TO BIDDERS 4

1. Obtaining Plans and Specifications 4
2. Plan Holders List 4
3. Review of Bid Documents 4
4. Changes to Bid Documents - Addenda 4
5. Bidder Licensing, Minimum Qualifications, and Debarment 5
6. Site Inspection 5
7. Prebid Conference 5
8. Proposal 5
9. Bid Items 6
10. Statement of Past Contract Disqualifications 6
11. Bidder's Self Performance 6
12. Iran Contracting Act of 2010 6
13. Non-Collusion Declaration 7
14. Public Works Contractor Registration Certification 7
15. Workers' Compensation Certification 7
16. Submitting Bid 7
17. Bid Guarantee 8
18. Bid Protests 9
19. Award of Contract 9
20. Subcontractors 10
21. Business License 10
22. Prevailing wages 10
23. Equal Employment Opportunity 11
24. Retainage 11
25. Local Sales Tax 11

PROPOSAL 12

Schedule of Work and Prices 14
Bidder's Statement of Subcontractors and Material Fabricators 16
Bidder's Qualification Statement 17
Bidder's Statement of Past Contract Disqualifications and Performance 27
Non-Collusion Declaration 31
Workers' Compensation Certification 32

AGREEMENT 33

INSURANCE AND BONDING REQUIREMENTS 37

Minimum Scope and Limit of Insurance 37
Self-Insured Retentions 37
Builder's Risk (Course of Construction) Insurance 38
Claims Made Policies 38

Umbrella or Excess Policies 39
Acceptability of Insurers 39
Waiver of Subrogation 39
Verification of Coverage 39
Subcontractors 40
Duration of Coverage 40
Surety Bonds 40
Faithful Performance Bond 41
Labor and Material Payment Bond 46

STANDARD SPECIFICATIONS 50

0 Use of Standard Specifications for Public Works 52
0-1 General 52
0-2 Numbering of Sections 52
0-3 Modifications 52
1 General 52
1-2 Terms and Definitions 52
1-3 Abbreviations 54
1-6 Bidding and Submission of The Bid 54
1-7 Award and Execution of The Contract 55
2 Scope of The Work 56
2-2 Permits 56
2-3 Right-Of-Way 56
2-9 Changed Conditions 56
2-10 Disputed Work 58
3 Control of The Work 58
3-2 Self Performance 58
3-3 Subcontractors 58
3-7 Contract Documents 59
3-10 Surveying 62
3-12 Work Site Maintenance 62
3-13 Completion, Acceptance, And Warranty 64
4 Control of Materials 65
4-3 Inspection 65
4-6 Trade Names 66
5 Legal Relations and Responsibilities 66
5-3 Labor 66
5-4 Insurance 68
5-8 Hazardous Material 73
6 Prosecution and Progress of the Work 74
6-1 Construction Schedule and Commencement of The Work 74
6-2 Prosecution of The Work 76
6-3 Time of Completion 76
6-4 Delays and Extensions of Time 77
6-9 Liquidated Damages 78
6-10 Disputes and Claims; Procedure 80
7 Measurement and Payment 86
7-2 Lump Sum Work 86

7-3 Payment 87
7-4 Payment For Extra Work 87
100-1 Termination of Agency Liability 88
400 Existing Improvements 89
402-2 Protection 89
402-4 Relocation 89
402-5 Delays Due To Utility Conflicts 89
SECTION 900 - GENERAL 93
SECTION 901 - MOBILIZATION 95
SECTION 902 - PUBLIC NOTIFICATION 95
SECTION 903 – WASTE DIVERSION 96
SECTION 904 – VIDEO RECORDING 99
SECTION 905 - TRAFFIC CONTROL 99
SECTION 906 - STORMWATER POLLUTION PREVENTION PLAN 104
SECTION 907 – DEMOLITION 106
SECTION 908 - EARTHWORK 107
SECTION 910 - COMPACTION TESTS 111
SECTION 911 – TRENCH SAFETY 112
SECTION 912 – TRENCHING 113
SECTION 913 – SIDEWALK 113
SECTION 914 – CURB RAMP, CROSS GUTTER AND SPANDREL 114
SECTION 915- SEWER LINE CONNECTION 119
SECTION 916- WATER SERVICE CONNECTION 120
SECTION 917- STORMWATER DRAINAGE 123
SECTION 918- CURB AND GUTTER 123
SECTION 919 - COMPACTION TESTS 124
SECTION 920 - CONCRETE MASONRY RETAINING WALL 125
SECTION 921 – CHAIN LINK FENCE 126
SECTION 922- RIGID CONCRETE PAVEMENT AND DRIVEWAY 128
SECTION 923 –CONCRETE STRUCTURAL FOUNDATION 128
SECTION 924–DETENTION BIOSWALE 129
SECTION 925 – LIGHTS 131
SECTION 926 – LANDSCAPE IRRIGATION 132
SECTION 927 – LANDSCAPE PLANTING 142
SECTION 928 – LANDSCAPE MAINTENANCE AND PLANT ESTABLISHMENT 154
SECTION 929 GENERAL ELECTRICAL 156
SECTION 930 – RESTORATION OF DAMAGED EXISTING IMPROVEMENTS 159
SECTION 931 – PREFABRICATED BUILDINGS 159
SECTION 932 – TRASH ENCLOSURE 162
SECTION 933 - TREE REMOVAL AND REPLACEMENT 162
SECTION 934 – RECORD OF CONSTRUCTION CHANGES 164
TECHNICAL SPECIFICTION 166

APPENDICES 513

Appendix A – Special Provisions for Work in the Public Right of Way 514
Appendix B– General Construction Permit Exemption Determination Sheet 521
APPENDIX C – SOIL REPORT 523
Appendix D – City Standard Details 637

APPENDIX E PERMITS 653
Appendix F– City Drawing File No. 2025-D-010 (151Sheets)..... 694

PROJECT PLANS: City Drawing No. 2025-D-010 containing 151 Sheets.

NOTICE INVITING BIDS

NOTICE IS HEREBY GIVEN that sealed bids are invited to be received as described herein before 2:00 p.m. on June 4, 2026 for the Interim Fire Station No.7 Project at which time they will be publicly opened and read. Only bids that comply with all the requirements in this Notice and the accompanying "Instructions to Bidders" will be accepted. Bids shall be valid for a period of 60 calendar days after the bid opening date.

Project Description. The project involves the preparation of a site for an interim fire station located at 2269 Alessandro Drive, covering an area of 1.9 acres. The site preparation includes soil remediation, rough grading, and concrete foundation and pavement installation. Additionally, plumbing, mechanical, and electrical work will be required to support the prefabricated modular buildings, which consist of an office, an apparatus bay, and a gym. The excavation will cover a footprint of 0.67 acres to a depth of 7 feet to lower the shallow groundwater level. After dewatering the site, a 10-foot layer of compacted soil will be used to refill the excavated area according to the rough grading. The contractor will install on-site utility services and route the electricity to a city-purchased generator. To manage on-site runoff, a bio-swale will be constructed to the south of the station, directing water into the existing 12-inch storm culvert. The existing entrance driveway will be replaced with new concrete pavement. An underground sewer clarifier will also be installed on the new pavement to handle wash water from the fire trucks. All related work will be carried out in accordance with Drawing No. 2025-D-010 and in compliance with the project specifications. The Engineer's Estimate for the cost of this project is $5,990,216.

Obtaining Bid Documents. Bid documents are only available through the online service Quest Construction Data Network (QuestCDN). Go to the City's website below and click on the "Projects Out to bid via QuestCDN link.

Projects Out to Bid: https://www.cityofventura.ca.gov/OnlineBids

Contact QuestCDN at (952) 233-1632 for information on how to use their service.

Bid Guarantee Required. No bid will be accepted that does not include a bid guarantee of not less than 10% of the bid amount. Additional information can be found in paragraph 17 in the "Instructions to Bidders."

Payment and Performance Bonds. The successful Bidder will be required to furnish a Faithful Performance Bond and a Labor and Material Payment Bond each in an amount equal to one hundred percent (100%) of the Contract Price. Each bond shall be in the forms set forth herein, shall be secured from a surety company that meets all State of California bonding requirements, as defined in California Code of Civil Procedure Section 995.120, and that is a California admitted surety insurer.

Contractor Licensing Required. No bid will be accepted from a contractor who is not licensed in accordance with the provisions of Chapter 9, Division 3 of the Business and

Professions Code. A Class A (General Engineering) or Class B (General Builder) licensed Contractor is required for this project Bids will not be accepted from contracts who do not have a Class A or a Class B license.

Prevailing Wages. Pursuant to Labor Code Section 1773, City has obtained the prevailing rate of per diem wages and the prevailing wage rate for holiday and overtime work applicable in Ventura County from the Director of the Department of Industrial Relations for each craft, classification, or type of worker needed to execute this contract. A copy of these prevailing wage rates may be obtained via the internet at: www.dir.ca.gov/dlsr. A copy of the prevailing rate of per diem wages is also available at the City's Public Works Department and shall be made available to interested parties upon request.

The successful bidder shall post a copy of the prevailing wage rates at each job site. It shall be mandatory upon the Bidder to whom the Contract is awarded, and upon any subcontractors, to comply with all Labor Code provisions, which include but are not limited to the payment of not less than the said specified prevailing wage rates to all workers employed by them in the execution of the Contract, employment of apprentices, hours of labor and debarment of contractors and subcontractors.

Contractor Registration. Pursuant to Labor Code sections 1725.5 and 1771.1, all contractors and subcontractors that wish to bid on, be listed in a bid proposal, or enter into a contract to perform public work must be registered with the Department of Industrial Relations. No Bid will be accepted, nor any contract entered into without proof of the contractor's and subcontractors' current registration with the Department of Industrial Relations to perform public work. If awarded a contract, the Bidder and its subcontractors, of any tier, shall maintain active registration with the Department of Industrial Relations for the duration of the Project. Notwithstanding the foregoing, the contractor registration requirements mandated by Labor Code Sections 1725.5 and 1771.1 shall not apply to work performed on a public works project that is exempt pursuant to the small project exemption specified in Labor Code Sections 1725.5 and 1771.1.

Labor Compliance. This Project is subject to compliance monitoring and enforcement by the Department of Industrial Relations. In bidding on this Project, it shall be the Bidder's sole responsibility to evaluate and include the cost of complying with all labor compliance requirements under this contract and applicable law in its Bid.

Substitution of Securities. Pursuant to Section 22300 of the Public Contract Code of the State of California, the successful Bidder may substitute certain securities for funds withheld by City to ensure its performance under the contract.

Contract Award. City shall award the contract for the Project to the lowest responsive, responsible Bidder as determined by the City from the lowest responsible bidder. City reserves the right to reject any or all bids or to waive any irregularities or informalities in

any bids or in the bidding process. The contract is estimated to be awarded on June 23, 2026. Additional information can be found in the “Instructions to Bidders”.

Contact the Project Manager, Ling Liu at 805-658-4791 with technical questions.

Date Issued: May 7, 2026

CITY OF SAN BUENAVENTURA, CALIFORNIA

INSTRUCTIONS TO BIDDERS

1. Obtaining Plans and Specifications

All Public Works projects out to bid may be viewed by clicking the links on the City's Capital Projects webpage at: https://www.cityofventura.ca.gov/1142/Capital-Projects

For this project, the project bid documents including the plans and specifications may be viewed and purchased using an online service called Quest Construction Data Network (QuestCDN) by clicking on the link below. The bid documents are free to view. Users must create a free account to download the bid documents. The cost to download the bid documents is $22.00. To access the electronic bid form, download the bidding documents and click the 'Online Bid' button or Online Bidding 'Available' button on the bid posting page. After the bid close, bidders will be charged a fee of $42.00 for successful bid submission. Costs are subject to change. All costs are paid to QuestCDN and not the City. Contact QuestCDN at (952) 233-1632 for additional information. The cost to obtain the bid documents in any specified format herein is non-refundable.

Online Bidding: https://www.cityofventura.ca.gov/OnlineBids

2. Plan Holders List

No bid will be accepted from a bidder who is not on the City's Plan Holder List (Plan Holder List). A bid received by a bidder not on the Plan Holder List will be deemed non-responsive. A prospective bidder is placed on the Plan Holders List when they purchase a set of plans and specifications as described in paragraph 1.

3. Review of Bid Documents

Bidders are encouraged to carefully review the plans and specifications for any errors, omissions, or ambiguities. If any suspected errors are discovered, notify the Project Engineer immediately. The City will determine if a written addenda is required.

4. Changes to Bid Documents - Addenda

The City may issue written addenda to the bid documents to correct an error or provide additional information. Written addenda shall be the sole means for modifying any of the bid documents prior to the bid opening. The City may, but is not obligated to, extend the bid opening date as part of issuing a written Addenda that materially changes the work to be bid. No bid will be accepted that does not include written acknowledgement of all addenda that materially change the work being bid as determined by the City.

The City shall not be bound by oral communications purportedly modifying or interpreting the plans and/or specifications regardless of when or by whom such oral communications are made, and the bidder should not rely upon any such oral communications when preparing a bid.

Addenda, if any, issued during the bid period will be issued via QuestCDN to all prospective bidders on the Plan Holders List. See paragraph 2 for information on the Plan Holders List.

5. Bidder Licensing, Minimum Qualifications, and Debarment

No bid will be accepted from a contractor who is not licensed in accordance with the provisions of Chapter 9, Division 3 of the Business and Professions Code. The Contractor's license classification required for this project is Class B, and the Contractor should contract with a Class A subcontractor.

No bid will be accepted from a bidder that does not complete the Bidder's Qualifications Statement in the Bidder's Proposal. A Bidder's Qualifications Statement that, as determined by the City Engineer, does not meet the specified requirements, provide enough information to make a determination, or contains information that is determined to be incorrect or falsified, will cause the bid to be considered non-responsive and rejected.

No bid will be accepted from a bidder who is listed on the State of California Department of Industrial Relations DLSE Debarment list located at www.dir.ca.gov/dlse/debar.html.

6. Site Inspection

Since not all existing conditions information can be included in the bid documents, all prospective bidders and subcontractors are highly encouraged to inspect the project site. The inspection of areas not accessible to the public should be made during the non-mandatory bid conference below. Additional access may be provided as City operations and staff availability allow. All site inspections must be conducted in such a manner as to not interfere with City operations or be disruptive to the public.

7. Prebid Conference

A non-mandatory prebid conference will be held with City representatives, including the design engineer, to discuss the project and answer questions. This non-mandatory conference will be held at 10:00 AM. on May 21, 2026, at 2269 Alessandro Drive Prospective bidders and subcontractors are highly encouraged to attend and participate in the conference. At such time, areas of the project site will be made available to all prospective bidders and subcontractors to view. Failure to attend the non-mandatory prebid conference will not be accepted by the City as a basis for making a claim of bid error.

8. Proposal

Accompanying these specifications, and made a part hereof, is a set of plans and forms for the proposal designated "PROPOSAL." Blank spaces in the Proposal shall be properly filled in and the phraseology thereof shall not be changed. Additions shall not be made to the items mentioned therein. Any unauthorized conditions, limitations, or provisions attached to the Proposal will be liable to render it informal and may cause its rejection. Alterations by erasure or interlineation shall be explained or noted in the Proposal over the signature of the bidder.

In the event a bidder incorrectly multiplies estimated quantities with unit prices for a line-item extension total, the unit price indicated in the bid schedule submitted at the time of bid shall prevail. In the event the Total for comparison of bids is incorrect, the correct total will be used for comparison of bids and to determine the apparent low bidder. Each bidder shall state in the Proposal the bidder's contractor license number and the license's expiration date. Any Proposal not containing this information shall be considered non-responsive and shall be rejected.

Each bidder shall state in the Proposal the extent of bidder's experience and give some reference that will enable the City to investigate the bidder's experience, skill and business standing, if necessary and any Proposal not complying with this requirement may be rejected without further consideration.

9. Bid Items

The bids will be based upon full completion of all the work as shown on the plans and specified. It is expressly understood that the plans are drawn with as much accuracy as is possible in advance, but should errors, omissions or discrepancies exist in the plans which show conditions that vary from those encountered in construction, the Contractor specifically agrees to construct a completed work ready for the use and in the manner which is intended. The bids for the work are intended to establish a total cost for the work in its entirety. Should the Contractor feel that the cost for the work has not been established by specific items in the bid form, the costs for that work shall be included in some related bid item so that the proposal for the project does reflect the total cost for completing the work in its entirety. In the event of increasing or decreasing of work, the total amount of work actually done, or materials or equipment furnished shall be paid for according to the unit or lump sum price established for such work under the contract, wherever such unit or lump sum price has been established. In the event no prices are named in the contract to cover such changes or alterations, the cost of such changes shall be covered as hereinafter provided for extra work.

10. Statement of Past Contract Disqualifications

Each bidder shall fill out the "Bidders Statement of Past Contract Disqualifications" form stating any and all instances of contract disqualifications due to a violation of a law or safety regulation. The bidder shall explain the circumstances of each disqualification. The City reserves the right to reject the bid based on such information.

11. Bidder’s Self Performance

The bidder (General Contractor) must perform contract work amounting to at least 15% percent of the Contract Price, not including costs associated with the following designated specialty items in accordance with Section 3-2 of the Standard Specification for Public Work Construction, 2018 edition:

- No designated subcontractor specially items.

12. Iran Contracting Act of 2010

In accordance with Public Contract Code Section 2200 *et seq*., the City requires that any person that submits a bid or proposal or otherwise proposes to enter into or renew a contract with the City with respect to goods or services of one million dollars

($1,000,000) or more, certify at the time the bid is submitted or the contract is renewed, that the person is not identified on a list created pursuant to subdivision (b) of Public Contract Code Section 2203 as a person engaging in investment activities in Iran described in subdivision (a) of Public Contract Code Section 2202.5, or as a person described in subdivision (b) of Public Contract Code Section 2202.5, as applicable. The form of such Iran Contracting Certificate is included in the Proposal section of this bid package and must be signed and dated under penalty of perjury. For bids of $1,000,000 or more, bidders must include their properly completed Iran Contracting Certification form with their proposal at the time of bid. Failure to do so may result in the bid being determined to be non-responsive.

13. Non-Collusion Declaration

Bidders on all public works contracts are required to submit a declaration of non-collusion with their bid. This form is included in the Proposal section of this bid package and must be signed and dated under penalty of perjury.

14. Public Works Contractor Registration Certification

Pursuant to Labor Code sections 1725.5 and 1771.1, all contractors and subcontractors that wish to bid on, be listed in a bid proposal, or enter into a contract to perform public work must be registered with the Department of Industrial Relations. No bid will be accepted, nor any contract entered into without proof of the contractor's and subcontractors' current registration with the Department of Industrial Relations to perform public work. If awarded a contract, the bidder and its subcontractors, of any tier, shall maintain active registration with the Department of Industrial Relations for the duration of the Project. To this end, Bidder shall sign and submit with its Bid the Public Works Contractor Registration Certification on the form provided, attesting to the facts contained therein. Failure to submit this form may render the bid non-responsive. In addition, each Bidder shall provide the registration number for each listed subcontractor in the space provided in the Designation of Subcontractors form.

15. Workers' Compensation Certification

In accordance with the provisions of Labor Code Section 3700, Contractor shall secure the payment of compensation to its employees. Contractor shall sign and file with the City the following certificate prior to performing the work under this Contract:

> *I am aware of the provisions of Section 3700 of the Labor Code, which require every employer to be insured against liability for workers' compensation or to undertake self-insurance in accordance with the provisions of that code, and I will comply with such provisions before commencing the performance of the work of this contract.*

The form of such Workers' Compensation Certificate is included in the Proposal Section of this bid package.

16. Submitting Bid

The City reserves the right to retain all bids for a period of 60 days for examination and comparison, and to delete any portion of the work from the contract. The City reserves the right to reject any and all bids for any reason and to waive any informality in such bids.

All bids shall be submitted via the online service, QuestCDN, described in Paragraph 1 before 2:00 P.M. on June 4, 2026, The system will not accept bids after the specified date and time. No other bids will be accepted. Contact QuestCDN at (952) 233-1632 for additional information.

17. Bid Guarantee

Each bid shall be accompanied by a bid guarantee in an amount not less than ten percent (10%) of the total amount of the bid, as a guarantee that the bidder will enter into the proposed contract if awarded. The bid guarantee shall be in one of the following forms:

1. Certified or Cashier's Check payable to the order of the City of San Buenaventura; or

2. Bid Bond payable to the City of San Buenaventura executed by a corporate surety authorized to do business in the State of California, submitted in one of the following two ways:

    - A certified electronic copy of a bid bond, submitted with the bid. The certified electronic copy shall contain the issuing company's corporate seal and include language with these or similar words:
      "[Name of issuing company] considers the electronic image of the following corporate seal that is affixed to the bond(s) to be of the same effect as if the seal was physically stamped or impressed onto the bond(s)."
    - A bid bond submitted electronically through the Surety2000 service at: https://surety2000.com.

The certified or cashier's check, or bid bond, and the proceeds thereof, will become the property of the City of San Buenaventura if the bidder fails to, or refuses to, execute the Contract and to furnish satisfactory bonds within twenty (20) days after the Contract is awarded. The check or bond accompanying the successful bid will be returned upon execution of the Contract and the filing of satisfactory bonds. Checks or bonds accompanying rejected bids will be returned upon award of the Contract.

If a certified or cashier's check is submitted, it shall be enclosed in a sealed envelope clearly labeled with the project title, name of bidder, and date and time of bid opening, and shall be delivered prior to the bid opening date and time to:

City of Ventura
City Clerk's Office
501 Poli Street, Post Office Box 99
Ventura, California 93001

A certified or cashier's check bid guarantee may be hand delivered or sent by certified mail.

Bids may only be submitted electronically through the QuestCDN platform in accordance with Section 16, “Submitting Bid,” of the Instructions to Bidders. Any bid received through QuestCDN without a corresponding bid guarantee received by one of the forms listed above prior to the deadline for bid opening will be deemed nonresponsive.

18. Bid Protests

After the bid opening, any bidder may file a bid protest. The bid protester must follow the City of San Buenaventura Public Works Construction Contract Bid Protest Procedure. Failure to follow these instructions shall render a bid protest invalid. A copy of these procedures is available on the City’s website at:

https://www.cityofventura.ca.gov/1142/Capital-Projects

19. Award of Contract

The City Council will award the contract to the lowest responsible bidder or bidders complying with all instructions and with the provision of the advertised Notice Inviting Bids. The competency and responsibility of bidders as evidenced by the information accompanying the proposals, which will be subject to verification, will be considered in determining the responsibility of the bidder and in making the award.
All bids are to be compared on the basis of the Engineer's estimate of the quantities of work to be done.

The bidder to whom the contract is awarded by the City shall execute the contract and furnish a surety bond on the form set forth herein in the amount of 100% of the contract price guaranteeing the faithful performance of the contract. An additional bond for 100% of the contract price shall be furnished on the form set forth herein to secure the payment of claims for labor and materials furnished for the work.

The City reserves the right to waive any irregularities in the bids received.

Before any contract is awarded, the bidder may be required to furnish a complete statement of the origin, composition, and manufacturer of any or all materials to be used in the construction of the work, together with samples, which samples may be subjected to the tests provided for in these specifications or in the special provisions to determine their quality and fitness of the work.

The bidder to whom award is made shall provide Performance and Payment bonds and insurance certificates and endorsements satisfactory to the City meeting the contract requirements and shall execute a written contract with the City within twenty (20) calendar days after notice of the award has been sent by mail to them at the address given in their proposal. The contract shall be made in the form adopted by the City and incorporated in these specifications.

If the bidder to whom award is made fails to enter into a contract and provide the requisite bonds and evidence of insurance as herein provided, the award will be annulled, the bid bond or security will be forfeited by the bidder, and an award may be

made to the next lowest responsible bidder, and such bidder shall fulfill every stipulation embraced herein as if they were the party to whom the first award was made. The notice inviting bids, proposal, bonds, plans, special provisions, and standard specifications, shall be considered as incorporated in the contract. A corporation to which an award is made will be required before the contract is finally executed, to furnish evidence of its corporate existence and evidence that the officer signing the contract and bonds for the corporation is duly authorized to do so.

The contractor shall not assign, transfer, convey or otherwise dispose of the contract, or their right, title of interest therein, or their power to execute such contract to any other person, firm or corporation without previous consent in writing by the City Council of the City of San Buenaventura.

20. Subcontractors

If any part of the work to be done under this contract is subcontracted, the subcontract shall be in writing and shall provide that all work to be performed thereunder shall be performed in accordance with the terms of the general contract. Upon request, certified copies of any or all subcontracts shall be furnished to the City Engineer and the City Council. The subcontracting of any or all of the work to be done will in no way relieve the Contractor of any part of their responsibility under the contract.

Violation of any of the above provisions will be considered a violation of the contract, and the City may: cancel the contract, assess the contractor a penalty of not more than 10 percent of the subcontract involved, or cancel the contract and assess the penalty.

All persons engaged in the work, including subcontractors, will be considered as employees of the Contractor. The Contractor will be held responsible for their work. The City will deal directly with and make all payments to the prime contractor.

When subcontracted work is not being prosecuted in a manner satisfactory to the Engineer, the Contractor shall be notified to take corrective action. The Engineer may report the facts to the City Council. If the City Council so orders and on receipt by the Contractor of written instructions from the Engineer, the subcontractor shall be removed immediately from the work. The subcontractor shall not be re-employed on the work.

21. Business License

Before entering into a contract, the Contractor shall present satisfactory evidence that themselves and their subcontractor(s) have paid the business license fee(s) of the City of San Buenaventura.

22. Prevailing wages

This project requires payment of State prevailing rates of wages for Ventura County. The contractor shall post copies of the prevailing schedule at each job site. Copies of these rates of wages are available from the State of California Department of Industrial

Relations Prevailing Wage Unit. The website for this agency is located at www.dir.ca.gov.

This project is subject to prevailing wage compliance monitoring and enforcement by the Department of Industrial Relations. No contractor or subcontractor may be listed on the bid proposal unless registered with the Department of Industrial Relations, pursuant to Labor Code Section 1725.5. No bid will be accepted from a Contractor without proof of the Contractor's and subcontractor's current registration.

23. Equal Employment Opportunity

The contractor to whom the contract is awarded shall assist in locating, qualifying, hiring and increasing the skills of minority group employees and applicants for employment, as set forth in Executive Order 11246 and 11375.

24. Retainage

Pursuant to Public Contract Code Section 7201, five percent (5%) will be deducted from each progress payment and retained by the City and the remainder less the amount of all previous payments will be paid to the Contractor.

Pursuant to Public Contract Code ("PCC") § 22300, the Contractor may substitute securities for retention monies held by the City or request that the City place such monies into an escrow account. The Contractor is notified, pursuant to PCC § 22300, any such election will be at the Contractor's own expense and will include costs incurred by the City to accommodate the Contractor's request. City and Contractor agree to utilize the approved as to form escrow agreement prepared by the City which is substantially similar to the form within the PCC. A copy may be examined if requested.

25. Local Sales Tax

Reference is made to Regulation 1806 of the Uniform Local Sales and Use Tax Regulations. By signing the Agreement for this Contract, the Contractor agrees to allocate all qualifying local sales and use tax derived from this construction contract to the local tax jurisdiction (City of San Buenaventura). The Contractor and subcontractors must obtain sub-permits and allocate qualifying sales and use tax to the construction project location using Schedule C of their sales and use tax return (see Appendix III for sample form). More information on allocating sales and use tax to the project location can be found in Appendix III of the specifications and on the California Board of Equalization website at http://www.boe.ca.gov.

PROPOSAL

Interim Fire Station No.7

Specification Number 2025-010

Including 151 Sheet(s) of Plans

Bids To Be Received On June 4, 2026, at 2:00 p.m.

Completion Time: 350 Consecutive Calendar Days (Sec. 6-3)

Liquidated Damages:

A. Failure to Complete Work on Time: $750 per Calendar Day (Sec. 6-9.1)

B. Failure to Keep Traffic Lanes open: $62.5 per hour per lane [Sec. 6-9.2(a)]

C. Disruption of the City traffic signal control system: $750 per Calendar Day [Sec. 6-9.2(b-g)]

D. Failure to Replace Temporary Resurfacing within 30 Calendar Days: $750 per Calendar Day (Sec. 6-9.3)

E. Failure to Reestablish Water Service: $750 per hour (Sec. 6-9.4)

Number of Sheet(s) in Proposal: 21

CONTRACTOR

Name _____

Street Address _____

City _____ State _____ Zip Code _____

Telephone Number_____

Email_____

Department of Industrial Relations Registration Number _____

Use Fillable Form. Downloadable after online bidding fees are paid.

PROPOSAL

Interim Fire Station No.7

Specification Number 2025-010

To the City Council
City of San Buenaventura
Ventura, California

Pursuant to the foregoing notice inviting bids, the undersigned declares that the undersigned has carefully examined the location of the proposed work, that the undersigned has examined the plans and specifications and read the accompanying instructions to bidders, and hereby proposes to furnish all materials and to do all the work required to complete the said work in accordance with said plans and specifications for the prices set forth in the following proposed schedule.

The undersigned further agrees that in case of default in executing the required contract, with necessary bonds, within twenty (20) days, not including Sunday, after having received notice that the contract is ready for signature, the proceeds of the check of bond accompanying the bid shall become the property of the City of San Buenaventura.

The bidder by signature below also certifies under the penalty of perjury that the representations made in this bid are true and accurate in accordance with the Business and Professions Code Section 7028.15(e).

Licensed in accordance with an act providing for the registration of Contractors, License No. _____ and Expiration Date _____.

Type _____.

Signature of Bidder_____

(If an individual, so state. If a firm or co-partnership, state the firm name and give the names of all individuals or co-partners composing the firm. If a corporation, state legal name or corporation, also names of president, secretary, treasurer and manager thereof.)

Use Fillable Form.
Downloadable after online
bidding fees are paid.

DATED: _____, 20

SCHEDULE OF WORK AND PRICES

Item	Description	Reference	Qty	Unit	Unit Price	Total
1	Unclassified Excavation	908-9	12545	CY[F]*		
2	Unclassified fill	908-9	22930	CY[F]*		
3	Geotextile Separation	908-9	1077	CY[F]*		
4	Subgrade Preparation	908-9	2448	CY[F]*		
5	Concrete Structural Foundation	923-3	590.6	CY		
6	Rigid Concrete Pavement and Driveway, Cross Gutter and Spandrel, Curb & Gutter	922-2, 914-6.2, 918-3	1403	CY		
7	Sidewalk	913-3	5090	SF		
8	Curb Ramp	914-6.1	6	EA		
9	Concrete Masonry Retaining Wall	920-4.1	103	CY		
10	Concrete V-Ditch	920-4.2	262	LF		
11	Catch Basin	917-2.2	8	EA		
12	Storm Drain (6-inch)	917-2.1	587	LF		
13	Storm Drain (4-inch)	917-2.1	128	LF		
14	Water Service Connection (HDPE)	916-3.1	580	LF		
15	Backflow Assembly (with Cage)	916-3.2	2	EA		
16	Fire Service Connection (outdoor)	916-3.3	400	LF		
17	Adjust Hydrant to Grade	916-3.2	2	EA		
18	Sewer Line Connection (6-inch)	915-5.1	68	LF		
19	Sewer Line Connection (4-inch)	915-5.1	865	LF		
20	Chain Link Fence	921-7	570	LF		
21	Landscape Irrigation	926-4	24200	SF		
22	Fire Hydrant	916-3.2	1	EA		
23	Detention Bioswale	924-4	330	CY		
24	Trash Enclosure	932-2	222	SF		
25	Landscape Planting	927-3	17591	SF		

Use Fillable Form. Downloadable after online bidding fees are paid.

26	Slope Planting and Erosion Control	927-3	6609	SF		
27	Tree Removal and Replacement	933-4	1	LS		
28	Electric Commercial Water Heater	931-2	1	LS		
29	Sewer Clarifier	915-5.2	1	LS		
30	Demolition	907-5	1	LS		
31	Seismic Expansion Joint	931-2	1	LS		
32	Fire Alerting Dispatching System	931-2	1	LS		
33	Fire Alarm System	931-2	1	LS		
34	Fire Sprinkler	931-2	1	LS		
35	Plumbing (Indoor)	931-2	1	LS		
36	Telecom Line Connection	931-2	1	LS		
37	Washdown Diversion System	915-5.2	1	LS		
38	Lights	925-4	1	LS		
39	Control of Groundwater	909-3	1	LS		
40	Mechanical	931-2	1	LS		
41	Electrical	929-7	1	LS		
42	Waste Diversion	903-3	1	LS		
43	Traffic Control	905-11	1	LS		
44	Storm Water Pollution Prevention Plan	906-4	1	LS		
45	Existing Structure Restoration	930-2	1	LS	20,000	$20,000
46	Mobilization	901-2	1	LS	275,000	$275,000
47	Record of Construction Change	934-5	1	LS	8,000	$8,000
					Total	

** Final Pay [F] items in bid schedule shall not be measured for payment in field, but shall be based upon original ground lines and pay lines indicated on project plans. No additional payment shall be made for measured quantities that vary from quantities on proposal/bid schedule.*

The unit prices to be used in this bid schedule are the unit prices proposed by the Contractor through the QuestCDN online bidding process

_____
CONTRACTOR'S NAME

Use Fillable Form. Downloadable after online bidding fees are paid.

BIDDER'S STATEMENT OF SUBCONTRACTORS AND MATERIAL FABRICATORS

Without exception, the bidder is required to state the name and address of each subcontractor or material fabricator, and the portion of the work which each will do as required by Section 1-6.2 hereinafter and in conformance with Public Contract Code, Section 4100 to 4113, inclusive.

The undersigned submits herewith a list of subcontractors and material fabricators whom the bidder proposes to employ on the work with the proper firm name and business address of each. Attach additional sheets as necessary.

Name Under Which Subcontractor is Licensed	License Number	Dept. of Industrial Relations Registration Number	Address of Office Mill or Shop	Specific Description of Subcontract

Use Fillable Form. Downloadable after online bidding fees are paid.

Signature of Bidder

BIDDER'S QUALIFICATION STATEMENT

The bidder is required to complete the forms provided herein to enable the City to determine the Bidder's responsibility, experience, and skill. Line items that are not applicable shall be marked "N/A." Whenever a reference is indicated, provide the name of the contact person directly involved with the work that represented the owner, or the prime contractor if the work performed by your organization was done as a subcontract. ***DO NOT WRITE "SEE ATTACHED" UNLESS REQUIRED TO LIST ADDITIONAL PROJECTS THAT CANNOT FIT ON THE FORMS PROVIDED. YOU MUST BE CERTAIN TO INCLUDE THE SAME INFORMATION IN THE ATTACHMENTS THAT IS BEING REQUESTED IN THESE FORMS.***

Any proposal not adequately completed to the satisfaction of the City Engineer or containing information that is determined to be incorrect or falsified may be considered non-responsive and may be rejected.

BIDDER PROJECT EXPERIENCE REQUIREMENTS

A bidder will be considered "experienced" and responsible if the prime contractor (bidder) meets the licensing requirements and has been in business for at least five (5) years (either current business name or if the proposed project manager for the bidder has applicable experience with others) providing two construction experience of modular building or public safety facility that included structural foundation, mechanical, plumbing and electrical works, each valued at $1,000,000 or with a combined construction value of at least $2,000,000. These projects must have been performed in existing/developed commercial, industrial or residential neighborhoods. In addition, either the prime contractor (bidder) or listed subcontractors have successfully completed the scope of work for the building facility. The City **WILL** reject any bid that does not meet all of these qualification requirements.

The undersigned certifies under oath the truth and correctness of all statements and of all answers to questions made hereinafter.

Use Fillable Form. Downloadable after online bidding fees are paid.

ORGANIZATION

BIDDER: _____

ADDRESS OF BIDDER'S PRINCIPAL OFFICE:

_____

1. Type of Organization: CORPORATION☐ PARTNERSHIP☐ INDIVIDUAL☐ JOINT VENTURE ☐ OTHER ☐ _____

2. a. If a corporation, answer the following questions:

Date of Incorporation:_____

Place of Incorporation:_____

President's name:_____

Vice President's name(s):_____

_____

_____

Secretary or Clerk's name:_____

Treasurer's name:_____

Authorized Signatory(ies):_____

_____

Title(s):_____

b. If a partnership, answer the following questions:

Type of Partnership (Limited or General):_____

Date of Organization:_____

Location where partnership formed:_____

Names and addresses of all partner(s):_____

_____

Use Fillable Form. Downloadable after online bidding fees are paid.

Authorized Signatory(ies):_____

_____

_____

c. If an individual, answer the following questions: _____

Date of Organization:_____

Location where partnership formed:_____

Authorized Signature:_____

d. If a joint venture, answer the following questions: _____

Date of Formation:_____

Place of Formation:_____

Authorized Signatory(ies) :_____

Name and address of projects completed as a joint venture: _____

Name:_____

Address:_____

Client: _____

Architect:_____

Construction Contract Amount: _____

Name:_____

Address: _____

Client: _____

Architect: _____

Construction Contract Amount: _____

Use Fillable Form. Downloadable after online bidding fees are paid.

Name:_____

Address: _____

Client: _____

Architect: _____

Construction Contract Amount: _____

In what states are the joint venture partners qualified to do business: _____

EXPERIENCE

3. List two construction projects that your firm successfully completed that meet the criteria described in the paragraph above under "**BIDDER PROJECT EXPERIENCE REQUIREMENTS.**"

   a. Project Name:_____

   Brief Description of the Work:

   _____
   _____
   _____
   _____
   _____
   _____

   Did you perform as the Prime Contractor of this project? Yes ___ No ___

   Owner and Address:_____

   _____

   Contact Person and Title: _____

   Phone Number: _____

   Date of Completion: _____

   Final Cost for the Work: $ _____

   Percentage of the cost of work performed with Bidder's forces: _____

   Change Orders as a percent of base contract: _____

Use Fillable Form. Downloadable after online bidding fees are paid.

b. Project Name:_____

Brief Description of the Work:

_____
_____
_____
_____
_____
_____

Did you perform as the Prime Contractor of this project? Yes ___ No ___

Owner and Address:_____

_____

Contact Person and Title:_____

Phone Number: _____

Date of Completion: _____

Final Cost for the Work: $ _____

Percentage of the cost of work performed with Bidder's forces: _____

4. List at least two electrical improvements or one repair work which you OR your listed subcontractor (if applicable) has completed within the last five years. All or a portion of the electrical work may have been implemented by a subcontractor, if you were a Prime on the Project:

a. Project Name:_____

Brief Description of the Work:

_____
_____
_____
_____
_____
_____

Who performed this work?

Prime Contractor ____
Listed Subcontractor ____

Project Owner and Address: _____

Use Fillable Form. Downloadable after online bidding fees are paid.

_____

Contact Person and Title:_____

Phone Number: _____

Date of Completion: _____

b. Project Name:_____

Brief Description of the Work:

_____
_____
_____
_____
_____
_____

Did you perform as the prime contractor of this project? Yes ___ No ___

Subcontractor that implemented the work if not done by your forces:

_____

Project Owner and Address: _____

_____

Contact Person and Title: _____

Phone Number: _____

5. What type (trade) of work and approximately what percentage of work are normally performed by your own forces on a project? _____

_____
_____
_____
_____

6. List the construction projects in excess of $1,000,000 your organization has in progress as of this date:

a. Project Name:_____

Brief Description of the Work:

_____
_____

Use Fillable Form. Downloadable after online bidding fees are paid.

_____
_____
_____
_____

Owner and Address:_____

_____

Contact Person and Title:_____

Phone Number: _____

Percentage Complete: _____

Scheduled Completion Date: _____

b. Project Name:_____

Brief Description of the Work:

_____
_____
_____
_____
_____
_____

Owner and Address:_____

_____

Contact Person and Title:_____

Phone Number: _____

Percentage Complete: _____

Scheduled Completion Date: _____

c. Project Name:_____

Brief Description of the Work:

_____
_____
_____
_____
_____
_____

Use Fillable Form.
Downloadable after online
bidding fees are paid.

Owner and Address:_____

_____

Contact Person and Title:_____

Phone Number: _____

Percentage Complete: _____

Scheduled Completion Date: _____

d. Project Name:_____

Brief Description of the Work:

_____
_____
_____
_____
_____
_____

Owner and Address:_____

_____

Contact Person and Title:_____

Phone Number: _____

Percentage Complete: _____

Scheduled Completion Date: _____

e. Other Projects: Attach Additional Sheets if Necessary

f. Given your firms current contractual commitments on other Projects, are you confident that you have the bonding capacity as well as manpower, equipment and material resources to perform this Contract within the time specified?

Yes _____ No _____

7. List subcontractors that will perform work that amounts to more than ten percent (10%) of the work (Total Bid). **Technical ability and experience information shall also be submitted for subcontractors who perform contract work that amounts to more than ten percent (10%) of the work within 5 working days of City's request for the information after the time and date of the bid**

Use Fillable Form. Downloadable after online bidding fees are paid.

opening, if such a request is made. Failure to submit any of the information requested herein may be cause for rejection of the bid by the City. Attach additional sheets as necessary.

Use Fillable Form.
Downloadable after online
bidding fees are paid.

AUTHORIZED SIGNATURE

Signature of Bidder: _____

Date at _____ This _____ day of _____ , _____

Name of Organization: _____

By: _____

Title: _____

_____ being duly sworn disposes and

says that he/she is the _____

of _____

Contractor(s), and that answers to the foregoing questions and all statements therein

contained are true and correct.

NOTARY ACKNOWLEDGEMENT

Subscribed and sworn before me this _____ day of _____, _____.

Notary Public: _____

My Commission Expires: _____

Use Fillable Form.
Downloadable after online
bidding fees are paid.

BIDDER'S STATEMENT OF PAST CONTRACT DISQUALIFICATIONS AND PERFORMANCE

The bidder is required under Section 14310.5 of the Government Code to state any and all instances of being disqualified, removed, or otherwise prevented from bidding on, or completing a federal, state, or local government project due to a violation of a law or safety regulation.

1. Have you ever been disqualified from any government contract?

   Yes ___ No ____

2. Have you had a Performance Bond pulled by an Owner/Agency in order to complete work that your firm could not or would not complete within the last 5 years?

   Yes ___ No ____

3. If yes to either of the above, explain the circumstances.

_____
_____
_____
_____
_____
_____
_____
_____
_____
_____
_____
_____

_____
Signature of Bidder

Use Fillable Form. Downloadable after online bidding fees are paid.

Iran Contracting Act Verification Form

(To Be Executed By Bidder and Submitted With Bids of $1,000,000 or greater)

Prior to bidding on, submitting a proposal or executing a contract or renewal for a State of California contract for goods or services of $1,000,000 or more, a vendor must either: a) certify it is not on the current list of persons engaged in investment activities in Iran created by the California Department of General Services ("DGS") pursuant to Public Contract Code section 2203(b) and is not a financial institution extending twenty million dollars ($20,000,000) or more in credit to another person, for 45 days or more, if that other person will use the credit to provide goods or services in the energy sector in Iran and is identified on the current list of persons engaged in investment activities in Iran created by DGS; or b) demonstrate it has been exempted from the certification requirement for that solicitation or contract pursuant to Public Contract Code section 2203(c) or (d). The DGS list of entities prohibited from contracting with public entities in California per the Iranian Contracting Act, 2010, can be found at:

https://www.dgs.ca.gov/PD/Resources/Page-Content/Procurement-Division-Resources-List-Folder/List-of-Ineligible-Businesses

Pursuant to Public Contract Code sections 2203(c) and (d), a public entity may permit a vendor/financial institution engaged in investment activities in Iran, on a case-by-case basis, to be eligible for, or to bid on, submit a proposal for, or enters into or renews, a contract for goods and services. Exemptions may be approved by the DGS.

To comply with this requirement, complete one of the two options on the following pages and submit your completed verification form with your bid. A bid that does not include the Iran Contracting Act Verification Form may be rejected as non-responsive as determined by the City Engineer. Please note: California law establishes penalties for providing false certifications, including civil penalties equal to the greater of $250,000 or twice the amount of the contract for which the false certification was made; contract termination; and three- year ineligibility to bid on contracts. (Public Contract Code section 2205.)

Option #1 is used for the bidder to certify that they are not on the current list of persons engaged in investment activities in Iran created by the California Department of General Services.

Option #2 is used if the bidder has obtained an exemption from the certification requirement under the Iran Contracting Act. A copy of the exemption must be included with the bid.

Use Fillable Form. Downloadable after online bidding fees are paid.

IRAN CONTRACTING ACT VERIFICATION FORM

OPTION #1 - Certification

I, the official named below, certify I am duly authorized to execute this certification on behalf of the vendor/financial institution identified below, and the vendor/financial institution identified below is not on the current list of persons engaged in investment activities in Iran created by DGS and is not a financial institution extending twenty million dollars ($20,000,000) or more in credit to another person/vendor, for 45 days or more, if that other person/vendor will use the credit to provide goods or services in the energy sector in Iran and is identified on the current list of persons engaged in investment activities in Iran created by DGS.

Vendor Name/Financial Institution (Printed)	*Federal ID Number (or n/a)*
By (Authorized Signature)	
Printed Name and Title of Person Signing	
Date Executed	*Executed in*

Use Fillable Form. Downloadable after online bidding fees are paid.

IRAN CONTRACTING ACT VERIFICATION FORM

OPTION #2 - Exemption

I, the official named below, certify I am duly authorized to execute this certification on behalf of the vendor/financial institution identified below, and the vendor/financial institution identified below has obtained an exemption from the certification requirement under the Iran Contracting Act. Attached is documentation from DGS demonstrating the exemption approval.

Vendor Name/Financial Institution (Printed)	*Federal ID Number (or n/a)*
By (Authorized Signature)	
Printed Name and Title of Person Signing	
Date Executed	*Executed in*

Use Fillable Form. Downloadable after online bidding fees are paid.

NON-COLLUSION DECLARATION

(To Be Executed By Bidder and Submitted With Bid)

I, the official named below, certify I am duly authorized to execute this declaration on behalf of the vendor/financial institution identified below.

This bid is not made in the interest of, or on behalf of, any undisclosed person, partnership, company, association, organization, or corporation. The bid is genuine and not collusive or sham. The bidder has not directly or indirectly induced or solicited any other bidder to put in a false or sham bid. The bidder has not directly or indirectly colluded, conspired, connived, or agreed with any bidder or anyone else to put in a sham bid, or to refrain from bidding. The bidder has not in any manner, directly or indirectly, sought by agreement, communication, or conference with anyone to fix the bid price of the bidder or any other bidder, or to fix any overhead, profit, or cost element of the bid price, or of that of any other bidder. All statements contained in the bid are true. The bidder has not, directly or indirectly, submitted their bid price or any breakdown thereof, or the contents thereof, or divulged information or data relative thereto, to any corporation, partnership, company, association, organization, bid depository, or to any member or agent thereof, to effectuate a collusive or sham bid, and has not paid, and will not pay, any person or entity for such purpose.

Any person executing this declaration on behalf of a bidder that is a corporation, partnership, joint venture, limited liability company, limited liability partnership, or any other entity, hereby represents that they have full power to execute, and does execute, this declaration on behalf of the bidder.

I declare under penalty of perjury under the laws of the State of California that the foregoing is true and correct.

Vendor Name/Financial Institution (Printed)	*Federal ID Number (or n/a)*
By (Authorized Signature)	
Printed Name and Title of Person Signing	
Date Executed	*Executed in*

Use Fillable Form. Downloadable after online bidding fees are paid.

WORKERS' COMPENSATION CERTIFICATION

(To Be Executed By Bidder and Submitted With Bid)

I, the official named below, certify I am duly authorized to execute this declaration on behalf of the vendor/financial institution identified below.

I am aware of the provisions of Section 3700 of the Labor Code, which require every employer to be insured against liability for workers' compensation or to undertake self-insurance in accordance with the provisions of that code, and I will comply with such provisions before commencing the performance of the work of this contract.

I declare under penalty of perjury under the laws of the State of California that the foregoing is true and correct.

Vendor Name/Financial Institution (Printed)	*Federal ID Number (or n/a)*
By (Authorized Signature)	
Printed Name and Title of Person Signing	
Date Executed	*Executed in*

Use Fillable Form. Downloadable after online bidding fees are paid.

AGREEMENT

FOR CONSTRUCTION OF PUBLIC WORKS

BETWEEN

THE CITY OF SAN BUENAVENTURA AND

_____

This AGREEMENT is entered into this _____ day of ____, 20__, by and between the CITY OF SAN BUENAVENTURA, a charter city and municipal corporation ("the City") and _____ ("the Contractor").

The City and the Contractor agree as follows:

1. WORK. The Contractor will provide all work required by the Contract Documents (the "Work"). The Contractor agrees to do additional Work arising from changes ordered by the City in accordance with the Specifications.

2. CONTRACT DOCUMENTS. "Contract Documents" means the Notice Inviting Bids, Instructions to Bidders, Supplementary Instructions to Bidders, Proposal, this Agreement, Standard Specifications, Special Provisions, General Provisions, Supplementary Conditions, Exhibits, Technical Specifications, List of Drawings, Drawings, Addenda, Notice to Proceed, Change Orders, Notice of Completion, and all other documents identified in this Agreement of which together form the contract between the City and the Contractor for the Work (the "Contract"). The Contract constitutes the complete agreement between the City and the Contractor and supersedes any previous agreements or understandings.

3. CONTRACT SUM.

A. Subject to the provisions of the Contract Documents, the City will pay to the Contractor, for performing the Work, $_____ (the "Contract Sum").

B. The Contract Sum includes the following Alternates accepted by the City:

C. The City reserves the right to accept Alternates, if any, within 30 days after the date of this Agreement.

D. Unit prices, if any, are as set forth in the Proposal.

E. The Contract Sum will be increased or decreased by an amount equal to the unit price multiplied by the actual number of units of each unit price item incorporated in the Work.

4. TIME FOR PERFORMANCE.

A. The Contractor will fully complete the Work within «Working_Days» calendar days, the "Contract Time."

B. The time for performance will commence when a notice to proceed is issued. The Contract Documents will supersede any conflicting provisions included on the notice to proceed issued pursuant to this Agreement.

C. The Contractor will not perform any work under this Agreement until:

1. The Contractor furnishes proof of insurance as required by the Contract Documents; and
2. The City gives the Contractor a written, signed, and numbered purchase order and notice to proceed. The Contract Documents will supersede any conflicting provisions included on the purchase order or notice to proceed issued pursuant to this Agreement.

D. Should the Contractor begin work on any phase in advance of receiving written authorization to proceed, any such services are at the Contractor's own risk.

E. By signing this Contract, the Contractor represents to the City that the Contract Time is reasonable for completion of the Work and that the Contractor will complete the Work within the Contract Time.

5. LIQUIDATED DAMAGES. The City and the Contractor agree that if the Work is not completed within the Contract Time, the City's damages would be extremely difficult or impracticable to determine and that the amount set forth herein is a reasonable estimate of and a reasonable sum for such damages. The City may deduct any liquidated damages due from the Contractor from any amounts otherwise due to the Contractor under the Contract Documents. This provision will not limit any right or remedy the City may have in the event of any other default by the Contractor other than failing to complete the Work within the Contract Time. This provision will not be applicable nor act as a limitation upon the City if the Contractor abandons the Work. Should that occur, the Contractor will be liable to the City for all losses and damages incurred by the City. Nothing contained in this Agreement is intended to, nor will it, limit additional provisions regarding liquidated damages that may be included in the Contract Documents.

1. If the Contractor fails to complete the Work within the Contract Time, the Contractor will pay to the City, as liquidated damages and not as a penalty, the sum of $750 for each day after the expiration of the Contract Time that the Work remains incomplete.
2. If the Contractor fails to keep traffic lanes open, the Contractor will pay to the City, as liquidated damages and not as a penalty, the sum of $62.5 per hour per lane.
3. If the Contractor disrupts the City traffic signal control system, the Contractor will pay to the City, as liquidated damages and not as a penalty, the sum of $750 per calendar day.
4. If the Contractor fails to replace temporary resurfacing within 30 calendar days, the Contractor will pay to the City, as liquidated damages and not as a penalty, the sum of $750 per calendar day.
5. If the Contractor fails to reestablish water service, the Contractor will pay to the City, as liquidated damages and not as a penalty, the sum of $750 per hour.

6. THIRD PARTY CLAIMS. In accordance with Public Contracts Code §9201, the City will promptly inform the Contractor regarding third-party claims against the Contractor, but in no event later than twenty (20) business days after the City

receives such claims. Such notification will be in writing and forwarded in accordance with the "Notice" section of the Contract Documents. As more specifically detailed in the Contract Documents, the Contractor agrees to indemnify and defend the City against any third-party claim.

7. **NOTICES.** All communications to either party by the other party will be deemed made when received by such party at its respective name and address as follows:

The City	The Contractor
City Engineer City of San Buenaventura P. O. Box 99 Ventura, CA 93002-0099	

Any such written communications by mail will be conclusively deemed to have been received by the addressee upon deposit thereof in the United States Mail, postage prepaid and properly addressed as noted above. In all other instances, notices will be deemed given at the time of actual delivery. Changes may be made in the names or addresses of persons to whom notices are to be given by giving notice in the manner prescribed in this paragraph.

8. **INTERPRETATION.** This Agreement was drafted in, and will be governed in accordance with the laws of the State of California, and exclusive venue for any action involving this agreement will be in Ventura County.

9. **AUTHORITY/MODIFICATION.** The Parties represent and warrant that all necessary action has been taken by the Parties to authorize the undersigned to execute this Agreement and to engage in the actions described herein. This Agreement may be modified by written agreement.

10. **TIME IS OF ESSENCE.** Time is of the essence for each and every provision of this Agreement.

11. **STATEMENT OF EXPERIENCE.** By executing this Agreement, the Contractor represents that it has demonstrated trustworthiness and possesses the quality, fitness and capacity to perform the Agreement in a manner satisfactory to the City. The Contractor represents that its financial resources, surety and insurance experience, service experience, completion ability, personnel, current workload, experience in dealing with private Contractors, and experience in dealing with public agencies all suggest that the Contractor is capable of performing the proposed contract and has a demonstrated capacity to deal fairly and effectively with and to satisfy a public agency.

IN WITNESS WHEREOF the parties hereto have executed this contract the day and year first hereinabove written.

CITY OF SAN BUENAVENTURA,
a Charter City and Municipal Corporation.

City Manager or Designee	Contractor
Authority:	By: _____
City Council Minute Order	Title
ATTEST:	By: _____
Michael B. MacDonald, CMC City Clerk	Title

APPROVED AS TO FORM:
JAVAN N. RAD, CITY ATTORNEY
PER SMBC, SECTION 4.600.050

INSURANCE AND BONDING REQUIREMENTS

Contractor shall procure and maintain insurance against claims for injuries to persons or damages to property which may arise from or in connection with the performance of the work hereunder by the Contractor, their agents, representatives, employees, or subcontractors.

Minimum Scope and Limit of Insurance

Coverage shall be at least as broad as:

1. **Commercial General Liability** (CGL): Insurance Services Office (ISO) Form CG 00 01 covering CGL on an "occurrence" basis, including products and completed operations, property damage, bodily injury, and personal & advertising injury with limits no less than **$5,000,000** per occurrence and **$10,000,000** in aggregate.
2. **Automobile Liability**: Insurance Services Office Form CA 0001 covering Code 1 (any auto), with limits no less than **$5,000,000** per accident for bodily injury and property damage. If Contractor is transporting hazardous materials, an **MCS-90** endorsement is required.
3. **Workers' Compensation** insurance as required by the State of California, with Statutory Limits, and Employers' Liability insurance with a limit of no less than **$1,000,000** per accident for bodily injury or disease. United States Longshore and Harbor Workers **(USL&H)** coverage will apply for work done in or around the pier, docks and marina or other navigable waters.
4. **Builder's Risk** (Course of Construction) insurance utilizing an "All Risk" (Special Perils) coverage form, with limits equal to the completed value of the project and no coinsurance penalty provisions. Alternatively, an Installation Floater will be accepted in lieu of a Builder's Risk policy for projects where no real property construction is taking place (e.g., paving projects).
5. **Surety Bonds** as described below.

If the contractor maintains broader coverage and/or higher limits than the minimums shown above, the City requires and shall be entitled to the broader coverage and/or the higher limits maintained by the contractor. Any available insurance proceeds in excess of the specified minimum limits of insurance and coverage shall be available to the City.

Self-Insured Retentions

Self-insured retentions must be declared to and approved by the City. The City may require the Contractor to purchase coverage with a lower retention or provide proof of ability to pay losses and related investigations, claim administration, and defense expenses within the retention. The CGL and any policies, including Excess liability policies, may not be subject to a self-insured retention (SIR) or deductible that exceeds $50,000 unless approved in writing by City. Any and all deductibles and SIRs shall be the sole responsibility of Contractor or subcontractor who procured such insurance and shall not apply to the Indemnified Additional Insured Parties. City may deduct from any amounts otherwise due Contractor to fund the SIR/deductible. Policies shall NOT

contain any self-insured retention (SIR) provision that limits the satisfaction of the SIR to the Named Insured. The policy must also provide that Defense costs, including the Allocated Loss Adjustment Expenses, will satisfy the SIR or deductible. City reserves the right to obtain a copy of any policies and endorsements for verification.

Other Insurance Provisions

The insurance policies are to contain, or be endorsed to contain, the following provisions:

1. **The City of San Buenaventura, its officers, officials, employees, and volunteers are to be covered as additional insureds** on the CGL policy with respect to liability arising out of work or operations performed by or on behalf of the Contractor including materials, parts, or equipment furnished in connection with such work or ongoing operations or completed operations and automobiles owned, leased, hired, or borrowed by or on behalf of the Contractor. General liability coverage can be provided in the form of an endorsement to the Contractor's insurance (at least as broad as ISO Form CG 20 10, CG 11 85 or **both** CG 20 10, CG 20 26, CG 20 33, or CG 20 38; **and** CG 20 37 forms if later revisions used).
2. For any claims related to this project, the **Contractor's insurance coverage shall be primary and non-contributory** insurance coverage at least as broad as ISO CG 20 01 04 13 as respects the City, its officers, officials, employees, and volunteers. Any insurance or self-insurance maintained by the City, its officers, officials, employees, or volunteers shall be excess of the Contractor's insurance and shall not contribute with it. This requirement shall also apply to any Excess or Umbrella liability policies.
3. Each insurance policy required by this clause shall provide that coverage shall not be canceled, except with prior notice to the City.

Builder's Risk (Course of Construction) Insurance

Contractor must submit evidence of Builder's Risk insurance in the form of Course of Construction coverage. Such coverage shall **name the City as a loss payee** as their interest may appear.

If the project does not involve new or major reconstruction, at the option of the City, an Installation Floater may be acceptable. For such projects, a Property Installation Floater shall be obtained that provides for the improvement, remodel, modification, alteration, conversion or adjustment to existing buildings, structures, processes, machinery, and equipment. The Property Installation Floater shall provide property damage coverage for any building, structure, machinery, or equipment damaged, impaired, broken, or destroyed during the performance of the Work, including during transit, installation, and testing at the City's site.

Claims Made Policies

If any coverage required is written on a claims-made coverage form:

1. The retroactive date must be shown, and this date must be before the execution date of the contract or the beginning of contract work.
2. Insurance must be maintained, and evidence of insurance must be provided for at least five (5) years after completion of contract work.
3. If coverage is cancelled or non-renewed, and not replaced with another claims-made policy form with a retroactive date prior to the contract effective, or start of work date, the Contractor must purchase extended reporting period coverage for a minimum of five (5) years after completion of contract work.
4. A copy of the claims reporting requirements must be submitted to the City for review.
5. If the services involve lead-based paint or asbestos identification/remediation, the Contractors Pollution Liability policy shall not contain lead-based paint or asbestos exclusions. If the services involve mold identification/remediation, the Contractors Pollution Liability policy shall not contain a mold exclusion, and the definition of Pollution shall include microbial matter, including mold.

Umbrella or Excess Policies

The Contractor may use Umbrella or Excess Policies to provide the liability limits as required in this agreement. This form of insurance will be acceptable provided that all of the Primary and Umbrella or Excess Policies shall provide all of the insurance coverages herein required, including, but not limited to, primary and non-contributory, additional insured, Self-Insured Retentions (SIRs), indemnity, and defense requirements. The Umbrella or Excess policies shall be provided on a true “following form” or broader coverage basis, with coverage at least as broad as provided on the underlying Commercial General Liability insurance. No insurance policies maintained by the Additional Insureds, whether primary or excess, and which also apply to a loss covered hereunder, shall be called upon to contribute to a loss until the Contractor’s primary and excess liability policies are exhausted.

Acceptability of Insurers

Insurance is to be placed with insurers authorized to conduct business in the state with a current A.M. Best rating of no less than A: VII, unless otherwise acceptable to the City.

Waiver of Subrogation

Contractor hereby agrees to waive rights of subrogation which any insurer of Contractor may acquire from Contractor by virtue of the payment of any loss. Contractor agrees to obtain any endorsement that may be necessary to affect this waiver of subrogation. **The Workers’ Compensation policy shall be endorsed with a waiver of subrogation** in favor of the City for all work performed by the Contractor, its employees, agents, and subcontractors.

Verification of Coverage

Contractor must furnish the City with original certificates and amendatory endorsements or copies of the applicable policy language. All certificates and

endorsements and copies of the Declarations & Endorsements pages are to be received and approved by the City before work commences. However, failure to obtain the required documents prior to the work beginning shall not waive the Contractor's obligation to provide them. The City reserves the right to require complete, certified copies of all required insurance policies, including endorsements required by these specifications, at any time. The City reserves the right to modify these requirements, including limits, based on the nature of the risk, prior experience, insurer, coverage, or other special circumstances.

Subcontractors

Contractor shall require and verify that all subcontractors maintain insurance meeting all requirements stated herein, and Contractor shall ensure that City is an additional insured on insurance required from subcontractors. For CGL coverage, subcontractors shall provide coverage with a form at least as broad as CG 20 38 04 13.

Duration of Coverage

CGL & Excess liability policies for any construction related work, including, but not limited to, maintenance, service, or repair work, shall continue coverage for a minimum of 5 years for Completed Operations liability coverage. Such Insurance must be maintained, and evidence of insurance must be provided ***for at least five (5) years after completion of the contract of work.***

Surety Bonds

Contractor shall provide the following Surety Bonds:

1. Bid Bond
2. Performance Bond
3. Payment Bond
    1. The Payment Bond and the Performance Bond shall be in a sum equal to the contract price. If the Performance Bond provides for a one-year warranty a separate Maintenance Bond is not necessary. If the warranty period specified in the contract is for longer than one year a Maintenance Bond equal to 10% of the contract price is required. Bonds shall be duly executed by a responsible corporate surety, authorized to issue such bonds in the State of California and secured through an authorized agent with an office in California.

FAITHFUL PERFORMANCE BOND

KNOW ALL PERSONS BY THESE PRESENTS:

THAT WHEREAS, the City of San Buenaventura, (hereinafter referred to as "City") has awarded to _____, (hereinafter referred to as the "Contractor") an agreement for _____, (hereinafter referred to as the "Project").

WHEREAS, the work to be performed by the Contractor is more particularly set forth in the Contract Documents for the Project dated _____, (hereinafter referred to as "Contract Documents"), the terms and conditions of which are expressly incorporated herein by reference; and

WHEREAS, the Contractor is required by said Contract Documents to perform the terms thereof and to furnish a bond for the faithful performance of said Contract Documents.

NOW, THEREFORE, we, _____, the undersigned Contractor and _____ as Surety, a corporation organized and duly authorized to transact business under the laws of the State of California, are held and firmly bound unto the City in the sum of _____ DOLLARS, ($_____), said sum being not less than one hundred percent (100%) of the total amount of the Contract, for which amount well and truly to be made, we bind ourselves, our heirs, executors and administrators, successors and assigns, jointly and severally, firmly by these presents.

THE CONDITION OF THIS OBLIGATION IS SUCH, that, if the Contractor, their executors, administrators, successors or assigns, shall in all things stand to and abide by, and well and truly keep and perform the covenants, conditions and agreements in the Contract Documents and any alteration thereof made as therein provided, on its part, to be kept and performed at the time and in the manner therein specified, and in all respects according to their intent and meaning; and shall faithfully fulfill all obligations including the one (1) year guarantee of all materials and workmanship; and shall indemnify and save harmless the City, its officials, officers, employees, and authorized volunteers, as stipulated in said Contract Documents, then this obligation shall become null and void; otherwise it shall be and remain in full force and effect.

As a part of the obligation secured hereby and in addition to the face amount specified therefore, there shall be included costs and reasonable expenses and fees including reasonable attorney's fees, incurred by City in enforcing such obligation.

As a condition precedent to the satisfactory completion of the Contract Documents, unless otherwise provided for in the Contract Documents, the above obligation shall hold good for a period of one (1) year after the acceptance of the work by City, during which time if Contractor shall fail to make full, complete, and satisfactory repair and replacements and totally protect the City from loss or damage resulting from or caused

by defective materials or faulty workmanship. The obligations of Surety hereunder shall continue so long as any obligation of Contractor remains. Nothing herein shall limit the City's rights or the Contractor or Surety's obligations under the Contract, law or equity, including, but not limited to, California Code of Civil Procedure Section 337.15.

Whenever Contractor shall be, and is declared by the City to be, in default under the Contract Documents, the Surety shall remedy the default pursuant to the Contract Documents, or shall promptly, at the City's option:

1. Take over and complete the Project in accordance with all terms and conditions in the Contract Documents; or

2. Obtain a bid or bids for completing the Project in accordance with all terms and conditions in the Contract Documents and upon determination by Surety of the lowest responsive and responsible bidder, arrange for a Contract between such bidder, the Surety and the City, and make available as work progresses sufficient funds to pay the cost of completion of the Project, less the balance of the contract price, including other costs and damages for which Surety may be liable. The term "balance of the contract price" as used in this paragraph shall mean the total amount payable to Contractor by the City under the Contract and any modification thereto, less any amount previously paid by the City to the Contractor and any other set offs pursuant to the Contract Documents.

3. Permit the City to complete the Project in any manner consistent with California law and make available as work progresses sufficient funds to pay the cost of completion of the Project, less the balance of the contract price, including other costs and damages for which Surety may be liable. The term "balance of the contract price" as used in this paragraph shall mean the total amount payable to Contractor by the City under the Contract and any modification thereto, less any amount previously paid by the City to the Contractor and any other set offs pursuant to the Contract Documents.

Surety expressly agrees that the City may reject any contractor or subcontractor which may be proposed by Surety in fulfillment of its obligations in the event of default by the Contractor.

Surety may arrange for the original Contractor, with the consent of the City, to perform and complete the Project.

The Surety, for value received, hereby stipulates and agrees that no change, extension of time, alteration or addition to the terms of the Contract Documents or to the Project to be performed thereunder shall in any way affect its obligations on this bond, and it does hereby waive notice of any such change, extension of time, alteration or addition to the terms of the Contract Documents or to the Project.

[REMAINDER OF PAGE LEFT INTENTIONALLY BLANK]

IN WITNESS WHEREOF, we have hereunto set our hands and seals this _____ day of _____, 20___.

(Corporate Seal)

_____
Contractor/ Principal

By_____

Title_____

(Corporate Seal)

_____
Surety

By _____
Attorney-in-Fact

(Attach Attorney-in-Fact Certificate)

Title_____

The rate of premium on this bond is _____ per thousand. The total amount of premium charges is $_____.
(The above must be filled in by corporate attorney.)

THIS IS A REQUIRED FORM

Any claims under this bond may be addressed to:

(Name and Address of Surety) _____
_____
_____

(Name and Address of Agent or Representative for service of _____
process in California, if different from above) _____

(Telephone number of Surety and Agent or Representative for service of process in California) _____

Notary Acknowledgment

A notary public or other officer completing this certificate verifies only the identity of the individual who signed the document to which this certificate is attached, and not the truthfulness, accuracy, or validity of that document.

STATE OF CALIFORNIA
COUNTY OF _____

On _____, 20___, before me, _____, Notary Public, personally

appeared _____, who proved to me on the basis of satisfactory

evidence to be the person(s) whose name(s) is/are subscribed to the within instrument and acknowledged to me that they executed the same in their authorized capacity(ies), and that by their signature(s) on the instrument the person(s), or the entity upon behalf of which the person(s) acted, executed the instrument.

I certify under PENALTY OF PERJURY under the laws of the State of California that the foregoing paragraph is true and correct.

WITNESS my hand and official seal.

_____

Signature of Notary Public

OPTIONAL

Though the information below is not required by law, it may prove valuable to persons relying on the document and could prevent fraudulent removal and reattachment of this form to another document.

CAPACITY CLAIMED BY SIGNER

¨ Individual
¨ Corporate Officer

_____
Title(s)

¨ Partner(s) ¨ Limited
¨ General

¨ Attorney-In-Fact
¨ Trustee(s)
¨ Guardian/Conservator
¨ Other:

Signer is representing:
Name Of Person(s) Or Entity(ies)

_____

_____

DESCRIPTION OF ATTACHED DOCUMENT

_____
Title or Type of Document

_____
Number of Pages

_____
Date of Document

_____
Signer(s) Other Than Named Above

NOTE: This acknowledgment is to be completed for Contractor/Principal.

Notary Acknowledgment

A notary public or other officer completing this certificate verifies only the identity of the individual who signed the document to which this certificate is attached, and not the truthfulness, accuracy, or validity of that document.

STATE OF CALIFORNIA
COUNTY OF _____

On _____, 20___, before me, _____, Notary Public, personally

appeared _____, who proved to me on the basis of satisfactory

evidence to be the person(s) whose name(s) is/are subscribed to the within instrument and acknowledged to me that they executed the same in their authorized capacity(ies), and that by their signature(s) on the instrument the person(s), or the entity upon behalf of which the person(s) acted, executed the instrument.

I certify under PENALTY OF PERJURY under the laws of the State of California that the foregoing paragraph is true and correct.

WITNESS my hand and official seal.

_____

Signature of Notary Public

OPTIONAL

Though the information below is not required by law, it may prove valuable to persons relying on the document and could prevent fraudulent removal and reattachment of this form to another document.

CAPACITY CLAIMED BY SIGNER

¨ Individual
¨ Corporate Officer

_____
Title(s)

¨ Partner(s) ¨ Limited
¨ General

¨ Attorney-In-Fact
¨ Trustee(s)
¨ Guardian/Conservator
¨ Other:

Signer is representing:
Name Of Person(s) Or Entity(ies)

_____

_____

DESCRIPTION OF ATTACHED DOCUMENT

_____
Title or Type of Document

_____
Number of Pages

_____
Date of Document

_____
Signer(s) Other Than Named Above

NOTE: This acknowledgment is to be completed for the Attorney-in-Fact. The Power-of Attorney to local representatives of the bonding company must also be attached.

END OF PERFORMANCE BOND

LABOR AND MATERIAL PAYMENT BOND

KNOW ALL MEN BY THESE PRESENTS That WHEREAS, the City of San Buenaventura (hereinafter designated as the "City"), by action taken or a resolution passed _____ , 20____, has awarded to _____ hereinafter designated as the "Principal," a contract for the work described as follows: _____ (the "Project"); and

WHEREAS, said Principal is required to furnish a bond in connection with said contract; providing that if said Principal or any of its Subcontractors shall fail to pay for any materials, provisions, provender, equipment, or other supplies used in, upon, for or about the performance of the work contracted to be done, or for any work or labor done thereon of any kind, or for amounts due under the Unemployment Insurance Code or for any amounts required to be deducted, withheld, and paid over to the Employment Development Department from the wages of employees of said Principal and its Subcontractors with respect to such work or labor the Surety on this bond will pay for the same to the extent hereinafter set forth.

NOW THEREFORE, we, the Principal and _____ as Surety, are held and firmly bound unto the City in the penal sum of _____ Dollars ($_____) lawful money of the United States of America, for the payment of which sum well and truly to be made, we bind ourselves, our heirs, executors, administrators, successors and assigns, jointly and severally, firmly by these presents.

THE CONDITION OF THIS OBLIGATION IS SUCH that if said Principal, their or its subcontractors, heirs, executors, administrators, successors or assigns, shall fail to pay any of the persons named in Civil Code Section 9100, fail to pay for any materials, provisions or other supplies, used in, upon, for or about the performance of the work contracted to be done, or for any work or labor thereon of any kind, or amounts due under the Unemployment Insurance Code with respect to work or labor performed under the contract, or for any amounts required to be deducted, withheld, and paid over to the Employment Development Department or Franchise Tax Board from the wages of employees of the contractor and their subcontractors pursuant to Revenue and Taxation Code Section 18663, with respect to such work and labor the Surety or Sureties will pay for the same, in an amount not exceeding the sum herein above specified, and also, in case suit is brought upon this bond, all litigation expenses incurred by the City in such suit, including reasonable attorneys' fees, court costs, expert witness fees and investigation expenses.

This bond shall inure to the benefit of any of the persons named in Civil Code Section 9100 so as to give a right of action to such persons or their assigns in any suit brought upon this bond.

It is further stipulated and agreed that the Surety on this bond shall not be exonerated or released from the obligation of this bond by any change, extension of time for performance, addition, alteration or modification in, to, or of any contract, plans, specifications, or agreement pertaining or relating to any scheme or work of improvement herein above described, or pertaining or relating to the furnishing of labor, materials, or

equipment therefore, nor by any change or modification of any terms of payment or extension of the time for any payment pertaining or relating to any scheme or work of improvement herein above described, nor by any rescission or attempted rescission or attempted rescission of the contract, agreement or bond, nor by any conditions precedent or subsequent in the bond attempting to limit the right of recovery of claimants otherwise entitled to recover under any such contract or agreement or under the bond, nor by any fraud practiced by any person other than the claimant seeking to recover on the bond and that this bond be construed most strongly against the Surety and in favor of all persons for whose benefit such bond is given, and under no circumstances shall Surety be released from liability to those for whose benefit such bond has been given, by reason of any breach of contract between the owner or City and original contractor or on the part of any obligee named in such bond, but the sole conditions of recovery shall be that claimant is a person described in Civil Code Section 9100, and has not been paid the full amount of their claim and that Surety does hereby waive notice of any such change, extension of time, addition, alteration or modification herein mentioned, including but not limited to the provisions of sections 2819 and 2845 of the California Civil Code.

IN WITNESS WHEREOF, we have hereunto set our hands and seals this _____ day of _____, 20__.

(Corporate Seal)

_____
Contractor/ Principal

By_____

Title_____

(Corporate Seal)

_____
Surety

By _____
Attorney-in-Fact

(Attach Attorney-in-Fact Certificate)

Title_____

Notary Acknowledgment

A notary public or other officer completing this certificate verifies only the identity of the individual who signed the document to which this certificate is attached, and not the truthfulness, accuracy, or validity of that document.

STATE OF CALIFORNIA
COUNTY OF _____

On _____, 20___, before me, _____, Notary Public, personally

appeared _____, who proved to me on the basis of satisfactory

evidence to be the person(s) whose name(s) is/are subscribed to the within instrument and acknowledged to me that they executed the same in their authorized capacity(ies), and that by their signature(s) on the instrument the person(s), or the entity upon behalf of which the person(s) acted, executed the instrument.

I certify under PENALTY OF PERJURY under the laws of the State of California that the foregoing paragraph is true and correct.

WITNESS my hand and official seal.

_____

Signature of Notary Public

OPTIONAL

Though the information below is not required by law, it may prove valuable to persons relying on the document and could prevent fraudulent removal and reattachment of this form to another document.

CAPACITY CLAIMED BY SIGNER

¨ Individual
¨ Corporate Officer

_____
Title(s)

¨ Partner(s) ¨ Limited
¨ General

¨ Attorney-In-Fact
¨ Trustee(s)
¨ Guardian/Conservator
¨ Other:

Signer is representing:
Name Of Person(s) Or Entity(ies)

_____

_____

DESCRIPTION OF ATTACHED DOCUMENT

_____
Title or Type of Document

_____
Number of Pages

_____
Date of Document

_____
Signer(s) Other Than Named Above

NOTE: This acknowledgment is to be completed for Contractor/Principal.

Notary Acknowledgment

A notary public or other officer completing this certificate verifies only the identity of the individual who signed the document to which this certificate is attached, and not the truthfulness, accuracy, or validity of that document.

STATE OF CALIFORNIA
COUNTY OF _____

On _____, 20___, before me, _____, Notary Public, personally

appeared _____, who proved to me on the basis of satisfactory

evidence to be the person(s) whose name(s) is/are subscribed to the within instrument and acknowledged to me that they executed the same in their authorized capacity(ies), and that by their signature(s) on the instrument the person(s), or the entity upon behalf of which the person(s) acted, executed the instrument.

I certify under PENALTY OF PERJURY under the laws of the State of California that the foregoing paragraph is true and correct.

WITNESS my hand and official seal.

_____

Signature of Notary Public

OPTIONAL

Though the information below is not required by law, it may prove valuable to persons relying on the document and could prevent fraudulent removal and reattachment of this form to another document.

CAPACITY CLAIMED BY SIGNER

☐ Individual
☐ Corporate Officer

_____
Title(s)

☐ Partner(s) ☐ Limited ☐ General

☐ Attorney-In-Fact
☐ Trustee(s)
☐ Guardian/Conservator
☐ Other:

Signer is representing:
Name Of Person(s) Or Entity(ies)

_____

_____

DESCRIPTION OF ATTACHED DOCUMENT

_____
Title or Type of Document

_____
Number of Pages

_____
Date of Document

_____
Signer(s) Other Than Named Above

NOTE: This acknowledgment is to be completed for the Attorney-in-Fact. The Power-of-Attorney to local representatives of the bonding company must also be attached.

END OF PAYMENT BOND

CITY OF SAN BUENAVENTURA
PUBLIC WORKS DEPARTMENT

STANDARD SPECIFICATIONS

Intentionally left blank

0 USE OF STANDARD SPECIFICATIONS FOR PUBLIC WORKS

0-1 GENERAL

Except as modified herein, the provisions of the 2018 edition of the "Standard Specifications for Public Works Construction," (SSPWC) and its supplements prepared and promulgated by the Southern California Chapters of the American Public Works Association and the Associated General Contractors of America, will constitute the Standard Specifications for this project. The following pages of modifications and additions to the Standard Specifications will be referred to as the Special Provisions.

0-2 NUMBERING OF SECTIONS

The numbering of Subsections 1 through 800 in these Specifications is compatible with the numbering in the SSPWC.

0-3 MODIFICATIONS

The Subsections numbered 1 through 800 which follow either replace, modify, or add to sections of like number in the SSPWC. Subsections numbered 900 and above may modify Subsections in the SSPWC. To the extent of any conflict with the SSPWC, these provisions will take precedence.

1 GENERAL

1-2 TERMS AND DEFINITIONS

The following subsection is added to Subsection 1-2 of the SSPWC.

1-2.1 Additional Definitions

Acceptance – The recordation date of the Notice of Completion as recorded by the City of San Buenaventura with the County Recorder's Office.

Architect, Design Engineers, Soils Engineer, Structural Engineers - Advisors employed by the City.

Bidder - Any individual, firm, partnership, corporation, or combination thereof, submitting a proposal for the work contemplated, acting directly or through a duly authorized representative.

Calendar Day – Any day, including weekends and holidays, beginning at 12:00 midnight and ending 12:00 midnight 24-hours later. There are seven calendar days per week and 365 calendar days per year.

City Council - The body constituting the awarding authority of the City.

Compensable Delay – A delay entitling the Contractor to an adjustment of the Contract Sum and an adjustment of the Contract Time in accordance with this Agreement.

Competent Person – Contractor's site representative who is capable of identifying existing and predictable hazards in the surroundings or working conditions which are unsanitary, hazardous, or dangerous to employees, and who has authorization to take prompt corrective measures to eliminate them. By way of training and/or experience, a competent person is knowledgeable of applicable standards, is capable of identifying workplace hazards relating to the specific operation, and has the authority to correct them.

Due Notice - A written notification, given in due time, of a proposed action where such notification is required by the contract to be given a specified interval of time (usually 48 hours or two working days) before the commencement of the contemplated action. Notification may be from Engineer to Contractor or from Contractor to Engineer.

Engineer - The City Engineer, or designee, as defined in the SSPWC. Unless otherwise provided, all correspondence and decisions made relative to the contract will be by the City Engineer or their designated representative.

Furnish – To purchase. If City-Furnished, the City will purchase and make available for Contractor to install. All equipment and materials are Contractor furnished unless explicitly noted otherwise. See also "Provide".

Install – To put into place. The Contractor is responsible for installing all work items unless explicitly noted otherwise as to be installed by others.

Prompt - The briefest interval of time required for a considered reply, including time required for approval of a governing body.

Provide – same as "Furnish" except can be used to define services as well as equipment and materials. The Contractor provides all services specified unless explicitly noted otherwise as being provided by others. See also "Furnish".

Public Works Director – The City's Public Works Director, or designee.

State Standard Specifications - State of California Standard Specifications, dated 2018, Business and Transportation Agency, Department of Transportation.

Superintendent - The Contractor's representative at the site that has authority to act on behalf of the Contractor. All communications given to the superintendent shall be as binding as if given to the Contractor.

1-3 ABBREVIATIONS

1-3.2 Common Usage

The following abbreviations are added to Subsection 1-3.2 of the SSPWC:

SSPWC	Standard Specification for Public Works Construction, 2018 edition, prepared by Southern California Chapters of AGC and APWA
CITY	City of San Buenaventura
SSP	State of California Standard Plans, 2018 edition
SSS	State of California Standard Specifications, 2018 edition

1-3.3 Institutions

The following subsection is added to Subsection 1-3.3 of the SSPWC.

AAN	American Association of Nurserymen
AGC	Associated General Contractors of America
APWA	American Public Works Association
ASME	American Society of Mechanical Engineers
ASA	American Standard Association

1-6 BIDDING AND SUBMISSION OF THE BID

Subsections 1-6.2 Subcontractor Listing of Subcontractors, of SSPWC has been deleted in its entirety and replaced with the following subsection.

1-6.2 Subcontractor Listing

Except as provided in Section 4100 et. seq. of the Public Contract Code, each bidder will file with its bid the name and location of the place of business of each subcontractor who will perform work or labor or render service to the prime Contractor in or about the construction of the work or improvement, or a subcontractor licensed by the State of California who, under subcontract to the prime contractor, specifically fabricates and installs a portion of the work or improvement according to detailed drawings contained in the plans and specifications, in an amount in

excess of one-half of one percent of the prime contractor's total bid. Only one subcontractor will be listed for each portion of the work, which portion will be defined in the bid. In each instance, the nature and extent of the work to be sublet will be described. The failure of the Contractor to specify a subcontractor, or the listing of more than one subcontractor for the same portion of the work, constitutes an agreement by the Contractor that it is fully qualified to perform that portion itself and that it will perform that portion itself.

The Contractor shall have the written consent of the City Council to substitute a subcontractor other than that designated in the original bid, to permit any subcontract to be assigned or transferred, or to allow a subcontract to be performed by other than the original subcontractor.

Subcontracting of work for which no subcontractor was designated in the original bid, and which is more than one-half of one percent of the work, will be allowed only in cases of public emergency or necessity, and then only after a finding reduced to writing as a public record of the City Council setting forth the facts constituting the emergency or necessity.

Violation of any of the above provisions will be considered a breach of the contract, and the City may terminate the Contractor's control over the Work, cancel the contract, or assess the Contractor a penalty of not more than ten percent of the subcontract involved.

1-7 AWARD AND EXECUTION OF THE CONTRACT

The following subsections 1-7.3 and 1-7.4 are added to the SSPWC.

1-7.2 Contract Bonds

The following paragraph is added to Subsection 1-7.2 of the SSPWC. The performance bond shall be paid up and in effect for one year after the acceptance of the job by the City in accordance with the guarantee required by Subsection 6-8.1.

1-7.3 Access to the Project Site

Not later than the date designated in the current Construction Schedule submitted by the Contractor, the City will provide access to the real property and facilities upon which the Work is to be performed, including access to real property and facilities designated in the Contract Documents for the Contractor's use.

1-7.4 Ownership and use of the Contract Documents

The Contract Documents and all copies furnished to or provided by the Contractor are the City's property and may not be used on other work.

2 SCOPE OF THE WORK

2-2 PERMITS

The following is added to Subsection 2-2 of SSPWC:

The Engineer has successfully obtained the NPDES permit, Well Permit, and Air Pollution Control Permit. However, the Contractor is responsible for securing all other permits, such as tree removal and encroachment permits. The Contractor shall follow the Storm Water Pollution Prevention Plan (SWPPP) to manage on-site groundwater discharge, which is approximately 1,600 cubic yards.

The Contractor will submit to the Engineer a map of their proposed haul route with an application for a City permit for overweight and oversized vehicles all in compliance with Section 7251 through 7257 of the City of San Buenaventura Ordinance Code. Allow 2 working days for review. The Contractor will not proceed exporting or importing material before obtaining an overweight and oversized vehicle permit. Any delay in acquiring an overweight and oversized vehicle permit will be at the Contractor's expense and no additional working days will be granted.

All bonding fees, (overweight and oversized vehicle permit fees) inspection permit fees or other fees charged or required for such permits shall be paid by the Contractor. These costs will be included in the bid item provided. If no bid item is included, costs will be included in the various items of work, and no additional payment will be allowed.

2-3 RIGHT-OF-WAY

The following subsection is added to Subsection 2-3 of the SSPWC.

2-3.1 Additional Work Areas and Facilities

When the Contractor arranges for additional temporary work areas and facilities, the Contractor will provide the City with proof that the additional work areas and/or facilities have been left in a condition satisfactory to the owner(s) of said work areas and/or facilities before acceptance of the work.

2-9 CHANGED CONDITIONS

Subsection 2-9, Changed Conditions, is deleted in its entirety and replaced with the following subsection:

If the Contractor encounters concealed or unknown conditions that differ materially from those anticipated or expected ("changed conditions"), the Contractor will immediately notify the Engineer in writing of such changed conditions (upon discovery and before disturbing such changed conditions), as provided in Subsection 6-10, so that the Engineer can determine if such conditions require design details that differ from those design details shown in the Contract Documents. Notwithstanding the thirty (30) day time period set forth in Subsection 6-10.3, the Contractor will be liable to the City for any extra costs incurred as a result of the Contractor's failure to promptly give such notice.

Changed conditions will include, without limitation, the following:

1. Subsurface or latent physical conditions differing materially from those represented in the Contract Documents;
2. Unknown physical conditions of an unusual nature differing materially from those ordinarily encountered and generally recognized as inherent in work of the character being performed; and
3. Material differing from the represented in the Contract which the Contractor believes may be hazardous waste as defined in California Health & Safety Code § 25117 that is required to be removed to a Class I, II, or III disposal site in accordance with applicable law.

The Engineer will promptly investigate conditions that appear to be changed conditions. The Engineer's decision, and any dispute regarding that decision, will be made in accordance with Section 6-10 except that the Engineer will render a decision promptly.

Any information provided pursuant to INFORMATION AVAILABLE TO BIDDERS is subject to the following provisions:

1. The information is made available for the Bidders' convenience and is not a part of the Contract.

2. The City has not determined the accuracy or completeness of such information and all such information is made available to Bidders without any representation or warranty by the City whatsoever as to its accuracy, completeness, or relevancy.

3. Bidders will independently evaluate such information for their use and will be solely responsible for use or interpretation of such

information. Any such use or interpretation will not be the basis of any claim against the City.

2-10 DISPUTED WORK

Subsection 2-10 is deleted in its entirety and replaced by the following subsection.

If the Contractor and the City do not reach agreement on disputed work, the City may direct the Contractor to proceed with the work. Any payment for the disputed work will be determined pursuant to the claims procedures established herein. Although not to be construed as proceeding under extra work provisions, the Contractor will keep and furnish records of disputed work as required by the Contract Documents.

3 CONTROL OF THE WORK

3-2 SELF PERFORMANCE

Add the following to Section 3.2 Self Performance:

The Contractor will submit experience statements for each subcontractor who will perform contract work that amounts to more than ten percent (10%) of the Work.

Reference is made to the Notice Inviting Bids. Designated specialty items, if any, are listed in the Notice Inviting Bids. The percentage requirement for performance of work with bidder's own forces shall be 15% less any designated specialty items in the Notice Inviting Bids. A lower or higher percentage may apply as indicated in the Notice Inviting Bids. The cost of materials/equipment, labor and incidentals shall be included in the calculation for determining the value of work for subcontracted items and will not be considered separately for the purpose of demonstrating an increased share of work performed by the General Contractor. The General Contractor cannot take credit for the purchase of material for work that is performed by a subcontractor for purposes of achieving the required percentage of work.

3-3 SUBCONTRACTORS

Sections 3-3 Subcontractors, of SSPWC has been deleted in its entirety and replaced with the following subsection.

All persons engaged in the work, including subcontractors and their employees will be considered as employees of the Contractor. The Contractor will be solely responsible for and have control over construction means, methods, techniques, sequences, procedures, and the

coordination of all portions of the Work. The City will deal directly with, and make all payments to the prime Contractor.

When subcontracted work is not being prosecuted in a satisfactory manner, the Contractor will be notified to take corrective action. The Engineer may report the facts to the City Council. If the City Council so orders, and on receipt by the Contractor of written instructions from the Engineer, the subcontractor will be removed immediately from the Work. That subcontractor will not again be employed on the Work.

3-7 CONTRACT DOCUMENTS

Subsection 3-7.1 of the SSPWC is replaced by the following subsection.

3-7.1 General

The Contractor will maintain the following at the Work site:

1. One as-built copy of the Plans and Specifications, in good order and marked to record current changes and selections made during construction.

2. The current accepted Construction Schedule.

3. Shop Drawings, Product Data, and Samples.

4. All other required submittals.

The Plans, Specifications, and other Contract Documents will govern the Work. The Contract Documents are intended to be complementary and cooperative and to describe and provide for a complete project. Anything in the Specifications and not on the Plans, or on the Plans and not in the Specifications, will be as though shown or mentioned in both.

Payment for any items on the plans for which there is no specific bid item will be included in the various items of work or in any item to which it is appurtenant.

If the Contractor performs any work which it knows or should know involves an error, inconsistency, or omission without notifying and obtaining written consent from the Engineer, the Contractor will be responsible for the resulting losses, including, without limitation, the costs of correcting defective work.

3-7.2 Precedence of Contract Documents

The following paragraph is added to subsection 3-7.2 of the SSPWC:

As the figured dimensions shown on the plans and in the specifications of the Contract may not in every case agree with scaled dimensions, the figured dimensions will be followed in preference to the scaled dimensions, and plans to a large scale will be followed in preference to the plans to a small scale. Should it appear that the work to be done, or any of the matters relative thereto, are not sufficiently detailed or explained in the Contract, the Contractor will apply to the Engineer for such further explanations as may be necessary, and will conform thereto as part of the Contract so far as may be consistent with the terms thereof. Any items shown on drawings and not mentioned in the specifications will be of like effect as if shown or mentioned in both.

3-7.3 Accuracy of Plans and Specifications

The following subsection is added to Subsection 3-7 of the SSPWC.

Although it is believed that much of the information pertaining to conditions that may affect the cost of the Work will be shown on the Plans or indicated in the Specifications, the City does not warrant the completeness or accuracy of such information.

The Contractor will carefully study and compare each of the Contract Documents with the others and with information furnished by the City and will promptly report in writing to the Engineer any errors, inconsistencies, or omissions in the Contract Documents or inconsistencies with applicable law observed by the Contractor.

The Contractor will take field measurements, verify field conditions, and carefully compare with the Contract Documents such field measurements, conditions, and other information known to the Contractor before commencing the Work. Errors, inconsistencies, or omissions discovered at any time will be promptly reported in writing to the Engineer.

3-8.3 Shop Drawings

Subsection 3-8.3, Shop Drawings, of the SSPWC is deleted in its entirety and replaced by the following subsection:

The Contractor shall review, mark with approval and submit for review by the Engineer all shop drawings required by the Contract Documents. Six (6) sets of shop drawings shall be submitted to the Engineer and be accompanied by a letter of transmittal listing the drawings submitted. Drawings shall show the name of the projects, the name of the Contractor, and, if any, the names of suppliers, manufacturers, and subcontractors.

Shop Drawings shall be submitted with promptness and in orderly sequence so as to cause no delay in prosecution of the work.

Shop drawings shall be complete in all respects. If the shop drawings show any deviations from the requirements of the plans and specifications because of standard shop practices or other reasons, the deviations and the reasons therefor shall be set forth in the letter of transmittal.

By submitting shop drawings, the Contractor represents that material, equipment, and other work shown thereon conforms to the plans and specifications, except for any deviations set forth in the letter of transmittal. Drawings required for conventional stock pumps, motors and all other manufactured equipment may be brochures or catalog sheets but must show all necessary dimensions required for proper installation, operation and maintenance of the equipment.

The Engineer will, within three weeks of submittal receipt, return two of the copies of the drawings to the Contractor with any comments noted thereon. If so noted by the Engineer, the Contractor shall correct the drawings and resubmit them in the same manner as specified for the original resubmittal. The Contractor in the letter of transmittal accompanying resubmitted shop drawings shall direct specific attention to revisions other than the corrections requested by the Engineer on previous submittals.

The review by the Engineer is only of general conformance with the design concept of the project, and general compliance with the plans and specifications and shall not be construed as relieving the Contractor of the full responsibility for: providing materials, equipment, and work required by the contract; the proper fitting and construction of the work; the accuracy and coprocesses and techniques of construction; and performing the work in a safe manner.

No portion of the work requiring a shop drawing submittal shall commence until the submittal has been reviewed by the Engineer and returned to the Contractor with a notation indicating that resubmittal is not required. Any commitment made by the Contractor to purchase unapproved items shall be the Contractor's sole responsibility.

If the Contractor believes that any shop drawing or communication relative thereto calls for changes in the work for which the contract amount or time for completion should be changed, the Contractor shall not proceed with the changes in the work so called for and shall promptly notify the Engineer in writing of the estimated changes in the contract amount and time for completion believed to be appropriate. No payment for changes in the work will be made and no change in the time for completion by

reason of changes in the work will be made, unless the changes are covered by a written change order approved by the Engineer in advance of the Contractor's proceeding with the changed work.

3-10 SURVEYING

Subsection 3-10.1, General, is deleted in its entirety and replaced by the following subsection:

3-10.1 General

3-10.1.1 Construction Surveying

The Contractor will provide for all construction surveying required to layout, monitor and complete the work. The surveying will be performed by a Land Surveyor or Civil Engineer authorized to practice land surveying by the State of California.

The Project Benchmark is shown on the plans. The Contractor will establish all necessary control lines based on the plans and record information on file with the County of Ventura Surveyor and the Engineer.

It is the responsibility of the Contractor to protect the survey control as shown on the plans. If the survey control is destroyed or disturbed during construction, the Contractor will provide for resetting them and file appropriate documents with the County of Ventura at the direction of the Engineer.

Computations, survey notes, and other data used to accomplish the work will be neat, legible and accurate. Copies of all computations, survey notes, and other data will be furnished to the Engineer before beginning work that requires their use.

3-10.1.2 Measurement and Payment

Construction Survey - Payment will be considered included in the other items of the bid and no additional payment will be made therefore.

3-12 WORK SITE MAINTENANCE

3-12.4.2 Storage in Public Streets

The first paragraph of subsection 3-12.4.2 is deleted in its entirety and replaced by the following:

Construction materials and equipment shall not be stored overnight within the City right-of-way unless approved by the Engineer.

3-12.6 Water Pollution Control

3-12.6.1 General

The following is added to subsection 3-12.6.1 of the SSPWC.

This section covers the diversion and control of all water entering into the construction area or otherwise affecting construction activities.

All permanent construction will be performed in a site free from water unless otherwise provided for in the Special Provisions. The Contractor will construct, maintain and operate all necessary cofferdams, pumps, channels, flumes, drains and/or other temporary diversion and protective works required for diversion and control of all water, whatever its source, including groundwater encountered during trench excavation during construction.

Inundation of partially completed work due to lack of control during non-working periods will not be permitted and may be cause for requiring removal of work already completed with replacement at the Contractor's expense.

It will be understood and agreed that the Contractor will hold the agency and the engineer harmless for legal action taken by any third party with respect to construction and operations of the diversion and protective work.

All work installed by the Contractor in connection with the watering, control and diversion of water, but not specified to become a permanent part of the project, will be removed and the site restored, insofar as practical, to its original condition before completion of construction or when directed by the Engineer.

3-12.7 Cleanup and Dust Control / Use of City Water

The following subsections are added to subsection 3-12, Work Site Maintenance, of the SSPWC.

3-12.7.1 General

The Contractor is required to comply with the latest edition at the time of bid opening of the Ventura County Air Pollution Control District Rule 55,

Fugitive Dust. The specific requirements under Rule 55 are available at www.vcapcd.org.

On any construction project requiring trenching within public streets and for which total trenching is in excess of 500 feet, the Contractor will be required to sweep the worksite utilizing a pick-up type street sweeper a minimum of once daily.

3-12.7.2 Watering/Temporary Water Meter

Water for the laying of dust caused by Contractor's operations will be applied as necessary or as directed by the Engineer. Water shall not be used on streets to clean or to remove construction debris. A street sweeper shall be used to clean the streets (see Section 302-2.3.6).

Water for the above or other construction purposes may be obtained through the use of a temporary service by applying for a temporary hydrant meter. An application form for setting the meter can be received by calling 805-652-4581. Once a Temporary Meter Agreement is submitted by the Contractor with the requested information, along with the required deposit and fees, a copy of the Contractor's business license with the City of Ventura, and a copy of a grading permit, encroachment permit or Agreement for Construction of Public Works, the temporary meter will be installed on a hydrant at the location specified or otherwise approved by the City within 48 business hours. As of July 1, 2018, the total amount required prior to installation by Ventura Water is $557 ($300 Deposit, $257 setting fee). There is also a rental fee of $2.00 per day per temporary meter, and the cost of the water is $4.17 per HCF (100 cubic feet). Costs are subject to change and Contractors will be required to pay the latest adopted charges. Bidders are encouraged to verify costs prior to submitting a bid. All costs to be paid by the Contractor to Ventura Water shall be considered included in the Contractor's bid and no separate payment shall be made thereof. The Contractor can request that the meter be relocated by Ventura Water after its original installation for an additional fee of $86. The Contractor is not permitted to relocate the meter without express permission from Ventura Water and the relocation fee will still apply. The meter will be read monthly and the applicant billed for the amount of water used. The deposit will be refunded upon payment of all bills, removal of the hydrant meter and return of the meter in good condition upon completion of its use by the Contractor.

3-13 COMPLETION, ACCEPTANCE, AND WARRANTY

The following subsection is added to Subsection 3-13 of the SSPWC.

3-13.4 General Guaranty

The Contractor will remedy any defects in the work and pay for any damage to other work resulting therefrom, which will appear within a period of one year from the date of final acceptance of the work unless a longer period is specified. The City will give notice of observed defects with reasonable promptness.

4 CONTROL OF MATERIALS

4-3 INSPECTION

Subsection 4-3, Inspection Requirements, is deleted in its entirety and replaced by the following subsections.

4-3.1 General

Unless otherwise specified, inspection at the source of production for such materials and fabricated items as bituminous paving mixtures, structural concrete, fabricated metal products, cast metal products, welding, reinforced and unreinforced concrete pipe, application of protective coatings, and similar shop and plant operations is not required. A certificate of compliance, signed by an authorized officer of the producer, certifying compliance with the contract documents will be submitted for all of the following materials: steel pipe, sizes less than 18 inches; vitrified clay pipe; asbestos cement pipe; cast iron pipe; reinforced concrete pipe; non-reinforced concrete pipe; and PVC sewer and water pipe; subject to sampling and testing by City.

Standard items of equipment, such as electric motors, conveyors, plumbing fittings and fixtures, lumber, plywood, and so on, are subject to inspection at the job site.

All other equipment items will be inspected and tested in accordance with the contract documents.

The City does not provide full time inspection. The Contractor will provide 24-hour minimum notice for each inspection required by the work unless other arrangements have been agreed upon, in writing, with the City Engineer. Any inspection required outside of normal working hours and days, including holidays, will be at the Contractor's cost at rates established by the City.

4-3.3 Inspection of Materials Not Locally Produced

Contractor purchased materials, fabricated items, and equipment, produced at sources located more than 50 miles outside the corporate

limits of City, and which are specified to be inspected in the contract documents, will be inspected by inspectors or testing laboratories arranged for and paid for by City unless otherwise specified. If any item inspected fails to meet the specified criteria, Contractor will pay all costs for reinspection, and such costs may be deducted from payments due to Contractor.

4-6 TRADE NAMES

The first paragraph of Subsection 4-6 of the SSPWC is deleted and is replaced with the following paragraphs:

The Contractor may supply any material, product, thing and/or service specified or offer an equivalent, unless the trade name or model number of the item is followed by the words “no substitution”, “no substitute”, “no equal”, or similar language.

Pursuant to Public Contract Code Section 3400(b), the City has made the following finding as it relates to the need for the use of specific materials, products, things and/or services that must be utilized for the Project: In order to match other products in use, either completed or in the course of completion at other City Facilities or City Public Improvements, all specific materials, products, things and/or services that are listed by brand name and/or model number in the specifications and proceeded with the words no substitution”, no substitute”, no equal”, or similar language are required and may not be substituted with an “equal” item of different brand name and/or model number.

5 LEGAL RELATIONS AND RESPONSIBILITIES

5-3 LABOR

5-3.2 Prevailing Wages

Subsection 5-3.2, Prevailing Wages, of the SSPWC is deleted in its entirety and replaced with the following.

The Contractor will post at appropriate conspicuous points at the site of the project a schedule showing determinations of the Director of Industrial Relations of the prevailing rate of per diem wages. It will be the Contractor’s responsibility to obtain copies of the prevailing rate of per diem wages. One source that may be used is the California Department of Industrial Relations website which is currently located at www.dir.ca.gov, or by calling the Prevailing Wage Unit at (415) 703-4774.

The Contractor will comply with Section 1007 of the San Buenaventura Charter. In accordance with Section 1775 of the Labor Code, the Contractor will forfeit as a penalty to the City of San Buenaventura, $25.00 for each calendar day or portion thereof, for each workman paid less than the stipulated prevailing rates for such work or craft in which such workman is employed for any work done under the contract by them or by any subcontractor under them in violation of the provisions of the Charter. In addition to said penalty and pursuant to the said Section 1775, the difference between the stipulated prevailing wage rates and the amount paid to each workman for each calendar day or portion thereof, for which each workman was paid less than the stipulated prevailing wage rate will be paid to each workman by the Contractor. Any sums forfeited under the provisions of this section will be deducted from the payments under this contract by the City of San Buenaventura.

Attention is directed to the provisions in Sections 1777.5, 1777.6 and 3098 of the Labor Code concerning the employment of apprentices by the Contractor or any subcontractor under them.

Section 1777.5 requires the Contractor or subcontractor employing tradesmen in any apprenticeship occupation to apply to the joint apprenticeship committee nearest the site of the public works project and which administers the apprenticeship program in that trade for a certificate of approval. The certificate will also fix the ratio of apprentices to journeymen that will be used in the performance of the contract. The ratio of apprentices to journeymen in such cases will not be less than one to five except:

a) When employment in the area of coverage by the joint apprenticeship committee has exceeded an average of 15 percent in the 90 days before the request for certificate, or

b) When the number of apprentices in training in the area exceeds a ratio of one to five, or

c) When the trade can show that it is replacing at least 1/30 of its membership through apprenticeship training on an annual basis state-wide or locally, or

d) When the Contractor provides evidence that they employ registered apprentices on all of their contracts on an annual average of not less than one apprentice to eight journeymen.

The Contractor is required to make contributions to funds established for the administration of apprenticeship programs if they employ registered apprentices or journeymen in any apprenticeable trade on such contracts

and if other contractors on the public works site are making such contributions.

The Contractor and any subcontractor under them will comply with the requirements of Sections 1777.5 and 1777.6 in the employment of apprentices.

Information relative to apprenticeship standards, wage schedules and other requirements may be obtained from the Director of Industrial Relations, ex-officio the Administrator of Apprenticeship, San Francisco, California, or from the Division of Apprenticeship Standards and its branch offices.

5-3.3 Payroll Records

Section 5-3.3 of the SSPWC is deleted in its entirety and replaced with the following.

The Agency has implemented, and maintains, a labor compliance software service program called “LCPtracker.”

Contractors and subcontractors shall keep accurate payroll records in accordance with Labor Code Section 1776 and shall furnish weekly certified payrolls for their workers and shall input their certified payroll records electronically using LCPtracker within 7 days following the end of the preceding week.

This requirement is in addition to the State of California requirement to upload payrolls into the State DIR electronic system. However, LCPtracker has the functionality to upload the submitted payrolls directly to the State DIR electronic system. In bidding on the Project, it shall be the bidder’s responsibility to evaluate the cost of complying with the above-referenced LCPtracker requirements. Agency will provide materials and information to assist the Contractor with use of the LCPtracker system.

5-4 INSURANCE

Subsection 5-4, Insurance, of the SSPWC is deleted in its entirety and replaced by the following subsections.

5-4.1 General

Contractor will procure and maintain for the duration of the contract the insurance coverages and limits against claims as outlined in the Insurance and Bonding Requirements of the bid package.

Contractor will provide endorsements or other proof of coverage for contractual liability.

Combined single limit per occurrence will include coverage for bodily injury, personal injury, and property damage for each accident.

If Commercial General Liability Insurance or other form with a general aggregate limit is used, the policy will be endorsed such that the general aggregate limit will apply separately to this contract and a copy of the endorsement provided to the City.

Liability policies will contain, or be endorsed to contain the following provisions:

GENERAL LIABILITY AND AUTOMOBILE LIABILITY:

The City, its officers, officials, employees, agents, and volunteers will be covered as insureds as respects: liability arising out of activities performed by or on behalf of the Contractor; products and completed operations of the Contractor; premises owned, occupied or used by the Contractor; or automobiles owned, leased, hired or borrowed by the Contractor. The coverage will contain no special limitations on the scope or protection afforded to the City, its officers, officials, employees, agents, or volunteers.

The Contractor's insurance coverage will be primary insurance as respects the City, its officers, officials, employees, agents, and volunteers. Any insurance or self-insurance maintained by the City, its officers, officials, employees, agents, and volunteers will be excess of the Contractor's insurance and will not contribute with it.

Any failure to comply with reporting provisions of the policies will not affect coverage provided to the City, its officers, officials, employees, agents and volunteers.

The Contractor's insurance will apply separately to each insured against whom claim is made or suit is brought, except with respect to the limits of the insurer's liability.

WORKERS' COMPENSATION AND EMPLOYER'S LIABILITY:

The insurer will agree to waive all rights of subrogation against the City, its officers, officials, employees and volunteers for losses arising from work performed by the Contractor for the City.

ALL COVERAGES:

Each insurance policy required by this subsection will be endorsed to state that coverage will not be suspended, voided, cancelled by either party, reduced in coverage or in limits except after thirty (30) days written notice by certified mail, return receipt requested, has been given to:

CITY ENGINEER
City of San Buenaventura
501 Poli Street
P. O. Box 99
Ventura, CA 93002

The Contractor will provide the City with updated proof of insurance should the Contract Time extend beyond the policy expiration date.

All liability insurance will be on an occurrence basis. Insurance on a claims made basis will be rejected. Any deductibles or self-insured retentions will be declared to and approved by City. The insurer will provide an endorsement to City eliminating such deductibles or self-insured retentions as respects the City, its officials, employees, agents, and volunteers.

Except for Workers Compensation/Employers Liability Insurance, Contractor will furnish to City certificates of insurance and endorsements on forms furnished by City, duly authenticated, giving evidence of the insurance coverages required in this contract and other evidence of coverage or copies of policies as may be reasonably required by City from time to time. Certificate/endorsement for Workers Compensation/Employers Liability insurance will be furnished on State Comp Fund or other industry standard form. Except for worker's compensation insurance, all insurance required herein will be placed with insurers with a Best's Rating of not less than A:VII. Worker's compensation insurance policies will meet the requirements of California law.

All subcontractors employed on the work referred to in this contract will meet the insurance requirements set forth for Contractor. Contractor will furnish certificates of insurance and endorsements for each subcontractor at least five days before the subcontractor entering the job site, or Contractor will furnish City an endorsement including all subcontractors as insureds under its policies.

The Contractor will save, keep and hold harmless the City, its officers, officials, employees, agents and volunteers from all damages, costs or expenses in law or equity that may at any time arise or be claimed because of damages to property, or personal injury received by reason of or in the course of performing work, which may be caused by any willful or

negligent act or omission by the Contractor or any of the Contractor's employees, or any subcontractor. The City will not be liable for any accident, loss or damage to the work before its completion and acceptance.

The cost of such insurance will be included in the various items of work in the Contractor's bid and no additional compensation for purchasing insurance or additional coverages needed to meet these requirements will be allowed.

In the event that any required insurance is reduced in coverage, cancelled for any reason, voided or suspended, Contractor agrees that City may arrange for insurance coverage as specified, and Contractor further agrees that administrative and premium costs may be deducted from payments due to the Contractor.

5-4.2 Responsibility for Damage

In addition to the provisions of Subsection 5-4 (Insurance) of the SSPWC as between the City and Contractor, Contractor will take and assume all responsibility for the work as stated herein and/or shown on the plans.

The Contractor will bear all losses and damages directly or indirectly resulting to him, to the City, its officers, employees, and agents, or to others on account of the performance or character of the work, unforeseen difficulties, accidents or any other causes whatsoever.

The Contractor will assume the defense of and indemnify and save harmless the City of San Buenaventura, its officers, employees, and agents, from and against any and all claims, losses, damage, expenses and liability of every kind, nature, and description, directly or indirectly arising from the performance of the contract or work, regardless of responsibility for negligence, and from any and all claims, losses, damage, expenses, and liability, howsoever the same may be caused, resulting directly, or indirectly from the nature of the work covered by the contract, regardless of responsibility for negligence, to the fullest extent permitted by law. In accordance with Civil Code section 2782, nothing in this Subsection 5-4.2 or in Subsection 5-4 of the Standard Specifications will require defense or indemnification for death, bodily injury, injury to property, or any other loss, damage or expense arising from the sole negligence or willful misconduct of the City, or its agents, servants or independent contractors who are directly responsible to the City, or for defects in design furnished by such persons. Moreover, nothing in this Subsection 5-4.2 or in Subsection 5-4 will apply to impose on the Contractor, or to relieve the City from, liability for active negligence of the City.

The City does not, and will not, waive any rights against the Contractor which it may have by reason of the aforesaid hold harmless agreements because of the acceptance by the City, or deposit with City by Contractor, of any insurance policies hereinafter described in Subsection 5-4 of the Standard Specifications. The aforesaid hold harmless agreement by Contractor will apply to all damages and claims for damages of every kind suffered, or alleged to have been suffered by reasons of any of the aforesaid operations of Contractor, or any subcontractor, regardless of whether or not such insurance policies are determined to be applicable to any of such damages or claims for damages.

No act by the City, or its representatives in processing or accepting any plans, in releasing any bond, in inspecting or accepting any work, or of any other nature, will in any respect relieve the Contractor or anyone else from any legal responsibility, obligation or liability he might otherwise have.

5-7.1 Work Site Safety

The following is added to subsection 5-7.1 of the SSPWC.

5-7.1.3 Protection of the Work and Public Safety

Reference is made to Section 3-13 *Completion, Acceptance, and Warranty*, and Section 5-4.2, *Responsibility for Damage* of the SSPWC. As modified here in by the special provisions. The Contractor is responsible for protecting its work and public safety at the work site from the time the contractor first mobilizes onto the site and until final acceptance.

In order to protect the public, the Contractor shall provide whatever means necessary to protect the public at the work site. The Contractor is responsible for determining and then implementing all means necessary to protect and secure the site. The Contractor can expect for unauthorized persons to enter onto the work site both during work hours and outside of construction work hours. The City will not be responsible for any damage to the work, damage or theft of Contractor's equipment and materials, or for Contractor's failure to provide adequate measures to protect the public from harm.

At a minimum, the Contractor shall install and maintain temporary fencing, at least 6-feet in height with lockable gates along the perimeter of its staging/storage and stockpile area in order to secure materials and equipment and to protect the public from harm. See subsection 5-7.7.2 of the SSPWC.

At a minimum, Contract shall install and maintain temporary ~~fencing,~~ plating (plywood or steel), ~~temporary backfill~~ or similar measures in order to protect the public from any excavations that are not backfilled prior to the end of each workday that may pose a danger to the public. See subsection 5-7.8 of the SSPWC.

Payment for Protection of the Work and Public Safety shall be considered included in other listed items of the bid, and no separate payment will be made thereof.

5-8 HAZARDOUS MATERIAL

The following Subsection will be added to Section 5 of the SSPWC:

For any excavation which extends more than four feet below existing grade, the Contractor will promptly, and before the conditions are disturbed, notify the Engineer, in writing, of 1) any material that the Contractor believes may be hazardous waste, as defined in Section 25117 of the Health and Safety Code, which is required to be removed to a Class I, Class II, or Class III disposal site in accordance with provisions of existing law, 2) subsurface or latent physical conditions at the site differing from those indicated, or 3) unknown physical conditions at the site of any unusual nature, different materially from those ordinarily encountered and generally recognized as inherent in work of the character provided for in the Contract Documents.

Upon notification by the Contractor that any of the conditions described above exist, the Engineer will promptly investigate. The rights and obligations of the Engineer and the Contractor with regard to said conditions (including, but not limited to, the procedures for procuring change orders and filing claims) will be specified by the provisions of Subsection 2-9 (Changed Conditions) of the SSPWC.

If a dispute arises between the City and the Contractor whether the conditions materially differ, involve hazardous waste, or cause a change in the Contractor's cost or time required for performance of the work, the Contractor will not be excused from any scheduled completion date provided for by the contract, but will proceed with all work to be performed under the contract. The Contractor will retain all rights provided by Subsection 2-9, Disputed Work, of the SSPWC.

If the Engineer determines that material called to the Engineer's attention by the Contractor is hazardous waste, or if the Engineer otherwise discovers the existence of hazardous waste, the Contractor will be responsible for removal and disposal of the hazardous waste by qualified personnel and appropriate equipment in the manner required by law as

directed by the Engineer, subject to the provisions of Section 2 (Scope of Work) and Section 7 (Measurement and Payment) of the SSPWC.

6 PROSECUTION AND PROGRESS OF THE WORK

6-1 CONSTRUCTION SCHEDULE AND COMMENCEMENT OF THE WORK

Section 6-1,Construction Schedule and Commencement of the Work is deleted in its entirety and replaced by the following subsections.

6-1.1 Construction Schedule

After notification of award and before starting any work, the Contractor will submit a Construction Schedule to the Engineer as required by these Specifications. The Engineer will review the Construction Schedule with the Contractor within fifteen (15) days after the award.

6-1.2 Content of Construction Schedule

The Construction Schedule, and any updated Construction Schedule, will meet the following requirements:

1. Schedules shall be suitable for monitoring progress of the Work.

2. Schedules shall provide necessary data about the time for the Engineer's decisions.

3. Schedules shall be sufficiently detailed to demonstrate adequate planning for the Work.

4. Schedules shall represent a practical plan to complete the Work within the Contract Time.

5. Schedules shall show the critical path method for completing the Work.

6. Schedule shall be submitted to the Engineer in printed paper format and computer digital electrical format on compact disc (CD).

The Engineer's review of the form and general content of the Construction Schedule and any updated Construction Schedules is for the purpose of determining if the listed requirements are satisfied.

6-1.3 Effect of Construction Schedule

The Construction Schedule, and any updated Construction Schedules, will represent a practical plan to complete the Work within the Contract Time. Extension of any schedule beyond the Contract Time will not be acceptable. Schedules showing the Work completed in less than the Contract may be acceptable if judged by the Engineer to be practical. Acceptance of such a schedule by the Engineer will not change the Contract Time. The Contract Time, not the Construction Schedule, will control in determining liquidated damages payable by the Contractor and in determining any delay.

If a schedule showing the Work completed in less than the Contract Time is accepted, the Contractor will not be entitled to extensions of the Contract Time for Excusable Delays or Compensable Delays or to adjustments of the Contract Sum for Compensable Delays until such delays extend the completion of the Work beyond the expiration of the Contract Time.

The Contractor will plan, develop, supervise, control, and coordinate the performance of the Work so that its progress and the sequence and timing of Work activities conform to the current accepted Construction Schedule. The Contractor will continuously obtain from Subcontractors information and data about the planning for and progress of the Work and the delivery of equipment, will coordinate and integrate such information and data into updated Construction Schedules, and will monitor the progress of the Work and the delivery of equipment. The Contractor will act as the expeditor of potential and actual delays, interruptions, hindrances, or disruptions for its own forces and those forces of Subcontractors. The Contractor will cooperate with the Engineer in developing the Construction Schedule and updated Construction Schedules.

The Engineer’s review and comments about any schedule or scheduling data will not relieve the Contractor from its sole responsibility to plan for, perform, and complete the Work within the Contract Time. Review and comments about any schedule will not transfer responsibility for any schedule to the Engineer or the City nor imply their agreement with (1) any assumption upon which such schedule is based or (2) any matter underlying or contained in such schedule.

The Engineer’s failure to discover errors or omissions in schedules that have been reviewed, or to inform the Contractor that the Contractor, Subcontractors, or others are behind schedule, or to direct or enforce procedures for complying with the Construction Schedule will not relieve the Contractor from its sole responsibility to perform and complete the Work within the Contract Time and will not be a cause for an adjustment of the Contract Time or the Contract Sum.

The Contractor will perform the Work in accordance with the currently accepted Construction Schedule.

6-1.4 Commencement of Contract Time

The Contract Time will commence when the City issues a notice to proceed. The Work will start within fifteen (15) days thereafter and be diligently prosecuted to completion with the time provided in the Specifications.

6-2 PROSECUTION OF THE WORK

The following subsection is added to Section 6-2 of the SSPWC.

6-2.1 Work Hours

Except for work of an emergency nature, as determined by the City, the Contractor's construction activities are subject to limited work hours at the following locations and times:

A. General:

7:00 A.M. to 5:00 P.M., Monday through Friday (except holidays). Work performed outside of these hours, Saturdays, Sundays and legal holidays shall be by approval of the City Engineer only. The Contractor shall be responsible for all inspection costs for work done outside of these work hours.

B. Work Activities within City Streets:

Reference is made to the General Conditions of the Encroachment Permit. Work activities within City Streets and/or work that can potentially impact the normal flow of traffic within City streets shall be restricted to the hours specified in the encroachment permit.

6-3 TIME OF COMPLETION

6-3.1 General

The following paragraph is added to subsection 6-3.1, General, of the SSPWC:

If the Bid Proposal sets the time for completion based on Calendar Days, the Contractor can only work on Working Days as defined in Subsection 1-2 "Working Day." The Contractor will be granted additional Working Days beyond the Time of Completion in accordance with items e and f of

subsection 1-2 “Working Day.” The appropriate number of Calendar Days will be added to the Time for Completion that equates to the earned additional Working Days. Additional Calendar Days will be added for each holiday and other non-working days that occur within the time frame that the Time of Completion is extended.

6-3.3 Night Work

The following paragraph is added to Section 6-3 of the SSPWC:

Work between the hours of 5 p.m. and 7 a.m. of the following day will not be permitted unless specifically provided for in the contract documents or unless the Contractor receives prior written approval by the City.

6-4 DELAYS AND EXTENSIONS OF TIME

Subsections 6-4.1 to 6-4.4 are deleted and replaced with the following subsections.

6-4.1 General

If delays are caused by unforeseen events beyond the control of the Contractor, such delays will entitle the Contractor to an extension of time as provided herein, but the Contractor will not be entitled to damages or additional payment due to such delays except as otherwise provided herein. Excusable delay may include: war, government regulation, labor disputes outside the contemplation of the parties, strikes outside the contemplation of the parties, fires, floods, changes to the Work as identified herein, or other specific events that may be further described in the Specifications.

Delays to the project caused by labor disputes or strikes involving trades not directly related to the project, or involving trades not affecting the project as a whole will not warrant an extension of time.

The City will not grant an extension of time for a delay by the Contractor’s inability to obtain materials unless the Contractor furnishes to the Engineer documentary proof. The proof shall be provided in a timely manner in accordance with the sequence of the Contractor’s operations and accepted construction schedule.

Should delays be caused by events other than those included herein, the Engineer may, but is not required to, deem an extension of time to be in the City’s best interests.

6-4.2 Extensions of Time

If granted, extensions of time will be based upon the effect of delays to the critical path of the Work as determined by the current accepted Construction Schedule. Delays to minor portions of the Work that do not affect the critical path will not be eligible for extensions of time.

6-4.3 Payment for Delays

Any payment for compensable delay will be based upon actual costs as set forth in Subsection 6-10 excluding, without limitation, what damages, if any, the Contractor may have reasonably avoided. The Contractor understands that this is the sole basis for recovering delay damages and explicitly waives any right to calculate daily damages for office overhead, profit, or other purported loss, using different formulas including, without limitation, the Eichleay Formula.

6-4.4 Written Notice and Report

If the Contractor desires payment for a delay or an extension of time, it will give the Engineer written notice of such request not later than the time limit set forth in Proposal for submitting a claim after the event or occurrence giving rise to a delay claim. Failure to submit a written request within such amount of time will result in the Contractor waiving its delay claim.

Any such claim for payment or an extension of time shall be in the form required by the “Claims” sections of these Specifications.

In no event will the City grant the Contractor an extension of time if the delay is within the Contract Time as identified by the Contract Documents.

6-9 LIQUIDATED DAMAGES

Subsection 6-9, Liquidated Damages, of the SSPWC is deleted in its entirety and replaced by the following subsections.

6-9.1 Failure to Complete Work on Time

If all the work called for under the contract is not completed before or upon the expiration of the Contract Time, damage will be sustained by the City. Since it is and will be impracticable to determine the actual damage which the City will sustain in the event of and by reason of such delay, it is therefore agreed that the Contractor will pay to the City the sum specified in the Proposal for each and every calendar day beyond the time prescribed to complete the work not as a penalty, but as a predetermined liquidated damage. The Contractor agrees to pay such liquidated

damages as are herein provided, and in case the same are not paid, agrees that the City may deduct the amount thereof from any money due or that may become due to the Contractor under the contract.

6-9.2 Failure to Keep Traffic Lanes Open, Coordinate Signal Turn-ons, Striping and Signing, and Signal System Disruption

If traffic lanes are not kept open for public use, on the days, at the times, and in the manner specified in the Special Provisions of the Specifications, and the City approved traffic control plans, damage will be sustained by the City and its residents. Damage will also be sustained by the City and its residents if signal operations, roadway striping, and signing are not coordinated and completed. Since it is, and will be, impracticable to determine the actual damage which the City and its provisions of the Special Provisions of the Specifications and the City approved traffic control plans, City and Contractor agree that Contractor will pay to City, not as penalty, but as predetermined liquidated damages, $500 per day for each of the following items (except for 6-9.2(a) which is $500 per hour per lane), for any period of time during the day in which the infraction occurs:

(a) Contractor fails to keep open any traffic lane for public use as required by the Special Provisions of the Specifications and the City approved traffic control plans; or
(b) Contractor fails to temporarily stripe the roadway prior to opening up the roadway for normal vehicular travel immediately following resurfacing; or
(c) Contractor fails to permanently restripe the roadway and remove any conflicting striping or delineation within seven (7) calendar days following resurfacing of that section of roadway. At the discretion of the Engineer, temporary paint may be installed prior to permanent striping so that traffic signal detection or miscellaneous roadway work items, including the raising of utility covers, may be completed. Temporary striping shall be in place for no longer than fourteen (14) calendar days; at which time the Contractor will have an additional seven (7) calendar days to completely install permanent striping; or
(d) Contractor fails to remove signs which conflict with new striping or fails to install signs required by the Contract Documents which are necessary for safe traffic movement; or
(e) Contractor fails to install traffic signal detection within fourteen (14) calendar days following the completion of a resurfacing project. Traffic signal detection will be considered installed when the detector actuates the traffic signal for an arriving vehicle; or
(f) Contractor fails to complete striping, install traffic signal detection and/or install required signs prior to a traffic signal being turned on.

A traffic signal shall not be turned on until roadway striping, signing and traffic signal detection has been completed; or

(g) Contractor fails to replace interconnect that has been removed either inadvertently or as part of the Contract Documents. Liquidated damages will become effective one day following the inadvertent removal of interconnect or one day after the Engineer/Contractor agreed upon time limit for a planned removal of interconnect.

The Contractor agrees to pay such liquidated damages as are provided for in this paragraph, and in case the same are not paid, Contractor agrees that City may deduct the amount of such liquidated damages from any money that is due or that may be due the Contractor under the contract.

6-9.3 Failure to Replace Temporary Resurfacing within 30 Calendar Days

If temporary resurfacing is not replaced with permanent pavement resurfacing within 30 calendar days of beginning demolition work on a street, if required in the Contract Documents, City will sustain damages. Since it is and will be impracticable to determine what actual damages the City will sustain as a result of the Contractor failing to comply with the Contract Documents, the Contractor agrees to pay City the sum of $500 per calendar day per City block for each and every calendar day that a street does not have temporary resurfacing replaced with permanent resurfacing as required by the Contract Documents. This sum is not a penalty, but predetermined liquidated damages. The Contractor agrees to pay such liquidated damages as are provided for in this paragraph, and in case the same are not paid, Contractor agrees that City may deduct such liquidated damages from any money that is due or may become due to the Contractor under the Contract.

6-9.4 Failure to Reestablish Water Service

If a disrupted water service is not reestablished within the designated period allowed for in the Specifications, the City will sustain damages. Since it is and will be impracticable to determine what actual damages the City will sustain as a result of the Contractor failing to comply with the Contract Documents, the Contractor agrees to pay City the sum of $500 per hour that one or more water services are not pressurized and ready to provide safe drinking water. This sum is not a penalty, but predetermined liquidated damages. The Contractor agrees to pay such liquidated damages as are provided for in this paragraph, and in case the same are not paid, Contractor agrees that City may deduct such liquidated damages from any money that is due or may become due to the Contractor under the Contract.

6-10 DISPUTES AND CLAIMS; PROCEDURE

Section 6-10, Disputes and Claims; Procedure, is added to the SSPWC to read as follows:

6-10.1 General

"Claim" means a written demand or assertion by the Contractor that seeks an adjustment or interpretation of the terms of the Contract Documents, payment of money, extension of time, or other relief with respect to the Contract Documents, including a determination of disputes or matters in question between the City and the Contractor arising out of or related to the Contract Documents or the performance of the Work, and claims alleging an unforeseen condition or an act, error, or omission by the City, the Engineer, their agents or employees. "Claim" does not mean, and the Claims procedures herein do not apply, to the following:

1. Claims respecting penalties for forfeitures prescribed by statute or regulations which a government agency is specifically authorized to administer, settle, or determine.

2. Claims respecting personal injury, death, reimbursement, or other compensation arising out of or resulting from liability for personal injury or death.

3. Claims respecting a latent defect, breach of warranty, or guarantee to repair.

4. Claims respecting stop notices.

If a Claim is subject to the Change Order procedures, the Claim arises upon the issuance of a written final decision denying in whole or in part the Contractor's Change Order Request. If a Claim is not subject to the Change Order Procedures, the Claim arises when the Contractor discovers, or reasonably should discover, the condition or event giving rise to the Claim.

6-10.2 Form

A Claim shall include the following:

1. A statement that it is a Claim and a request for a decision.

2. A detailed description of the act, error, omission, unforeseen condition, event or other condition giving rise to the Claim.

3. If the Claim is subject to the Change Order procedures, a statement demonstrating that a Change Order Request was timely submitted and denied.

4. A detailed justification for any remedy or relief sought by the Claim, including to the extent applicable, the following:

   a) If the Claim involves extra work, a detailed cost breakdown claimed. The breakdown shall be provided even if the costs claimed have not been incurred when the Claim is submitted.

   b) To the extent costs have been incurred when the Claim is submitted, the Claim shall include actual cost records (including, without limitation, payroll records, material and rental invoices) demonstrating that costs claimed have actually been incurred.

   c) To the extent costs have not yet been incurred at the time the Claim is submitted, actual cost records shall be submitted on a current basis not less than once a week during any periods costs are incurred. A cost record will be considered current if submitted within 7 days of the date the cost reflected in the record is incurred. At the Engineer's request, claimed extra costs may be subject to further verifications procedures (such as having an inspector verify the performance of alleged extra work on a daily basis).

5. If the Claim involves an error or omission in the Contract

   Documents:

   a) An affirmative representation that the error or omission was not discovered before submitting a bid for the Contract; and

   b) A detailed statement demonstrating that the error or omission reasonably should not have been discovered by the Contractor, its Subcontractors and suppliers, before submitting a bid for the Contract.

6. If the Claim involves an extension of the Contract Time, written documentation demonstrating the Contractor's entitlement to a time extension.

7. If the Claim involves an adjustment of the Contract Sum for delay, written documentation demonstrating the Contractor's entitlement to such an adjustment.

8. A personal certification from the Contractor that reads as follows:

"I, _____, BEING THE _____ (MUST BE AN OFFICER) OF _____ (GENERAL CONTRACTOR), DECLARE UNDER PENALTY OF PERJURY UNDER CALIFORNIA LAW, AND DO PERSONALLY CERTIFY AND ATTEST THAT I HAVE THOROUGHLY REVIEWED THE ATTACHED CLAIM FOR ADDITIONAL COMPENSATION AND/OR EXTENSION OF TIME, AND KNOW ITS CONTENTS, AND SAID CLAIM IS MADE IN GOOD FAITH; THE SUPPORTING DATA IS TRUTHFUL AND ACCURATE; THAT THE AMOUNT REQUESTED ACCURATELY REFLECTS THE CONTRACT ADJUSTMENT FOR WHICH THE CONTRACTOR BELIEVES CITY IS LIABLE; AND, FURTHER, THAT I AM FAMILIAR WITH CALIFORNIA PENAL CODE § 72 AND CALIFORNIA GOVERNMENT CODE § 12650, ET SEQ., PERTAINING TO FALSE CLAIMS, AND FURTHER KNOW AND UNDERSTAND THAT SUBMITTING OR CERTIFYING A FALSE CLAIM MAY LEAD TO FINES, IMPRISONMENT, AND/OR OTHER SEVERE LEGAL CONSEQUENCES."

6-10.3 Claims Submitted to Engineer

Within 30 days after the Claim arises, the Contractor will submit its Claim to the Engineer for a decision. Regardless of any Claim submittal, or any dispute regarding a Claim, unless otherwise directed by the Engineer, the Contractor will not cause any delay, cessation, or termination of the Work, but will diligently proceed with the performing the Work in accordance with the Contract Documents. Except as otherwise provided, the City will continue to make payments in accordance with the Contract Documents.

6-10.4 Claim is Prerequisite to other Remedy

The Contractor understands and agrees that submitting a claim in accordance with these Specifications is an express condition precedent to the Contractor's right to otherwise pursue a claim whether through alternative dispute resolution or by litigation. Should the Contractor fail to submit a claim in accordance with these Specifications, including the time limits set forth herein, it will waive any right to a remedy, whether in law or equity, it might otherwise have pursuant to the Contract Documents or applicable law.

6-10.5 Decision on Claims

The Engineer will promptly review Claims submitted by the Contractor in accordance with these Specifications. Should the Engineer require additional supporting evidence to evaluate the claim, the Engineer will request such additional information in writing. Any such requested data will be furnished not later than 10 days after the Contractor receives the Engineer's request.

The Engineer will render a decision not later than 30 days after either receiving the Claim or the deadline for furnishing additional supporting data, whichever is later. If the Claim amount is more than $50,000, the time period will be extended to 60 days. If the Engineer fails to render a decision within the time period established herein, then the Claim will be deemed denied. The Engineer's decision will be final and binding unless appealed in accordance with these Specifications.

6-10.6 Appeal of Engineer's Decision to the Public Works Director

Should the Contractor dispute the Engineer's decision, the Contractor shall have 30 days to submit an appeal of that decision to the Public Works Director. The appeal shall include all necessary supporting data. The Public Works Director or their designee shall conduct a hearing on a date mutually convenient to the City and the Contractor at which relevant evidence will be taken regarding the claim or dispute. The Public Works Director or their designee shall have discretion to determine the facts and will issue a written decision within 30 days of the completion of the hearing.

The Public Works Director's decision on a Claim will include a statement substantially as follows:

"This is a decision pursuant to the General Specifications or your contract. If you are dissatisfied with the decision, and have complied with the procedural requirements for asserting claims, you may have the right to mediation, arbitration or litigation. Should you fail to take appropriate legal action within certain dates of this decision as outlined in section 6-10 of the General Specifications, this decision will become final, binding and not subject to mediation, arbitration, litigation or appeal."

6-10.7 Mediation

If the Contractor disputes the Public Works Director's decision, then the Contractor shall demand mediation as per section 6-10.7 within 30 days of the Public Works Director's decision.

If the parties cannot agree on the appointment of a mediator within 30 days of mediation being demanded, then the appointment of the mediator will be conducted by the American Arbitration Association under its

Construction Industry Mediation Rules. California *Evidence Code* §1115 et seq. regarding the confidentiality of mediations will be applicable to the mediation process.

The mediation process will not alter or modify the time limitations with respect to the claim process outlined in sections 6-10.1 through 6-10.6 above, and the City's conduct or settlement negotiations during the mediation process will not be considered a waiver by the City of its right to assert a failure to comply with the claim procedures as a defense.

The mediator's fee will be borne equally by the parties to the mediation.

The parties may be, but are not required to be, represented by an attorney during the mediation process.

6-10.8 Arbitration

If the mediation process outlined in section 6-10.7 above does not result in a resolution of the disputed matter, the parties may submit the dispute to arbitration before a single arbitrator after Final Completion of the Work. A demand for arbitration must be made within 30 days of completion of the mediation. The arbitrator will be a retired judge or an attorney with expertise in public works contracts. If the parties cannot agree on the appointment of the arbitrator within 30 days of arbitration being demanded, then the arbitration process will be terminated.

The arbitration hearing shall take place in Ventura County. With the exception of the selection of the arbitrator, the arbitration process will be conducted as per California *Code of Civil Procedure* §1280 et seq. Discovery will be permitted as per the California Civil Discovery Act (*Code of Civil Procedure* §2016.010, et seq.). The arbitration award will be made under and in accordance with California law, supported by substantial evidence, and in writing.

The arbitrator's fee and any administrative fees will be borne equally by the parties to the arbitration, but each party to the arbitration will otherwise bear its own fees and costs.

The arbitration award will become binding unless one or more of the parties files a petition with the Ventura County Superior Court pursuant to California *Code of Civil Procedure* §1285 et seq within 100 days after the arbitration award is issued by the arbitrator to correct or vacate the award. If the arbitration award becomes binding, it may be entered as a judgment in the Ventura County Superior Court pursuant to a motion to confirm. A motion to correct or vacate the arbitration award shall be heard by the Superior Court de novo, without a jury, using the substantial evidence

standard of review; as a result, the provisions of *Code of Civil Procedure* §1986.2 and §1286.6 do not apply to a motion to correct or vacate the arbitration award under this section, and as a result, the Superior Court can correct or vacate the arbitration award on any legal or equitable basis, including based on an error of law.

6-10.9 Writ of Mandate

If the arbitration process outlined in section 6-10.8 above does not occur, the Contractor may file a petition for writ of mandate in the Ventura County Superior Court seeking judicial review of decision of the Public Works Director or their designee within 90 days of the issuance of the decision pursuant to *Code of Civil Procedure* §1094.5.

6-10.10 Waiver of Jury Trial

By executing these contract documents, all parties agree to have disputes and/or controversies regarding the Project resolved in accordance with section 6-10 of this Agreement. **Thus, all parties hereby waive their right to a jury trial for any disputes or controversies arising under this Agreement**.

7 MEASUREMENT AND PAYMENT

7-2 LUMP SUM WORK

Subsection 7-2, Lump Sum Work, of the SSPWC is deleted in its entirety and replaced by the following:

Items for which quantities are indicated as "Lump Sum," "L.S.," or "Job" will be paid for at the price indicated in the Proposal. Such payment will be full compensation for all costs for labor, equipment, materials and plant necessary to furnish, construct and install the lump sum item of work, complete, in place, and for all necessary appurtenant work, including, but not limited to, all necessary cutting, patching, repair and modification of existing facilities, and clean up of site.

Contractor will furnish three copies of a detailed schedule which breaks down the lump sum work into its component parts and cost for each part, in a form and sufficiently detailed as to satisfy Engineer that it correctly represents a reasonable apportionment of the lump sum. This schedule is subject to approval by Engineer as to both the components into which the lump sum item is broken down, and the proportion of cost attributable to each component.

This schedule will be the basis for progress payments for the lump sum work and shall be submitted to the Engineer for review and revisions made to allow acceptance by the Engineer prior to submittal of the first progress payment request.

7-3 PAYMENT

7-3.2 Partial and Final Payment

The third paragraph of Subsection 7-3.2 of the SSPWC, Partial and Final Payment, is deleted and is replaced by the following paragraph:

From each progress estimate, 5% will be deducted and retained by the City as retention, and the remainder, less the amount of previous payments, will be paid to the Contractor. All retained amounts will be paid to the Contractor on the first working day following 35 days after the date of recordation of the Notice of Completion for the work. Retained amounts may be placed in an interest earning escrow account, provided the Contractor notifies the City in writing within ten (10) business days after receipt of a Notice of Award.

The following paragraphs are added to Subsection 7-3.2 of the SSPWC, Partial and Final Payment, to read as follows:

Progress payment paid by the City as contemplated herein, will be contingent upon the Contractor submitting, in addition to any additional documents, an updated Construction Schedule in the form prescribed by these Contract Documents. Failure of the Contractor to submit an acceptable updated Construction Schedule will result in the City withholding partial payment, without liability to the City, until such an acceptable updated Construction Schedule is submitted. Nothing herein will allow the Contractor to suspend or slow progress of the Work.

Final payment will not be made until punch-list items are satisfactorily completed, record drawings are satisfactorily completed, and all operations and maintenance manuals and other specified submittals are turned in and approved by the Engineer.

7-4 PAYMENT FOR EXTRA WORK

7-4.2.3 Basis for Establishing Costs

Subsection 7-4.2.3, Tool and Equipment Rental is modified where the first paragraph is replaced with “No payment will be made for the use of tools which have a replacement value of $500 or less”, and where the second paragraph is replaced with “Regardless of ownership, the rates to be used

in determining the equipment usage costs will not exceed those listed for the same or similar equipment in the California State Department of Transportation publication of Labor Surcharge and Equipment Rates effective for the period of usage."

7-4.3 Mark up

Subsection 7-4.3, Mark Up, is deleted in its entirety and replaced by the following subsection.

(a) Work by the Contractor. The following percentages will be added to the Contractor's costs and will constitute the markup for all overhead and profits.

1) Labor……20
2) Materials……..15
3) Equipment Rental……..15
4) Other Items and Expenditures….15

To the sum of the costs and markups provided for in this subsection, 1 percent will be added as compensation for bonding.

(b) Work by Subcontractors. When all or any part of the extra work is performed by a Subcontractor, the markup established in 7-4.3 (a) will be applied to the Subcontractor's actual cost of such work. A markup of 5 percent of the subcontracted portion of the extra work may be added by the Contractor.

7-4.4 Daily Reports

Add the following paragraph to subsection 7-4.4, Daily Report:

If disagreement continues regarding extra work, the Contractor may seek compensation in accordance with the Claims procedure set forth herein. Daily Reports required by this subsection shall be made part of the Claim as supporting data for the Claim. Failure to submit any daily report by the close of the next working day shall waive the Contractor's right to payment for extra work for that day.

100-1 TERMINATION OF AGENCY LIABILITY

The following subsection is added to the SSPWC.

Before receiving final payment, the Contractor will execute a "Release of Contract" form which will operate as, and will be a release to the City, the

City Council, and each member of the City Council and their agencies, from all claims and liability to the Contractor for anything done or furnished for, or relating to, the work or for any act of neglect of the City of any person relating to or affecting the work, except the claim against the City for the remainder, if any there be, of the amounts kept or retained as provided in Subsections 7-3 of the Standard Specifications and except for any unsettled claims listed on said form which have been filed in compliance with the requirements for making claims.

400 EXISTING IMPROVEMENTS

402-2 PROTECTION

The following subsection is added to Subsection 402-2 of the SSPWC.

402-2.1 Incorrect Location of Utilities

If the Contractor, while performing the work enumerated in the contract, discovers utility facilities not identified correctly or omitted in the contract plans or specifications by the City, they will immediately notify the City and utility owner in writing.

402-4 RELOCATION

The following subsection is added to Subsection 402-4 of the SSPWC.

402-4.1 Responsibility of Utility Removal or Relocation

The City will be responsible to arrange for the timely removal, repair, or relocation of existing utilities located within the project limits if such utilities are not correctly identified in the contract plans or specifications by the City. The City will have the sole discretion to perform repairs or relocation work or permit the Contractor to do such repairs or relocation.

402-5 DELAYS DUE TO UTILITY CONFLICTS

The following paragraphs are added to Subsection 402-5 of the SSPWC.

Actual loss, as used in this Subsection, will be understood to include no items of expense other than idle time of equipment and necessary payments for idle time of workers, cost of extra moving of equipment, and cost of longer hauls. Compensation for idle time of equipment and idle time of workers will be determined by Subsection 402-5.1 and no markup will be added in either case for overhead and profit. The cost of extra moving of equipment and the cost of longer hauls will be paid for as extra work.

The following subsection is added to Subsection 402-5 of the SSPWC.

402-5.1 Calculating Idle Time

Equipment idle time will be calculated in accordance with Subsection 7-4.2.3 and based upon the actual normal working time during which the delay condition exists, but in no case will exceed 8 hours in any one day. The days for which compensation will be paid will be the calendar days, excluding Saturdays, Sundays and legal holidays, during the existence of the delay.

Worker idle time will be calculated in accordance with Subsection 7-4.2.1.

SPECIAL PROVISIONS

ACKNOWLEDGEMENT

CITY OF SAN BUENAVENTURA
PUBLIC WORKS DEPARTMENT
ENGINEERING DIVISION

Interim Fire Station No.7

Specification No. 2025-010

These technical specifications have been prepared under the direction of the following profession Civil Engineer, licensed by the State of California

4-30-26

Ling Liu, P.E
Civil Engineer, C.E. 93359

Date

SECTION 900 - GENERAL

900-1 SUMMARY OF WORK

The project involves preparing a 1.9-acre site for an interim fire station. The tasks include:

- Excavation and Dewatering
- Rough grading
- Constructing concrete foundations
- Constructing bioswale and irrigation system
- Connecting electrical and telecommunication service
- Trenching for utilities
- Installing sewer, water, stormwater services and appurtenances.
- Constructing Trash Enclosure
- Paving a concrete driveway, sidewalk and retaining walls.

The interim fire station consists of three modular buildings: an apparatus bay, an office, and a gym. The three modular buildings are purchased by the city and the vendor only furnishes the office and gym. The contractor is responsible for the electrical, mechanical, and plumbing work in the apparatus bay to support fire department operations.

900-2 INVESTIGATION OF SITE CONDITIONS

Bidders are urged to visit the site of the work and, by their own investigations, satisfy themselves as to the existing conditions affecting the work to be completed as part of this project. If the bidder chooses not to visit the site or conduct investigations, the bidder will nevertheless be charged with knowledge of conditions which reasonable inspection and investigation would have disclosed.

900-3 UTILITIES

The Contractor is responsible for maintaining the existing electrical service until Southern California Edison (SCE) replaces the service pole on-site in collaboration with the project. The Contractor shall manage all exterior electrical equipment, including a 300-kW generator purchased by the city. Additionally, the city will acquire interior IT equipment and fire alerting dispatch equipment for all three modular buildings.

The Contractor or subcontractor shall coordinate and obtain a fire alerting dispatch installation certificate from the equipment vendor, USDD. The Contractor is also responsible for managing the exterior utility connection in collaboration with the vendor for the interim office and gym, who performs the furnishing and interior work under the purchasing agreement. Additionally, the Contractor is accountable for completing the utility installation in the apparatus bay, including all mechanical, plumbing, and electrical connections, as well as the fire sprinkler system, fire alarm system, and fire dispatching system, as detailed in the various plans in Drawing 2025-D-010.

900-4 SUBMITTALS

The Contractor shall provide the following submittals prior to starting construction:

Project Construction Schedule, Sequence and Phase Plan
Site's Preconstruction Video, 2 copies in color on flash drive
Traffic Control Plan
SWPPP
Waste Diversion Plan
Copy of City Business License (Prime and Subcontractors)
Emergency Phone Call List
Letters Identifying Site Authorized Contractor's Representative or "Superintendent" and Contractor's "Competent Person"
Notifications to Residents
Cutsheet of the Equipment and Materials
CARB Fleet Compliance Submittal

Work on the project site shall not commence until the City accepts all required submittal items necessary to start the work, as determined by the Engineer, and upon receipt of a written Notice to Proceed. Any work performed after the written Notice to Proceed, that requires a submittal, shall not commence until such submittal is accepted.

900-5 WORKMANSHIP AND STANDARD OF CARE

The Plans and specifications are intended to provide sufficient detail for providing installations that are of a high quality. For all items of work and work of various trades, the Contractor is expected to provide workmanship that meets or exceeds the accepted industry standard for each item of work. Workers are expected to be competent and experienced in their respective trade or to at least be adequately mentored on the job site. Should any specifications or Plans not provide adequate details for the materials or installation requirements of any item of work, the Contactor shall install such item in accordance with the Standard Specifications for Public Works Construction (SSPWC). If the SSPWC does not address a particular work item, the Contractor shall install said item in accordance with the generally accepted industry standard unless the City provides additional details to the Contractor, in which case the City's directives prevail.

900-6 VANDALIZED EQUIPMENT

Contractor shall remove all graffiti from equipment used on project sites within the City and from all surfaces on a project site. Graffiti shall be removed or painted over within 24 hours of notification from the City Engineer or designee. Contractor shall remove all graffiti from equipment used on project sites within the City and from all surfaces on a project site. Graffiti shall be removed or painted over within 24 hours of notification from the City Engineer or designee.

900-7 STATEMENT OF PROJECT UNDERSTANDING

The Contractor or listed Subcontractor shall have relevant experience to the project scope. The Contractor shall submit a Statement of Project Understanding in the space provided in the proposal of these specifications with their proposal. This statement shall be used to assist in the bid evaluation process to ensure the contract is awarded to a contractor with a clear understanding of this project.

SECTION 901 - MOBILIZATION

901-1 SCOPE OF WORK

Mobilization shall consist of preparatory work and operations, including, but not limited to, those necessary for the movement of personnel, equipment, supplies, and incidentals to the project site. Mobilization shall additionally include the establishment of any temporary facilities and the submittal of a detailed construction schedule and other submittals that are required by the City before mobilizing onto the work site.

Any other costs of work in advance of construction operations and not directly attributable to any specific bid item shall be included in the item mobilization.

901-1.2 Field Office

The cost of mobilization shall include renting a Class "C" field office, following the requirements listed in SSPWC Section 8-2.3. The office shall include indoor furniture, HVAC, telecommunications, electricity, and necessary equipment for field operations. The rental period for the office shall be 12 months.

901-2 MEASUREMENT AND PAYMENT

Measurement and payment for mobilization shall be at the stipulated lump sum price bid. Mobilization shall be a non-prorated item. All items involved in mobilization must be complete to receive any compensation. Any amount not covered by the stipulated lump sum shall include under the other items listed in the Schedule of Work and Prices.

SECTION 902 - PUBLIC NOTIFICATION

902-1 GENERAL

Prior to beginning work, the Contractor shall deliver notices to each business and resident located on the streets included within this contract. This notice shall give a brief outline of the Work, project schedule, and the Contractor and City contact representatives with phone numbers. Format and content of each notice shall be approved by the Engineer.

The Contractor shall provide hand delivered written notice to each business or residence affected by the Work approximately 72 hours prior to beginning each of the following operations:

1. Prior to the start of the work - notify each business or residence
2. Prior to trenching – notify each business or residence
3. Concrete Repairs – notify affected business or residence
4. Street Closure – notify each business or residence
5. Pavement Repairs/Grind – notify each business or residence
6. Resurfacing – notify each business or residence

Notices as appropriate, shall also be delivered to the residents of adjacent dead end streets affected by the Work.

If work does not occur on the date specified on the notice or if it is known that the work will not occur on the date specified, a new notice shall be delivered to affected residents and businesses, as soon as the delay is known, indicating the revised dates of work. Notices shall at minimum give the start date of the work, daily schedule for the proposed work, typical parking restriction for the work, the times of any restricted driveway access, the Contractor's representative and phone number, along with any other information requested by the Engineer. All notices shall be approved by the Engineer for content and delivery schedule. Sample notices are included herein.

All notices shall be in the format of door hangers (14 inches x 4.5 inches, 110 lb index paper or approved equal) and be hung at the main door of each residence or business affected. When required by the Engineer, the text of such notices shall be printed in English with the reverse in Spanish.

902-2 MEASUREMENT AND PAYMENT

Full compensation for producing and delivering all such notices shall be considered as included in the various items of work and no separate payment shall be made.

SECTION 903 – WASTE DIVERSION

903-1 GENERAL

The City requires that the work shall generate the least amount of waste possible and that processes ensure the generation of as little waste as possible shall be employed. All of the waste materials listed in Section 904-2 shall be salvaged or recycled as indicated. At least 75% of all waste from the project shall be diverted (salvaged or recycled).

903-2 WASTE DIVERSION PLAN

903-2.1 Draft Waste Diversion Plan

The Contractor shall submit to the City a Draft Waste Diversion Plan. The plan shall contain the following:

- Analysis of the proposed jobsite wastes to be generated, including types and quantities.

- Material Estimated Tons Estimated % of Total Waste Generated
- Scrap wood
- Brush/trees/vegetation
- Treated Wood Waste
- Clean dirt
- Concrete
- Cardboard/paper
- Scrap metal (rebar, other)
- Rock
- Salvaged equipment
- Non-recyclable trash

2. The Contractor shall segregate the following materials on-site for diversion to an appropriate recycling facility (detailed below). For additional information about recycling, disposal, and reuse facilities in Ventura County, please visit this Commercial & Demolition Debris Resource Guide. Below is a list of suggested recyclers to utilize for waste diversion:

· Scrap wood/lumber/brush/yard waste materials (no yucca, palm, iceplant, rocks, dirt, or chemical/oil treated wood)
Contact: Agromin Organics – 6859 Arnold Rd., Oxnard
· Treated Wood Waste (wood that has been treated with chemical preservatives)
Contact: Gold Coast Recycling – 5275 Colt Street, Ventura
· Concrete (no rebar)
Contacts: Vulcan Materials - 6029 Vineyard Road, Oxnard
Santa Paula Materials – 1224 E. Santa Clara Street, Santa Paula
· Scrap metal
Contacts: Gold Coast Recycling - 5275 Colt Street, Ventura or Standard Industries - 1905 Lirio Avenue, Ventura
· Cardboard and paper
Contacts: Gold Coast Recycling - 5275 Colt Street, Ventura
· Non-Recyclable trash
The Contractor has the following options to deliver the segregated recyclable materials to the facilities described:

1. The Contractor may haul the segregated materials themselves (using their own equipment) to the locations listed above and provide receipts to the City verifying the weights of materials recycled or;

2. The Contractor may contract with E.J. Harrison and Sons to deliver the materials to the appropriate locations for recycling or;

3. The Contractor may make arrangements with any of the City of Ventura Permitted recyclers to collect the materials for recycling, with receipts provided by the recyclers verifying weights and materials recycled.

The above listed contacts may or may not be able to recycle materials depending on the volume and other considerations. The Contractor is required to seek out other recycling facilities and may work with the Environmental Sustainability Division to identify an alternative solution. It is the Contractor's responsibility to pay any and all fees associated with salvaging or recycling materials generated from the project.

903-2.2 Meetings

The Contractor shall conduct a Construction Waste Management meeting and shall include subcontractors affected by the Waste Management Plan. At a minimum, waste management goals and issues shall be discussed at the preconstruction and regular jobsite meetings.

903-2.3 Separation Facilities

The Contractor shall layout and label a specific area to facilitate separation of materials for potential recycling, salvage, reuse, and return. Recycling and waste bin areas are to be kept clean and clearly marked in order to avoid contamination of materials.

903-2.4 Hazardous Wastes

Hazardous wastes shall be separated, stored, and disposed of according to local regulations.

903-2.5 Report

The Contractor shall submit a report of waste-generated and recycled by the project. The summary shall contain 1) the amount (in tons) of material placed in a landfill, including manifests, weight tickets, receipts, and/or invoices, and 2) for each material recycled, reused, or salvaged, include the amount (in tons or cubic yards), including manifests, weight tickets, receipts, and/or invoices and the receiving party.

903-3 MEASUREMENT AND PAYMENT

Measurement and payment for Waste Diversion will be made at the contract lump sum price bid in the Schedule of Work and Prices in the Proposal. The Contractor shall include any costs above and beyond the amount stipulated in other listed items of the bid and no separate payment will be made thereof.

The contract lump sum price shall include full compensation for furnishing all labor, materials, tools, equipment, transportation, and incidentals to complete waste diversion, including, but not limited to, disposal of all construction debris and excess excavated material, in accordance with the Contract Documents.

No payment will be made if the Contractor does not furnish a report that provides evidence, satisfactory to the Engineer, that waste items have been salvaged and/or recycled as specified herein. If the Contractor does not attain the waste diversion goal of at least 75%, the City will only make

a prorated payment based on the percentage of the goal attained. For example, if the Contractor attains an overall 50% diversion (in tons), the City will pay only 50/75th or 66.67% of the amount stipulated in the bid.

SECTION 904 – VIDEO RECORDING

904-1 GENERAL

A minimum of one week prior to start of construction, the Contractor shall video record all areas where construction is to take place. Such video recordings shall be provided to the Engineer before construction commences. These video recordings shall serve as a record of the existing conditions for disputes arising from restoration, and should therefore be taken along the line of construction and site access and staging areas at sufficient detail as necessary to clearly depict details of existing conditions. Video recordings shall document existing roadway striping and all painted curb markings in the project area. The video recordings shall be standard USB (flash drive). All video recordings shall be indexed and catalogued in such a manner that each photographed area is readily identifiable, and shall also indicate the date and time (hour, minutes and seconds) on which the recording was made. The Contractor shall also video record any unusual conditions encountered during construction that are not already a matter of photographic record. In any areas where existing conditions cannot be determined by means of video recording, the area shall be restored as approved by the Engineer at Contractor's expense. All video recordings shall become the property of the City.

904-2 MEASUREMENT AND PAYMENT

Measurement and payment for video recording shall be included in the stipulated lump sum price for mobilization.

SECTION 905 - TRAFFIC CONTROL

905-1 GENERAL REQUIREMENTS

All work required for maintaining and controlling traffic during the construction period shall conform to the applicable provisions of the SSPWC and these modifications herein. All such work shall additionally conform to the most recent Edition of the California Edition of the Manual on Uniform Traffic Control Devices, hereinafter referred as CMUTCD, issued by the State of California, Department of Transportation (Caltrans).

All construction work and traffic control shall be scheduled and constructed to provide for a minimum of inconvenience and a maximum of safety to the public vehicular, bicycle and pedestrian traffic.

The Contractor shall be responsible for the protection of vehicular traffic, bicycle and pedestrian path of travel, and ADA access until the work called for in the Plans, the Standard Specifications, and these Special Provisions have been accepted by the Engineer.

The Contractor shall notify the Engineer of intent to begin work at least five working days before work is to begin. The Contractor shall cooperate with the Engineer relative to handling traffic through the area and shall make all arrangements relative to keeping the working area clear of parked vehicles.

Contractor's equipment and personal vehicles of the Contractor's employees shall not be parked on the traveled way nor in any traffic control zone.

During any period when two-way traffic is not provided, as approved by the City, the Contractor shall employ flaggers to control traffic through the construction zone.

Trenches shall be covered and traffic control signs removed at the end of each working day, unless otherwise shown on the traffic control plan.

The Contractor shall notify the Engineer of any operation that may affect two-way flow of traffic in excess of five minutes for every half hour of working time, at least two working days in advance of such operation, and receive approval from the City prior to beginning operation.

905-2 CONSTRUCTION SIGNING

Barricades and warning devices shall be provided by the Contractor to delineate the edge of transversable road and shall conform to the CMUTCD. Barricades shall be installed around all open traffic areas when no work is in progress.

Advance warning signs shall be provided with orange warning flags in advance of temporary stop signs. Temporary stop signs are required any time a traffic signal is dark. Temporary stop signs shall be mounted at 7 feet high.

The Contractor shall post standard "NO STOPPING" construction zone signs 72 hours prior to construction, not more than 50 feet apart within the work area, showing the date and time of construction. A shorter notification period may be required (i.e. 24 hours notice only) if directed in writing by the City Engineer.

905-3 ACCESS

Access to street intersections, public and private parking lots, commercial businesses, residences, and other public and private properties shall be maintained at all times. At least 72 hours in advance of starting any work that may affect the access to private properties, the Contractor shall provide written notice to such property owners. Vehicular access to and from commercial and residential driveways and parking lots shall be maintained at all times, except when performing items of work which cannot be accomplished without access restriction.

When access must be restricted, as determined by the Engineer, it shall occur only for the time period required to accomplish the particular item of work.

905-4 RESTRICTIONS ON CLOSURE OF TRAFFIC LANES

(Note to Engineers: Check with traffic to determine whether these times should change depending on the size of the project.)
A. All traffic lanes shall be open for public use on the days and at the time specified below:
1. Saturdays, Sundays and legal holidays: from 12:01 a.m. to 11:59 p.m.
2. Fridays and any day preceding a legal holiday: from 3:00 p.m. to 11:59 p.m.
3. All days not covered in 1 and 2 above:
7:00 a.m. to 9:00 a.m. and
4:00 p.m. to 6:00 p.m.
4. To provide for the orderly and safe movement of traffic during the winter holiday season, construction that restricts the flow of traffic is prohibited on the following public streets between, and including, Thanksgiving Day and New Year's Day:
a. Mills Rd. - Main St. to Telegraph Rd.
b. Main St. - Telephone Rd. to Olive St.
c. Telephone Rd. - Market St. to Portola Rd.
d. California St. - Poli St. to Harbor Blvd.
e. Victoria Ave. - Telegraph Rd. to Valentine Rd.
f. Telegraph Rd. - Main St. to Mills Rd.
5. Construction will only be allowed between the hours of 10 p.m. and 6 a.m. on the following streets:
a. Mills Rd. - Main St. to Telegraph Rd.
b. Main St. - Telephone Rd. to Olive St.
c. Telephone Rd. - Market St. to Portola Rd.
d. California St. - Poli St. to Harbor Blvd.
e. Victoria Ave. - Telegraph Rd. to Valentine Rd.
f. Telegraph Rd. - Main St. to Mills Rd.
6. Non-construction hours: all hours when the Contractor's employees are not physically present at the construction site actively performing contract work.
7. In the vicinity of any Elementary, Middle, or High School, the Contractor shall determine arrival and departure times of said school and shall provide for adequate traffic control for any school age pedestrian and/or bicycle routes to the school during the arrival and departure periods. The submittal of traffic control plans shall include arrival and departure times for each school. At no time will traffic control be allowed in the immediate vicinity so as to cause a hazard to a school pedestrian crosswalk during arrival and departure time periods.
8. Repaving projects on City designated local/residential roadways, except on roadways adjacent to a school, may be completely closed with proper notification to residents, as directed by the Engineer. The roadway shall

not be closed off until 8:00 a.m. and shall be reopened no later than 4:00 p.m. The Contractor shall accommodate residents during closures.
B. On those days and hours when closure of traffic lanes is not prohibited under the provisions of the preceding subparagraph A,
no more than one lane may be closed at any time during construction hours. During any lane closure, type II flashing arrow boards shall be used in accordance with the CMUTCD on all streets with posted speeds of 35 MPH or higher.
C. Traffic signals shall not be placed in flash operation during the hours that traffic lanes shall be kept open as defined in Paragraph A. Under no circumstances shall traffic signals be placed under flash operation without prior approval from the City. Traffic signals will only be placed on flash operation by City personnel. Contractor shall coordinate with the Engineer at least 2 working days in advance for signal service.

905-5 TEMPORARY GUIDE MARKERS

Temporary guide markers shall be either portable delineators or fluorescent traffic cones and shall conform to these Special Provisions. Only one type of temporary guide marker shall be used at any one time. Temporary guide markers shall be placed at all locations shown on the traffic control plans and at such locations as directed by the Engineer. Temporary guide markers shall be left in place at their designated locations; maintained, repaired and replaced as required until their removal is approved by the Engineer.
If the temporary guide markers are damaged, or are not in an upright position, for any reason, said markers shall immediately be replaced, or restored to their original locations in an upright position, by the Contractor, 24 hours per day, 7 days per week for as long as required by the City.

905-6 PORTABLE DELINEATORS

Portable delineators shall conform to Section 12-3.04 of the State Standard Specifications and the CMUTCD.
The portable delineators shall be spaced as necessary for proper delineation; however, in no case shall the spacing between portable delineators exceed 25 feet on tangents or 10 feet on curves.

905-7 FLUORESCENT TRAFFIC CONES

Fluorescent traffic cones shall be new or reconditioned, and of good commercial quality flexible material suitable for the purpose intended. The outer section of the portion above the base of the cone shall be a highly pigmented fluorescent orange polyvinyl compound. The overall height of the cone shall be at least 28 inches. The base shall be of sufficient weight and size or shall be anchored in a manner such that the traffic cone will remain in an upright position.

The fluorescent traffic cones shall be spaced as necessary for proper delineation; however, in no case shall the spacing between fluorescent traffic cones exceed 25 feet on tangents or 10 feet on curves.

905-8 STRIPING

Temporary striping and marking for traffic control shall conform to Section 314 – Traffic Stripping, Curb and Pavement Markings, and Pavement Markers of the SSPWC, except that flexible, reflective Temporary Raised Pavement Markers (TRPM), as manufactured by Davidson Plastics Company, or approved equal, may be used in lieu of paint or pavement tape. Any striping and marking which has no further use shall be completely removed by wet sandblasting, and all sand used in sandblasting shall be removed without delay as the sandblasting operation progresses. All sandblasted asphalt pavement shall be sealed with an asphalt emulsion (SS 1H emulsified asphalt).

905-9 EMERGENCY RESPONSE BY CITY FORCES

If the Contractor fails to maintain and control traffic at any time during the construction period such that the safety to public vehicular, bicycle and/or pedestrian traffic is compromised in any way in the opinion of the Engineer or the City Police Department, the City will require the Contractor to stop work and open all traffic lanes, or immediately modify the traffic control plan, subject to approval by the City, to ensure that the unsafe situation is corrected. If, due to the nature of the work, it is impossible to open all traffic lanes, or the Contractor is unable to immediately modify the traffic control plan to restore safe and adequate traffic control, the City may mobilize emergency forces to re-establish adequate and safe traffic control. The emergency forces may include Police Department, Maintenance Services Division, Engineering Division, contractors or consultants hired by the City or other personnel as required to re-establish adequate and safe traffic control.

The Contractor shall pay for the full and complete time and material cost for any emergency response by City forces and firms hired by the City as described herein. This payment shall be in addition to the liquidated damages provided for in Section 6-9.2 of these specifications. Contractor agrees to pay such costs as provided for in this paragraph, and in case the same are not paid, Contractor agrees that City may deduct the amount of such costs from any money that is due or that may be due the Contractor under the contract. The Contractor shall not be entitled to any delay claims for worked stopped by the City in order to correct an unsafe traffic condition, regardless of whether or not traffic control was set up in accordance with an approved traffic control plan.

905-10 TRAFFIC_CONTROL_PLAN

Prior to commencing construction, the Contractor shall submit a detailed Traffic Control Plan for approval by the City. City will attempt to respond

to any submittal or resubmittal within three working days. The Contractor shall not commence work prior to receiving an approved Traffic Control Plan. Any delay in acquiring Traffic Control Plan approval will be at the Contractor's expense and no additional working days will be granted.

The Traffic Control Plan shall be prepared by a qualified professional and shall conform to the most recent edition of the MUTCD and the California Supplement to the MUTCD and the plan shall cover signing, flagging, detour geometrics, delineation and channelization, barriers and barricades, separation of opposing traffic streams, and hours of flash operation at signalized intersections. The traffic control plan shall be prepared in accordance with section 601-2, Traffic Control Plan (TCP), of the SSPWC.

905-11 MEASUREMENT AND PAYMENT

Measurement and payment for traffic control will be made at the contract lump sum price. The above contract price shall include full compensation for furnishing all labor, materials, tools, equipment, transportation, and incidental for traffic control, in accordance with the Contract Documents.

SECTION 906 - STORMWATER POLLUTION PREVENTION PLAN

906-1 SCOPE

This item shall consist of preparation, management, implementation, maintenance, inspection and compliance with a Stormwater Pollution Prevention Plan (SWPPP) for the project. All construction activities shall comply with the requirements of the "*State Water Resources Control Board NPDES NO. CAS000002General Permit for Storm Water Discharge Associated within Construction and Land Disturbance Activites*". Contractor shall also comply with the requirements of the City of Ventura Municipal Code Chapter 8.600 Stormwater Quality Management, National Pollutant Discharge Elimination System (NPDES) Permit No. CAS004004 Regional Phase I MS4 Permit for Coastal Watersheds of Los Angeles and Ventura Counties, and all other applicable NPDES permits issued by the Los Angeles Regional Water Quality Control Board and the State Water Resources Control Board.

Contractor shall retain and provide qualified stormwater staff for the duration of the project including services of a Qualified SWPPP Developer (QSD) and Qualified SWPPP Practitioner (QSP) having active and current certification who will be responsible to perform all required inspections, prepare required documentation and timely reporting as delegates of the discharger's Legally Responsible Person (LRP) in accordance with requirements of the applicable NPDES General Permit. Data entry for the Storm Water Multiple Applications and Report Tracking System (SMARTS) will be completed by the Contractor.

906-2 SWPPP PREPARATION

Prior to commencing construction, a Contractor shall submit to the Engineer a completed SWPPP, Risk Assessment, and NOI (Notice of Intent) package signed and certified by a Qualified SWPPP Developer (QSD). The SWPPP shall utilize, at a minimum, the CASQA 2024 Construction BMP Handbook, "*Caltrans SWPPP/WPCP Preparation Manual*" (dated October 2016) and the "*Caltrans Construction Site Best Management Practices Manual*" (dated March 2024 or latest). A SWPPP template is available in the CASQA 2024 Construction BMP Handbook or Caltrans SWPPP Template May 2025 (ACCDB; MS Access)

The Best Management Practices (BMPs) selected and implemented shall include those appropriate for both wet and dry weather conditions, all construction phases and environmental conditions.

Post construction plan documentation required for the NOI and SMARTS project entry will be furnished or separately entered by City staff to complete the NOI.

906-3 STORMWATER POLLUTION PREVENTION MEASURES

All stormwater pollution prevention measures shall be in accordance with the submitted SWPPP, the City of Ventura Municipal Code and at all times include an effective combination of BMPs to prevent erosion and sediment loss as well as discharge of construction waste(s) offsite. In the event circumstances during the course of construction require changes to the original SWPPP, a revised plan shall be promptly submitted to the City's representative in each instance, and the SWPPP shall be amended in accordance with the SWPPP and the applicable NPDES General Permit. The SWPPP, including amendments, shall be kept on site at all times.

No responsibility shall accrue to the City as a result of the plan or as a result of knowledge of the plan. All work installed by the Contractor in connection with the SWPPP but not specified to become a permanent part of the project shall be removed and the site restored in so far as practical to its original condition prior to completion of construction or when directed by the City's representative.

All sediment and erosion control BMPs shall be installed onsite before work commences, which includes all demolition activities. Failure to install and maintain effective BMPs throughout the duration of the project will result in withholding payment and/or suspending all work on the project until effective BMPs are implemented. Any penalties assessed to the City by regulatory agencies due to the Contractor's inability to meet stormwater pollution prevention requirements will be deducted from payments made under the contract.

906-4 MEASUREMENT AND PAYMENT

Measurement and payment for Stormwater Pollution Prevention Measures, as described herein, will be made at the contract lump sum price stated in the proposal. Such payment will be considered full

compensation for all labor, materials, tools, and equipment for completion, and implementation and compliance with the SWPPP.

SECTION 907 – DEMOLITION

907-1 SCOPE

The scope of work for demolition operations shall include all labor, materials, equipment, incidentals, and for completing all demolition operations, as shown on the plans and as specified in these special provisions.

The Contractor shall accept the premises as found and clear the site as specified. The Owner assumes no responsibility for the condition of site upon mobilization by contractor, at which time the Contractor will assume risk regarding damage or loss, whether by reason of fire, theft, or other casualty or happening to site. Attention is directed to Solid Waste Management requirements described elsewhere in the contract documents.

907-2 SUBMITTALS

A. Mark, identify and list items to be salvaged for reuse and disposal in compliance with Section 903-2.

907-3 QUALITY ASSURANCE

Comply with Solid Waste Management requirements of the responsible local agency.

907-4 METHODS

Except for materials indicated to remain on the City's property, cleared materials shall become Contractor's property and shall be removed from the project site. This work shall consist of furnishing labor, equipment, tools, materials, and performing all of the work necessary to complete the removal and disposal process, in conformance with these specifications, City project manager, and the City of Ventura Public Works. The parking lot and adjacent walkways shall be left with a neat and finished appearance.

The Contractor shall ensure that all existing utilities remain in service and shall protect them against damage during demolition operations.

The Contractor shall provide barricades, coverings, or other types of protection to prevent damage to existing improvements indicated to remain in place.

Reinforcing or other steel may be encountered in portions of concrete to be removed. No additional compensation shall be allowed for the removal of concrete containing reinforcing or other steel.

The Contractor shall remove all rocks greater than 6 inches in any direction that require removal for construction of the proposed improvements.

The Contractor shall remove and dispose of all trash, drainage devices, terrace drain, down drain, CSP, and rip-rap within the above limits.

All salvageable equipment shall be delivered to the City Parks Division, located at 336 Sanjon Road.

907-4.1 Sawcut and Remove Asphalt Pavement

Existing on-site asphalt pavement shall be removed to the limits shown on the plans. Sawcutting operations shall be performed to neat, straight lines to the limits shown on the Plans and shall conform to Section 300-1.3.1 of the SSPWC. Existing base materials may remain in place or be used as fill on-site.

907-4.2 Remove Retaining Wall

Existing block retaining walls shall be removed to the limits shown on the plans. Removal shall include all footings along the fence with plants. Existing base materials may remain in place or be used as fill on-site.

907-5 MEASUREMENT AND PAYMENT

Measurement and payment of Demolition shall be made in a lump sum listed on the Schedule of Work and Price. All items involved in demolition must be completed to receive any compensation. The lump sum price bid of demolition shall include all labor, materials, tools, and incidentals required to complete demolition in accordance with the contract documents.

SECTION 908 - EARTHWORK

908-1 SCOPE OF WORK

Work under this section shall consist of performing all excavation, Including an over-excavation around the building footprints and excavation of the pavement area following the soil report written by Earth Systems Pacific on December 16, 2024. All work must comply with the relevant provisions of the Standard Specifications for Public Works Construction (SSPWC), including:

- Subsection 300-2 “ Unclassified Excavation”,
- Subsection 300-3 “Structure Excavation and Backfill”
- Subsection 300-4 “Unclassified Fill”
- Subsection 300-10” Geotextiles For Separation” ,
- Subsection 301-1" Subgrade Preparation"

908-2 DEWATERING

The Contractor must adhere to **Section 911 Trench Safety**, **Section 906 Storm Water Pollution Prevention Plan (SWPPP)** and **Section 909 Control of Groundwater** regarding over-excavation and dewatering activities. The over-excavation will alter the groundwater table as mentioned in soil report. The groundwater discharge process must comply with the Regional Dewatering Permit issued by the Los Angeles Regional Water Board, which requires treating the water before it is discharged into the on-site storm drainage system.

908-3 UNCLASSFIED EXCAVATION

Work under this Section shall conform to SSPWC, Section 300-2, Unclassified Excavation, and these modifications:

1. The foundation footprints shall be overexcavated a depth of 7 feet below the existing surface per range shown on Sheet 7 of Drawing No. 2025-d-010. The excavation shall extend laterally to a distance of 10 feet beyond the selected perimeter. The total perimeter shall sacrificed additional 6 inches surface being moisturized and recompacted.
2. Contractor should verify the water level has been lowered at least 3 feet below the excavated depth follow the page of soil report.
3. The excavation over 4-foot should be sloped back above the 4-foot vertical cut to at least 1.5H:V or flatter to provide the adjacent ground not subject to surcharge loading.

908-4 UNCLASSFIED FILL

Work under this Section shall conform to SSPWC, Section 300-4, Unclassified Excavation, and these modifications:

1. Excavation around the building footprint shall follow Section 908-5 to place the geotextile at the bottom of the over-excavation with a parameter of 10 feet extension from the building footprint as the sidewall.

908-5 Geotextile for Separation

The over-excavated area around the building footprint shall be covered with Reinforced Geogrid, specifically Tensar InterAx NX850 or an equivalent brand as specified in the Soil Report on page 17 comply with Section 300-10 of SSPWC:

- The first layer of geogrid will be installed beneath a layer of 1-inch minus aggregate base, with a total depth of 1 foot. This should be compacted to 95% according to ASTM D1557 for dry density.
- A second layer of geogrid will be placed on top of this aggregate base. An additional 1-foot layer of aggregate base will be added above the second geogrid layer with the compaction of 95% dry density.
- The extended portion of the bottom geogrid will be folded back from the sidewall to create an 8-foot overlap above the 1-foot layer of 95% compacted aggregate base on the second geogrid layer. The remaining soil layer must also achieve 95% compaction in accordance with ASTM D1557 for dry density.

908-6 SUBGRADE PREPARATION

The refilled surface requires additional material to elevate the site by up to 4 feet, as shown in the grading plan on Sheet 7 of Drawing 2025-D-010. The fills must meet Section 301-1 standards for treatment and compaction as the subgrade of the concrete pavement and sidewalk. The 4-foot fill will raise the west side of the property. Hence, a compacted slope along the

construction border is necessary, as outlined in the grading details on Sheet 6, in accordance with Sections 300-4.7 and 300-4.8.

908-7 STRUCTURAL EXCAVATION AND BACKFILL

The building footprints feature two types of foundations: a mat slab foundation for the Apparatus Bay and an exterior slab on grade for the gym and interim office. Each foundation shall comply with Subsection 908-5 to build upon the prepared subgrade with additional requirements outlined in Section 300-3. The contractor should refer to the structural plan on Sheet 21-31 of Drawing 2025-D-010 to ensure that the foundation requirements for each building are met.

908-8 DETENTION BIOSWALE

A bioswale on the south side will be excavated and filled following the guidelines shown on Sheet 12 of Drawing No. 2025-D-010. An impermeable geotextile will be placed at the bottom of the bioswale trench following the details of Subsection 300-10.

908-9 MEASUREMENT AND PAYMENT

Measurement and payment for **Earthwork** will be divided into various items as outlined in each subsection with the unit price per cubic yard specified in the Schedule of Work and Price. The above contract unit price shall include full compensation for furnishing all labor, materials, tools, equipment, transportation, and incidentals for unclassified excavation in accordance with the Contract Documents.

SECTION 909 – CONTROL OF GROUNDWATER

909-1 GENERAL

This section shall consist of dewatering and removal of all groundwater: Groundwater shall be removed in accordance with the Best Management Practice (BMP) “BMP NS-2, Dewatering Operations”, in the California Stormwater BMP Handbook. Groundwater may be discharged to the public storm drain system after desilting. Desilting method shall conform to NS-2.

Discharged groundwater shall be tested daily for conformance with the table of Numeric Action Levels (NAL). Results shall be maintained in the *Pollution Prevention Plan*. If NALs are exceeded, immediately notify the City. Corrective measures will be implemented immediately following identification of the discharge. Discharges and corrective actions must be documented in the *Pollution Prevention Plan* and include the following items:

1. The date, time, location, nature of operation and type of unauthorized discharge.
2. The control measures (BMPs) deployed before the discharge event.

3. The date of deployment and type of control measures (BMPs) deployed after the discharge event, including additional measures installed or planned to reduce or prevent re-occurrence.

Numeric Action Level (NAL)

Parameter	Unit	Numeric Action Level Daily Average
pH	pH units	Lower NAL = 6.5 Upper NAL = 8.5
Turbidity	NTU (Nephelometric Turbidity Unit)	250 NTU

Contractor shall be responsible for preventing irrigation and stormwater runoff from entering open excavations in accordance with the Stormwater Pollution Control Plan and the General NPDES permit. This work shall be considered included in the Line Item bid for Stormwater Pollution Control Measures. No additional compensation will be made for trench dewatering of stormwater or irrigation runoff.

Groundwater and seepage may be encountered during construction. All work for diversion, control and removal of water proposed by the Contractor shall be approved by the Engineer. These items shall be in place and in good working condition at all times during the course of the project. See Appendix E for soils report and ground water conditions.

All water encountered in the jobsite shall be disposed by the Contractor in such a manner as shall not damage public or private property or create a nuisance or health menace.

Work in this section shall also conform to SSPWC Section 7-8.6.4., however, for the exception that no groundwater discharges will be allowed to be made to the storm drain system.

Due to the unknown nature of the groundwater conditions, the number of days where dewatering will be required may be increased or decreased as determined by the Engineer. Therefore, SSPWC section 3-2.2.2 and 3-2.2.3 do not apply to work performed under this section.

909-2 CONSTRUCTION METHODS

All excavations shall be kept free from water. Any presence of groundwater shall require dewatering operations. The Contractor shall furnish, install, maintain, and operate all necessary pumping and other equipment for dewatering all excavations. The Contractor shall ensure that there is sufficient pumping equipment for immediate use on the project at all times, including standby pumps for use in case other pumps become inoperable. Groundwater should be drawn down to at least 1-foot below the base of the excavation and should result in excavation sidewalls free of

groundwater seepage. Dispose of water in such a manner as to cause no injury or nuisance to public or private property, or be a menace to the public health. The dewatering operation shall be continuous; so that the excavated areas shall be kept free from water during construction and until backfill has been placed to a sufficient height to anchor the work against possible flotation.

The Contractor shall continue dewatering during backfilling operations such that the groundwater is at least 1 foot below the level of the compaction effort at all times. No compaction of saturated materials shall be allowed.

The Contractor shall be responsible for any damage to the foundations or any other parts of existing structures or of the new work caused by failure of any part of the Contractor's protective works. After temporary protective works are no longer needed for dewatering purposes, the Contractor shall remove all materials and equipment used from dewatering operations.

If pumping is required on a 24-hour basis, requiring engine drives, then engines shall be equipped in a manner to keep noise to a minimum and which complies with the requirements specified in the City's Noise Ordinance, Article 6 - Noise Control, Section 6260. The Contractor shall be responsible for maintaining noise levels of the entire construction site within limits set. This noise level requirement shall apply to all equipment on the job or related to the job, including but not limited to, trucks, transit mixers or transient equipment that may or may not be owned by the Contractor. The use of load signals shall be avoided in favor of light warnings except those required by safety laws for the protection of personnel.

909-3 MEASUREMENT AND PAYMENT

Measurement and payment for **Control of Groundwater** shall be made at the contract lump sum price. The above contract unit price shall include full compensation for furnishing all labor, materials, tools, equipment, transportation, and incidentals for construction in accordance with the Contract Documents.

SECTION 910 - COMPACTION TESTS

910-1 GENERAL SCOPE

The Engineer will have tests performed to ensure the unclassified fill and structural backfill comply with the specifications. These tests will be performed at no cost to the Contractor, except that the Contractor shall reimburse the City for any retesting necessary because the material or work did not comply with the specifications on the first tests.

910-2 LABORATORY MAXIMUM DENSITY

Subsection 211-1, Compaction Tests, of SSPWC shall be deleted and replaced by the following:

Method 1 - Laboratory maximum density of soil shall be determined by ASTM D-1557.
Method 2 - Laboratory maximum density of base and sub-base materials shall be determined by Test Method No. Calif. 216, Method A.

910-3 FIELD DENSITY

Field density of soil shall be determined by ASTM D-1556, sand cone method, or by ASTM D-2922, nuclear method.

910-4 RELATIVE COMPACTION

The words "relative compaction" or "relative density" shall mean the ratio of the field density to the laboratory maximum density expressed in percent.

910-5 MEASUREMENT AND PAYMENT

Full compensation for **Compaction Tests** shall be included in the various items of Schedule of Work and Prices, and no separate payment shall be made.

SECTION 911 – TRENCH SAFETY

911-1 SCOPE

The following shall entirely replace the second paragraph of Subsection 5-7.2, Safety Orders, of SSPWC. Before beginning excavation for a trench five feet or more in depth, the Contractor shall submit to and shall receive the acceptance (approval) of the Engineer of a detailed plan showing the design of shoring, bracing, sloping, or other provisions to be made for worker protection from the hazard of caving ground. Such plan shall be submitted at least five days before the Contractor intends to begin work on the trench. If such plan varies from the shoring system standards established by the Construction Safety Orders, the plan shall be prepared by a registered civil or structural engineer. Nothing herein shall be deemed to allow the use of shoring, sloping, or protective system less effective than that required by the Construction Safety Orders of the Division of Industrial Safety. No excavation shall start until the Engineer has accepted the Contractor's shoring plan and Contractor has obtained a permit from State Division of Industrial Safety and given a copy of the permit to Engineer.

911-2 SHORING

The following subsection shall be added to Subsection 5-7.2, Safety Orders, or SSPWC. The Contractor shall provide and install adequate sheeting, shoring, and bracing, or equivalent method for the protection of life or limb, which shall conform to the applicable safety orders, and Sections 5-7.2 when applicable. Nothing in these specifications shall be construed as imposing tort liability on the City or any of its employees.

911-3 MEASUREMENT AND PAYMENT

Measurement and payment of **Trench Safety** shall only be considered as safety measure for the trench deeper than 5 feet. Full compensation for this work should be included in the items listed under **Earthwork** listed in the Schedule of Work and Prices.

SECTION 912 – TRENCHING

912-1 SCOPE

The Contractor will install the utility line after the on-site excavation and dewatering are completed. Additional trenching work will be required for the sewer clarifier and utility connections from Alessandro Drive, as shown in Drawing No. 2025-D-010. The Contractor must notify Ventura Water to install the 1-inch water meter and connect the water main from the proposed sidewalk. Restoration of the street trench shall follow the City of San Buenaventura Street Standard Detail 112.

912-2 MEASUREMENT AND PAYMENT

Measurement and payment of **Trenching** shall be included in the various items listed in the Schedule of Work and Price such as **Earthwork** and **Plumbing**. The contract unit price shall include full compensation for all labor, materials, tools, and equipment to completely construct this item of the work, in accordance with the project plans and as specified in the special provisions.

SECTION 913 – SIDEWALK

913-1 SCOPE OF WORK

The Contractor shall demolish the existing curb and construct new sidewalks with an approximate footprint of 5,090 square feet from the Alessandro Drive to the two sides of entrance driveway. The new P.C.C. sidewalk shall follow the City Standard Detail Nos.102 and 104.The Sidewalk and driveways shall be constructed within five (5) working days after removal of sidewalks and driveway per segment. Clearing and grubbing shall be in accordance with Subsection 300-1, including removal and disposal of materials.

All concrete surfaces, joints and edges shall be neatly finished in accordance with Subsection 303-5, using proper finishing tools and techniques. Finished surfaces shall match the finish and color of adjacent concrete. The Contractor shall be responsible protecting newly constructed concrete improvements from damage. Contractor shall remove and replace all concrete damaged prior to acceptance. Concrete shall be replaced score line to score line. Patching damaged concrete is not allowed.

The Contractor shall contact the City's Parks Division a minimum of 24 hours prior to performing any excavations within a 25-foot radius of a street tree. Any damage to the street tree may result in tree replacement

by Contractor or payment of replacement costs by Contractor based on the value of the damaged tree.

913-2 MEASUREMENT AND PAYMENT

Measurement and payment for **Sidewalk** will be made at the contract unit price per square feet. The above contract unit price shall include full compensation for furnishing all labor, materials, tools, equipment, transportation, and incidentals for sidewalk construction including base material and removal of existing concrete, base material, sand and subgrade in accordance with the Contract Document.

SECTION 914 – CURB RAMP, CROSS GUTTER AND SPANDREL

914-1 SCOPE OF WORK

The Contractor shall construct curb ramps, cross gutters and spandrel at locations designated on the Sheet 6 of Drawing No.2025-D-010. The ramps shall conform to Caltrans, SPPWC Standard Details, and construction details identified on the Plans and Specifications. All concrete curb ramps shall have a minimum concrete thickness of four inches over the 4-inches of processed miscellaneous base (PMB) and supersedes Caltrans Standard Details. Curb ramp construction shall not commence until temporary pedestrian access ramps have been installed and a route delineated, as specified in Section 905 Traffic Control. All concrete shall be Concrete Class 560-C-3250 per Table 201-1.1.2 of the SSPWC. The area between the saw cut and the lip of the gutter shall be paved with a minimum of two lifts of 4-inch asphalt concrete. The subgrade must be scarified and recompacted to 90% relative compaction, and the asphalt concrete must be compacted to 95% relative compaction.

All curb ramps, curb and gutter, and sidewalk shall not be left unfished over the weekend and shall be completed and accessible by 4:00 PM on Friday and throughout the weekend. Performing demolition of existing improvements early in the week is advised. Clearing and grubbing shall be in accordance with Subsection 300-1, including removal and disposal of materials.

All concrete used shall be 560-C-3250 per table 201-1.1.2 A of the SSPWC and supersedes City, Caltrans, and SPPWC Standard Details.

Concrete spandrels and cross gutter shall be constructed per SPPWC Standard Detail No. 122-2. All concrete shall be Concrete Class 560-C-3250 per Table 201-1.1.2 of the SSPWC. Where new spandrels join existing cross gutter and curb ramp, dowel and epoxy #4 bars at 12” on center, with a 6” embedment into existing cross gutter and curb ramp. Slot pave the section between the sawcut and lip of gutter with a minimum of two 4-inch lifts of asphalt concrete. Compact subgrade to 90% relative compaction and compact asphalt concrete to 95% relative compaction. Crack control joints shall isolate access ramps from curb and gutter.

All concrete surfaces, joints and edges shall be neatly finished in accordance with Subsection 303-5, using proper finishing tools and techniques. Finished surfaces shall match the finish and color of adjacent concrete. Asphalt concrete for slot paving sections shall be a minimum of 8-inches of Type B-PG 64-10, in accordance with Subsection 203-6 of the SSPWC and shall be placed in two equal 4-inch lifts compacted to 95% relative compaction using mechanical compacting equipment as specified in Subsections 302.5.5 and 302.5.6 of the SSPWC. The subgrade shall be scarified 6-inches and recompacted to 90% relative compaction. Base material for reconstructed sections shall conform to Subsection 2002.5 of the SSPWC and shall be compacted to 95% relative compaction using mechanical compacting equipment.

914-2 CAST IN PLACE DETECTABLE/TACTILE WARNING SURFACES

Curb ramp detectable warning tiles shall consist of raised truncated domes installed on curb ramps in conformance with the City of Ventura Standard Construction Details shown on the plans and these special provisions. Truncated dome material shall be Armor-Tile Tactile Systems, Yellow Detectable Warning Tiles, or equivalent by a single manufacturer of Cast In Place Detectable/Tactile Warning Surface Tiles, cast-in-place, and installed per manufacturer's recommendation. All material submittals must be submitted and approved by the Engineer prior to commencement of construction. The finished surfaces of the detectable warning tiles shall be free from blemishes. Panels may have embedded frames with replaceable surfaces or non-removable surfaces. Prior to constructing all cast-in-place detectable warning tiles, the Contractor shall demonstrate the ability to produce a detectable warning tile conforming to the details shown on the plans and these special provisions by constructing a 36" x 48" test panel at one of the access ramp locations. The manufacturer shall provide a written and signed 5-year warranty equal to or exceeding the remedies by Armor-Tile Tactile Systems for prefabricated detectable warning tiles (see appendix), guaranteeing replacement when there are defects in workmanship and material including deterioration, breakage and delimitation. The warranty period shall begin upon acceptance of the contract. A signed warranty shall be provided to the City prior to final progress payment and release of retention.

914-3 SUBMITTALS

Contractor shall submit manufacturer's literature describing products, installation procedures and routine maintenance. Contractor shall submit two (2) tile samples minimum 6" x 6" of the kind proposed for use. Contractor shall provide shop drawings for products specified showing fabrication details, composite structural system, tile surface profile, sound on cane contract amplification feature, plans of tile placement including joints, and material to be used as well as outlining installation materials and procedure. A complete test report shall be submitted by the Contractor from a qualified accredited independent testing laboratory that

qualifies the materials used for the proposed product is in compliance with requirements and meet or exceed the test specified below.

914-4 QUALITY ASSURANCE

Installer shall be an experienced installer certified in writing by Cast In Place Detectable/Tactile Warning Surface Tile manufacturer as qualified for installation, who has successfully completed installations similar in material, design, and extent to that indicated for project. Contractor shall employ a CASp quality control inspector/evaluator to ensure project curb ramps are compliant with the latest accessibility codes. Contactor shall use only approved DSAAC detectable warning products as provided in the California Code of Regulations (CCR) Title 24, Part 2, Section 205 definition of “Detectable Warning.” Cast In-Place Detectable/Tactile Warning Surface Tiles shall be an epoxy polymer composition with an ultraviolet stabilized coating employing aluminum oxide particles in the truncated domes or a homogenous glass and carbon reinforced composite, which is colorfast, and UV stable. The tile shall incorporate an in-line pattern of truncated domes measuring nominal 0.2” height, 0.9” base measured side by side and a center-to-center spacing of 1.67” minimum and 2.35” maximum. For safety, the field area shall consist of a non-slip surface with a minimum of 40 – 90 degrees raised points 0.045” high, per square inch; “Armor-Tile” as manufactured by Engineered Plastics Inc., ADA Solutions or approved equal. Detectable/tactile warning surface tiles shall meet or exceed the following requirements:

Detectable/tactile warning surface tiles shall meet or exceed the following requirements:

1. Water Absorption of Tile when tested by ASTM D 570-98 not to exceed 0.07%
2. Slip resistance of tile when tested by ASTM C 1028-96 the combined wet and dry static co-efficient of friction not to be less than 0.80 on top of domes and field area when wet.
3. Compressive strength of tile when tested by ASTM D 695-02a not to be less than 28,000 psi.
4. Tensile strength of tile when tested by ASTM D 638-03 not to be less than 11,000 psi.
5. Flexural strength of tile when tested by ASTM D 790-03 not to be less than 25,000 psi.
6. Chemical stain resistance of tile when tested by ASTM D 543-95 (re-approved 2001) to withstand without discoloration or staining –10% hydrochloric acid, urine, saturated calcium chloride, black stamp pad ink, chewing gum, red aerosol paint, 10% ammonium hydroxide, 1% soap solution, turpentine, urea 5%, diesel fuel and motor oil or no deterioration per ASTM 1308.

7. Resistance to wear of unglazed ceramic tile by taber abrasion per ASTM C501-84 (re-approved 2002) shall not be less than 500.
8. Fire resistance of tile when tested to ASTM E 84-05 flame spread shall be less than 20.
9. Accelerated weathering of tile when tested by ASTM G 155 for 2000 hours shall exhibit the following result - DE<5.0, as well as no deterioration, fading or chalking of surface.
10. Salt and spray performance of tile when tested to ASTM B 117-03 not to show any deterioration or other defects after 200 hours of exposure.
11. Accelerated aging and freeze thaw test of tile and adhesive system when tested to ASTM D 1037-99 shall show no evidence of cracking, delamination, warp age, checking, blistering, color change, loosening of tile or other detrimental defects or no disintegration per ASTM 1026.

914-4 SITE CONDITIONS

Maintain minimum temperature of 40 degrees Fahrenheit in spaces to receive Cast in Place Detectable/Tactile Warning Surface Tiles for at least 24 hours prior to installation, during installation, and for not less than 24 hours after installation.

The use of water for work, cleaning or dust control, shall be contained and controlled and shall not be allowed to come into contact with the general public. Provide barricades or screens to protect the general public.

914-5 INSTALLATION PROCEDURE

Installation shall be in strict accordance with manufacturers recommendations. During tile installation procedures, ensure adequate safety guidelines are in place and that they are in accordance with the applicable industry and government standards.

The specifications of the structural adhesives, fasteners, and related materials shall be in strict accordance with the contract documents and the guidelines set by their respective manufacturers.

The physical characteristics of the concrete shall be consistent with the contract specifications while maintaining a slump range of 4 – 7 to permit solid placement of the Cast-In-Place Tile System. An overly wet mix will cause the Cast-In-Place System to float. Under these conditions, suitable weights such as 2 concrete blocks or sandbags (25 lb) shall be placed on each tile.

The concrete pouring and finishing operations require typical mason’s tools, however, a smart level with electronic slope readout, 25 lb. weights, and a large rubber mallet can be used for the installation of the Cast-In-Place System. A vibrating mechanism such as that manufactured by Vibco can be employed, if desired. The vibrating unit should be fixed to a soft base such as wood, at least 1-foot square.

The factory-installed plastic sheeting must remain in place during the entire installation process, to prevent the splashing of concrete onto the finished surface of the tile.

When preparing to set the tile, it is important that no concrete be removed in the area to accept the tile. It is imperative that the installation technique eliminates any air voids under the tile. Holes around the tile perimeter allow air to escape during the installation process. Concrete will flow through the large holes in each vane on the underside of the tile. This will lock the tile solidly into the cured concrete.

The concrete shall be poured and finished true and smooth to the required dimensions and slope prior to the tile placement. Immediately after finishing concrete, the electronic level should be used to check that the required slope is achieved. The tile shall be placed true and square to the curb edge in accordance with the contract drawings. The Cast-In-Place Tiles shall be tamped (or vibrated) into the fresh concrete to ensure that the field level of the tile is flush to the adjacent concrete surface. The contract drawings indicate that the tile field level (base of truncated dome) is flush to adjacent surfaces to permit proper water drainage and eliminate tripping hazards between adjacent finishes. The tolerance for elevation differences between tile and adjacent surface is 1/16”.

Immediately after tile placement, the tile elevation is to be checked to adjacent concrete. The tile elevation and slope should be set consistent with contract drawings to permit water drainage to curb as the design dictates.

While concrete is workable, a 3/8” radius edging tool can be used to

create a finished edge of concrete. A steel trowel can be used to float the concrete around the tile’s perimeter, flush to the field level of tile.

During and after the tile installation and the concrete curing stage, it is imperative that there is no walking, leaning or external forces placed on the tile to rock the tile, causing a void between the underside of tile and concrete.

Following tile placement, review installation tolerances to contract drawings and adjust tile before the concrete sets. Two suitable weights of 25 lb each can be placed on each tile as necessary to ensure solid contact of the underside of tile to concrete.

Following the curing of the concrete, protective plastic wrap is to be removed from the tile face by cutting the plastic with a sharp knife, tight to the concrete/tile interface. If concrete bled under the plastic, a soft wire brush will clean the residue without damage to the tile surface.

Tiles can be cut to custom sizes, or to make a radius, using a continuous rim diamond blade in a circular saw or mini-grinder. Use of a straightedge to guide the cut is advisable where appropriate.

Any sound-attenuating plates on the underside of the tile, which are dislodged during handling or cutting, should be replaced and secured with construction adhesive. The air gap created between these plates and the bottom of the tile is important, in preserving the detect-ability properties of the Armor-Tile System.

914-6.1 MEASUREMENT AND PAYMENT

Measurement and payment for constructing **Access Ramps**, case one or case two, with detectable warning tiles, shall be made at the contract unit price per item listed in the Schedule of Work and Prices.

The above contract unit price shall include full compensation for furnishing all labor, materials, tools, equipment, transportation, and incidentals and for doing all the work involved in constructing access ramps, including detectable warning tile and relocation of conflicting facilities, complete in place in accordance with the Contract Documents and as directed by the Engineer.

914-6.2 MEASUREMENT AND PAYMENT

Measurement and payment for constructing **Cross Gutter and Spandrel**, shall be made at the contract unit price per square feet. The above contract unit price shall include full compensation for furnishing all labor, materials, tools, equipment, transportation, and incidentals and for doing all the work involved in constructing cross gutter and spandrel in accordance with the Contract Document.

SECTION 915- SEWER LINE CONNECTION

915-1 GENERAL SCOPE

The contractor is responsible for constructing 821 linear feet of sewer line that will connect from the street to the modular buildings. Additionally, the contractor will install a sewer clarifier and a truck washdown diversion system. The construction details must adhere to the technical specifications outlined below:

- **Section 220000 Plumbing**
- **Section 221113 Facility Water Sewer And Storm Water Service Piping**
- **Section 221323 Sewer Clarifier**

915-1.2 Polyvinyl Chloride Pipe (PVC)

The material used for construction of gravity sewer collection system shall be new and unused PVC pipe and shall conform to the specifications as set forth in SSPWC Subsection 207-16. All pipes shall conform to ASTM D-3034 and shall have a minimum SDR of 35. Pipe joints shall be elastomeric gasket joints and shall conform to SSPWC Subsection 207-17.3.2.

915-2 METHODS OF INSTALLATION

Installation of the pipe materials on-site shall conform to the project plans, Section 306 of the SSPWC, and ASTM D-2321.The 6-inch sewer lateral that connects to the street sewer main on Alessandro Drive shall conform to City of San Buenaventura Standard Detail Nos. 112 and 113.

915-3 WASHDOWN DIVERSION SYSTEM

The Contractor will build a 1,400 square feet truck washdown area to accommodate the installation of the electrical panel, valve, and drainage system manufactured by Fox Environmental Systems USA, as depicted on Sheet 11 of Drawing 2025-D-010.

915-4 SEWER CLARIFIER

The Contractor shall install a 750-gallon sewer clarifier manufactured by Jensen Percast CL750 or an equivalent model. This installation will take place in the southern part of property, as detailed in Sheets 9-11 of Drawing 2025-D-010. The installation process will require excavation, which is covered under **Section 907 Earthwork** and **Section 910 Trenching**. The tank must be placed on a dewatered and compacted gravel for a depth of layer at least 2 feet deep.

915-5.1 MEASUREMENT AND PAYMENT

Measure and payment of **Sewer Line Connection** shall be made per linear foot listed on the Schedule of Work and Prices. The above contract unit price shall include full compensation for furnishing all labor, materials, tools, equipment, transportation, and incident.

915-5.2 MEASUREMENT AND PAYMENT

Measurement and payment for the **Washdown Diversion System** and **Sewer Clarifier** will be made based on the lump sum price of each subsection and calculated independently.

SECTION 916- WATER SERVICE CONNECTION

916-1 SCOPE OF WORK

The Contractor shall install three water lateral service lines for the designated site: one 1-inch water line for the irrigation only, another 1-inch service for the domestic water service and one 6-inch fire water lateral to supply the modular buildings. Ventura Water shall install two 1-inch meters from Alessandro Drive to provide domestic and irrigation services. Additionally, the Contractor is responsible for the two backflow assemblies and all on-site connections.
In addition, the Contractor must install two backflow assemblies for the domestic water lines, as well as any necessary fittings, valves, thrust blocks, and joints specified on Sheet 8 of Drawing No. 2025-D-010. This installation must comply with the trench backfill requirements outlined in City Standard No. 112, starting from the sidewalk on Alessandro Drive.

916-1.2 Fire Service Connection

The 6-inch fire line service will connect to the existing backflow assembly located at the west side of the entrance driveway. The existing 8-inch water line and two fire hydrants will remain in place. A new fire hydrant will be installed to the east side of the entrance driveway.

The contractor is responsible for performing plumbing work related to the sprinkler installation inside the modular buildings, following the floor plan details specified on Sheet 70 of Drawing No. 2025-D-010. The installation of the fire sprinklers must comply with the following requirements:

- **Section 221313 Wet-Pipe Fire Sprinkler System**

916-1.3 Fire Hydrant Adjust to Grade

Contractor shall install a new fire hydrant which shall include connection to new main water line with approved hydrant tee, gate valve, valve box and cover, and 6" diameter service lateral from gate valve to mechanical joint for service riser. In addition, contractor shall adjust two existing fire hydrants to grade following the City of Ventura Construction Standard Detail 020.
Contractor shall provide a certified flow test for each hydrant installed measuring maximum flow rate, static pressure and dynamic pressure. Test results shall be provided on the hydrant testing form included in the appendix. A separate form shall be provided for each hydrant tested. Contractor performing the hydrant testing shall have a current and valid Plant Operator Grade D1 certification or higher. Proof of certification shall be submitted to the Engineer for record.

916-2 SUBMITTAL AND MATERIAL

Water service connections shall be constructed in accordance with City Standard Construction Detail # 009, modified for the HDPE service lines specified herein.

All service laterals from 1-inch to 6-inch, (copper tubing outside diameter size) shall be made of High-Density Polyethylene Tubing (HDPE,) SDR 9, Driscoplex 5100 Series PE 3408 manufactured by Performance Pipe designed for a pressure class 200. The tubing should have blue colored marking letters or approved equivalent.

All polyethylene tubing furnished under these specifications shall conform to all applicable requirements of the latest revisions for the following standards:

- AWWA C-901: Specification for Polyethylene Pressure Pipe, Tubing and fittings, ½” through 3” for Water
- ASTM D2737: Specification for Polyethylene (PE) Plastic Tubing (Copper tube size; outside diameter)
- ASTM D3350: Specification for Polyethylene Plastics Pipe and Fittings Materials
- National Sanitation Foundation: NSF #14 and #61

- International Association of Plumbing and Mechanical Officials: IAPMO PS-24-69
- Union Plumbing Code: UPC
- Plastic Pipe Institute: PPI
- Plastic Pipe and Fittings Association: PPFA
- Copper Based Fitting ASTM B62

The polyethylene material from which the pipe and tubing are extruded shall meet the requirements of ASTM D3350 having a cell classification of 345564C. The pipe shall be classified as a Type III Grade PE34 high-density polyethylene plastic material. The polyethylene extrusion compound from which the PE pipe and tubing are extruded shall be of virgin quality listed for potable water service by the National Sanitation Foundation (NSF).

916-2.1 Fire Service Line and Sprinkler

The pipe must comply with ASTM A53, Grade A standards and have a wall thickness equivalent to Schedule 40, as specified in ANSI B36.10. The pipe should be provided in lengths that facilitate field cutting for precise installation, with field cuts minimized as much as possible.

All fittings, including elbows, tees and crosses and reducers shall be wrought carbon steel fittings conforming to the material requirements of ASTM A234, Grade WPB, and to the dimensional requirements of ANSI B16.9. Fittings shall have a wall thickness equal to the pipe wall thickness.

Thread-o-lets shall be manufactured of compatible steel material for welding to the specified pipe of size and pipe threads suitable for connecting valves and specialties indicated on the plan.

916-3.1 MEASUREMENT AND PAYMENT

Measurement and payment for **Water Service Connections** will be made at the contract unit price per linear foot listed on Schedule of Work and Prices. The above contract unit price shall include full compensation for furnishing all labor, materials, tools, equipment, transportation, and incidentals for service reconnections in accordance with the Contract Documents.

916-3.2 MEASUREMENT AND PAYMENT

Measurement and payment for **Backflow Assembly, Fire Hydrant** and **Fire Hydrant adjust to Grade** will be made at the contract unit price per item listed on Schedule of Work and Prices. The above contract unit price shall include full compensation for furnishing all labor, materials, tools, equipment, transportation, and incidentals for service reconnections in accordance with the Contract Documents.

916-3.3 MEASUREMENT AND PAYMENT

Measurement and payment for **Fire Service Connections** will be made at the contract unit price per linear foot listed on Schedule of Work and Prices. The above contract unit price shall include full compensation for furnishing all labor, materials, tools, equipment, transportation, and incidentals for service reconnections in accordance with the Contract Documents.

SECTION 917- STORMWATER DRAINAGE

917-1 SCOPE OF WORK

The stormwater drainage pipeline shall be installed to divert onsite runoff into the bioswale or existing drainage structure. The existing two storm drain culverts, and a segment of drainage channel shall be preserved in place as shown on Sheet 9 of Drawing No. 2025-D-010. The Contractor shall install 12" x12" precast concrete catch basins at the lower points, as detailed on Sheet 8.
The storm drain shall be installed with the following standard:

- PVC Pipe - ASTM D-2321

Pipe bedding for PVC storm drain shall be ½-inch crushed rock per Section 200-1.2 of the SSPWC.
Storm drain under the concrete pavement shall be covered by Class A-6 sack mix with 3/4" or 1" aggregate. Concrete mix shall have 1/2 to 3/4 Pound by weight or 1 pint by volume per cubic yard of concrete mix.

917-2.1 MEASUREMENT AND PAYMENT

Measurement and payment for **Stormwater Drainage** will be made at the contract unit price per linear foot listed on the Schedule of Work and Prices. The above contract unit price shall include full compensation for furnishing all labor, materials, tools, equipment, transportation, and incidentals for service reconnections in accordance with the Contract Documents.

917-2.2 MEASUREMENT AND PAYMENT

Measurement and payment for **Catch Basin** will be made at the contract of each item listed on Schedule of Work and Prices. The above contract unit price shall include full compensation for furnishing all labor, materials, tools, equipment, transportation, and incidentals for service reconnections in accordance with the Contract Documents.

SECTION 918- CURB AND GUTTER

918-1 SCOPE OF WORK

Existing curb and gutter along the north and west of the property line shall be removed and replaced with new P.C.C. curb and gutter per City Standard Detail No. 107, type as noted on Sheet 15 of Drawing No. 2025-D-010. In addition, the concrete class shall be 520-C-2500.

918-1.2 Method

Curb and gutter shall be constructed within five (5) working days after removal of sidewalks and driveways in each location. The Contractor shall remove all existing concrete curb and gutter shown on the plans to the nearest control joint. Clearing and grubbing shall be in accordance with Subsection 300-1, including removal and disposal of materials. Clearing and grubbing shall include cutting and removal of interfering tree roots.

All concrete surfaces, joints and edges shall be neatly finished in accordance with Subsection 303-5, using proper finishing tools and techniques. Finished surfaces shall match the finish and color of adjacent concrete.

Base material shall conform to Subsection 200-2.5 of the SSPWC and shall be compacted to 95% relative compaction using mechanical compacting equipment.

918-3 MEASUREMENT AND PAYMENT

Measurement and payment for **Curb and Gutter** construction will be made at the contract unit price per linear foot. The above contract unit price shall include full compensation for furnishing all labor, materials, tools, equipment, transportation, and incidentals for curb and gutter construction including base material and removal of existing curb, gutter, base material and subgrade in accordance with the Contract Documents.

SECTION 919 - COMPACTION TESTS

919-1 COMPACTION AND COMPACTION TESTS

The City Engineer will have tests performed to ensure that all parts of the pavement section and backfill comply with the specifications. These tests will be performed at no cost to the Contractor, except that the Contractor shall reimburse the City for any retesting necessary because the material or work did not comply with the specifications on the first tests.

919-2 LABORATORY MAXIMUM DENSITY

Subsection 211-1, Compaction Tests, of SSPWC shall be deleted and replaced by the following:
Method 1 - Laboratory maximum density of soil shall be determined by ASTM D-1557.
Method 2 - Laboratory maximum density of base and sub-base materials shall be determined by Test Method No. Calif. 216, Method A.

919-3 FIELD DENSITY

Field density of soil shall be determined by ASTM D-1556, sand cone method, or by ASTM D-2922, nuclear method.

919-4 RELATIVE COMPACTION

The words "relative compaction" or "relative density" shall mean the ratio of the field density to the laboratory maximum density expressed in percent.

919-5 MEASUREMENT AND PAYMENT

Full compensation for **Compaction Tests** shall be included in the various items of Schedule of Work and Prices and no separate payment shall be made.

SECTION 920 - CONCRETE MASONRY RETAINING WALL

920-1 SCOPE OF WORK

The retaining wall along the north side shall be replaced with the concrete masonry retaining wall following the detail shown on Drawing No. 2025-D-010 Sheet 8.

920-2 DESIGN

- The class of concrete shall be 560-C-3250 per Section 201-1.1.2 of SSPWC and follow the ASTM C150 Type II/V for a minimum compressive strength of 3000 psi at 28 days.
- All concrete surfaces, joints and edges shall be neatly finished in accordance with Subsection 303-1.9.2 (Ordinary Surface Finish) of the SSPWC.
- The reinforced steel for concrete shall meet ASTM A615 Grade 60.
- Structural excavation and backfill shall be constructed in accordance with Subsection 300-3 of the SSPWC. .
- Mortar shall be ASTM C270 type "S" -1 part cement to 1/2 part lime to 3 parts damp loose sand(1,800 psi at 28 days)
- Concrete Masonry unit shall be C90, Grade A(f'm=1500 psi)
- Grout shall be ASTM 476

Structural excavation and backfill shall be constructed in accordance with Subsection 300-3 of the SSPWC.

920-3 CONCRETE DRAINAGE DITCH

The 12-inch-wide concrete V-ditch shall be constructed along slope side of the retaining wall per detail shown Sheet 8 of Drawing 2025-D-010. The concrete mix shall contain 2lb. per cubic yards of ¾” polypropylene fibers. The class of concrete shall be 520-C-2500 per Section 201-1.1.2 of the SSPWC.

920-4.1 MEASUREMENT AND PAYMENT

Measurement and payment for Concrete Masonry Retaining Wall will be made at the unit price per cubic yard listed on Schedule of Work and Prices. The above unit price shall include full compensation for furnishing all labor, materials, tools, equipment, transportation, and incidentals for structural excavation, scarification, compaction and backfill, wall drainage, constructing concrete forms, and disposal and haul-off of surplus excavated on-site material, and all other material and work necessary to complete the wall in accordance with the Contract Documents.

920-4.2 MEASUREMENT AND PAYMENT

Measurement and payment for concrete V-ditch will be made at the unit price per linear foot listed on Schedule of Work and Prices.

SECTION 921 – CHAIN LINK FENCE

921-1 GENERAL

The chain link fence and gate along the south boundary will be relocated and replaced after the onsite construction is completed. All chain link fencing components shall conform to the provisions within Section 206-6 – Chain Link Fence of the SSPWC.

921-2 SUBMITTALS

Submittals to be in accordance with the requirements of Subsection 3-8 of the SSPWC. Review or acceptance, as specified by the City, is required before commencement of work. The Contractor shall submit product cut sheets and manufacturer's information for all fencing for approval prior to purchase.

921-3 MATERIALS

Materials for posts, rails, and braces shall conform to the manufacturer's recommendations and plans. If a conflict arises between the manufacturer's recommendations and the plans, the manufacturer shall override. At a minimum, the materials not shown otherwise shall conform to Table 206.6.2.

921-4 VINYL COATING

Class 1 or Class 1A shall be vinyl-coated by the manufacturer. All fence materials, including posts and accessories, shall be vinyl-coated (black or).

921-5 INSTALLATION

1. Field Measurements: Verify layout information for fences and gates show on Drawings in relation to the property survey and existing structures. Verify dimensions by field measurements. Adjust layout as directed by the Engineer.

2. Examine areas and conditions, with Installer present, for compliance with requirements for site clearing, earthwork, pavement work, and other conditions affecting performance.

3. Do not begin installation before final grading is completed and layout has been confirmed by the Engineer.

4. Proceed with installation only after unsatisfactory conditions have been corrected.

5. Stake locations of fence lines, gates, and terminal posts. Indicate locations of utilities, lawn sprinkler systems, underground structures, benchmarks, and property monuments.

6. Install fencing to comply with the manufacturer's printed instructions and more stringent requirements specified.

7. Install fencing on indicated lines.

8. Post Excavation: Drill or hand-excavate holes for posts to diameters and spacings indicated in firm, undisturbed or compacted soil.

9. Post Setting: Set all posts in concrete footings. Protect portion of posts aboveground from concrete splatter. Place concrete around posts and vibrate or tap for consolidation. Using mechanical devices to set line posts is not permitted. Verify that posts are set plumb, aligned, and at correct height and spacing, and hold in position during placement and finishing operations until concrete is sufficiently cured.

10. Exposed Concrete Footings: Extend concrete 2 inches (50mm) above grade, smooth, and shape to shed water.

921-6 ADJUSTING AND COMPLETION

1. Gate: Adjust gates to operate smoothly, easily, and quietly, free from binding, warp, excessive deflection, distortion, nonalignment, misplacement, disrupting, or malfunction, throughout entire operational range. Confirm that latches and locks engage accurately and securely without forcing or binding.

2. Properly lubricate operating hardware and other moving parts.

3. Installer shall train City's personnel on procedures and schedules for starting and stopping, troubleshooting, servicing, and maintaining installed systems.

921-7 MEASUREMENT AND PAYMENT

Measurement and payment for Chain Link Fence and Gates will be made at a lump sum price the Schedule of Work and Prices. Measurement will be made lengthwise along chain-link fence and will include gates. There will be no distinction for various fence and gate heights.

The above contract price shall include full compensation for furnishing all labor, materials, tools, equipment, transportation, and incidentals for purchase, delivery and installation of chain-link fencing in accordance with the Contract Documents.

SECTION 922- RIGID CONCRETE PAVEMENT AND DRIVEWAY

922-1 SCOPE OF WORK

The Contractor shall remove the existing 1.49-acre asphalt pavement during the Earthwork phases. Subsequently, a 1.44-acre concrete driveway will be constructed that consists of 8-inch-thick Portland Cement Concrete (Rigid) pavement, as detailed on Sheet 7 of Drawing No. 2025-D-010. The pavement sections must comply with Caltrans HDM Section 621.1, and the subgrade must be prepared according to SSPWC Section 301-1.

922-1.2 CONSTRUCTION

- The PCC Pavement shall be constructed per SSPWC 302-6 using PCC class from SSPWC 301-1.
- All the plane joints shall be placed per SPPWC 201-3.2 Performed Expansion Joint Filler(Bituminous) ASTM D994.
- Concrete Class Shall be 560-C-3250 for the minimum strength 3000psi at 28 days.
- Reinforce Steel shall be No.4 Rebar per ASTMA615. All reinforcing bars shall be epoxy coated in conformance with ASTM A775.
- The Dowel Bars shall be installed at the joints of the slabs.
- Terminal Joint Type 2
- Portland Cement shall be ASTM C150 Type II/V
- Aggregate base shall be Grading C in conformance with SSPWC Section 201-1.3.2 for and aggregate shall meet value ASTM C131 and C 535.
- Concrete for Fire Truck Washing Down Area pavement shall have a 28-day compressive strength of 4500 psi.

For the concrete pavement close to the building area, it shall compromise with Section 922 Concrete Structural Foundation and Section 0300010 to 030030 .

922-2 MEASUREMENT AND PAYMENT

Measurement and payment for **Rigid Concrete Pavement and Driveway** shall be made at unit price per cubic yard listed on Schedule of Work and Prices. The above contract unit price shall include full compensation for furnishing all labor, materials, tools, equipment, transportation, and incidentals for curb and gutter construction including base material and removal of existing curb, gutter, base material and subgrade in accordance with the Contract Documents.

SECTION 923 –CONCRETE STRUCTURAL FOUNDATION

923-1 SCOPE

The scope of work includes constructing concrete structural foundations for the three prefabricated modular buildings as shown from Sheet 21 to Sheet 32 of Drawing 2025-D-010 and in compliance with the special provisions.

923-2 METHODS

Each foundation must be built upon the compacted subgrade as outlined in the soil report written by Earth System, dated December 16, 2024. The apparatus bay section will follow the guidelines for Mat Slab Foundations, while the interim office and gym will adhere to the specifications for Conventional Spread Foundations.

The concrete foundations will be made of Portland Cement Concrete comply with specified thickness and reinforcements. These foundations must align with the lines, grades, joints, and dimensions outlined in SSPWC Sections 201-1 ("Portland Cement Concrete"), 201-2 ("Reinforcement for Concrete"), and 201-3 ("Expansion Joint Filler and Joint Sealants"). The cement concrete must have a minimum strength of 4,000 psi at 28 days.

The concrete foundation mix shall comply with the special provisions below:

- 031000 Structural Cast-In Place Concrete
- 032000 Concrete Reinforcement
- 033000 Cast-In Place Concrete

923-3 MEASUREMENT AND PAYMENT

Measurement and payment for **Concrete Structural Foundation** shall be based on the unit price per cubic yard as listed in the Schedule of Work and Prices. This cost fully cover all costs related to labor, materials, tools, and equipment needed to complete the work on-site, in accordance with the project plans and the specifications outlined in the special provisions.

SECTION 924–DETENTION BIOSWALE

924-1 SCOPE

This Section specifies materials and work requirements for the detention pond bioswale, following the details on Sheet 12 of Drawing NO. 2025-D-010.

924-2 MATERIALS

924-2.1 General

Materials used in the construction of the detention trench shall be as indicated on the Sheet . Contractor shall submit samples of each type of material used for City’s approval prior to use. Samples shall be provided for drain rock, impermeable liner, native soil, sand and perforated PVC pipe.

924-2.2 IMPERMEABLE LINER

Fabric shall be placed in accordance with subsection 300-10, Geotextiles or Separation, of the SSPWC. It should be a non-permeable liner such as Geomembrane liner or equivalent to prevent any infiltration.

924-2.3 PERFORATED PLASTIC PIPE

Perforated plastic pipe shall be either smooth-wall polyvinyl chloride plastic pipe, corrugated polyvinyl chloride plastic pipe with a smooth interior surface, or corrugated polyethylene plastic tubing. Diameter shall be as indicated on Sheet 11 of Drawing No. 2025-D-010.

Smooth-wall polyvinyl chloride plastic pipe shall conform to the specifications of AASHTO Designation: M 278.

Corrugated polyvinyl chloride plastic pipe with a smooth interior surface shall conform to the material and structural requirements in AASHTO Designation: M 278. The pipe shall have perforations located in the bottom half of the pipe and the perforations shall consist of slots meeting the size and opening area requirements in AASHTO Designation: M 252. The inside diameter and diameter tolerances shall conform to the requirements of either AASHTO Designation: M 252 or M 278.

Corrugated polyethylene plastic tubing shall conform to the specifications of AASHTO Designation: M 252.

Polyvinyl chloride pipe shall be connected with belled ends, or with sleeve-type or stop-type couplings conforming to the specifications of AASHTO Designation: M 278. Polyethylene tubing shall be connected with snap-on, screw-on, or wrap-around fittings and couplings conforming to the requirements of AASHTO Designation: M 252. Solvent cementing of joints will not be required.

The manufacturer of the polyvinyl chloride pipe or the polyethylene tubing shall furnish to the Engineer a Certificate of Compliance.

924-2.4 PERMEABLE BACKFILL

Permeable backfill/drain rock shall be angular gravel meeting the following gradation:

Sieve Size	Percent Passing Sieves
2"	100
1-1/2"	95-100
3/4"	50- 85
1/2"	--
3/8"	15- 55
No. 4	0- 25

No. 8	|	0- 5
No. 200	|	0- 3

924-3 INSTALLATION

924-3.1 Installation of Fabric

Place geomembrane liner over entire interior surface area of the excavation and over drain rock as indicated on Sheet 12 of Drawing No.2025-D-010. The fabric shall be applied without stretching and should lie smoothly, but loosely on drain rock. Ensure that all surfaces are covered and that the fabric is free of cracks, tears or punctures prior to backfilling with granular material.

Protect integrity of continuous fabric layer at all times. Avoid walking directly on the fabric either before or after the fabric is applied. Remove and replace any fabric damaged throughout the course of the work. Take care not to damage, tear or puncture soil separator at any time.

924-3.2 Installation of Perforated Pipe

Install perforated pipe to the center of the detention pond with perforations facing upward as indicated. Pipe shall be above the geomembrane liner as indicated on the Sheet 12 of Drawing No.2025-D-010 and inspected by the Engineer prior to covering.

924-3.3 Preparation of Trench

Insure the gravel and media filter layer meets the Drawing details above the perforated pipe and geomembrane liner. Ensure the surrounding areas of the meets the trench slope requirement with a dry density compaction up to 85%.

924-4 MEASUREMENT AND PAYMENT

Payment for **Detention Bioswale** will be made at the per cubic yard unit price stated in the Schedule of Work and Prices. Excavation for the trench, drain rock, clean sand fill and all other components shall be considered included in the per unit cost. Topsoil and turf hydroseed will be measured and paid separately.

SECTION 925 – LIGHTS

925-1 SUBMITTALS

Submittals to be in accordance with the requirements of Subsection 3-7.1 of the SSPWC. Review or acceptance, as specified, by the City is required prior to commencement of work. The Contractor shall submit product cut sheets and manufacturer's information for all light fixtures for approval prior to purchase.

925-2 METHOD

The CSI specifications that apply to this section are listed below:

Section 260145 Lighting Control Devices
Section 265613 Lighting Pole And Standard
Section 265619 LED Exterior Lighting

- All conduit fittings shall be compatible for their conduit type. Strapping and supports shall be done per CEC.
- All metallic and nonmetallic conduits shall have a grounding conductor sized per NEC 250.122.

925-3 INSPECTION AND TESTING

925-3.1 Lighting Acceptance Testing

Perform all required test for acceptance sheet attached and as required by California Title 24 Requirements. Schedule testing with building City. Calibrate equipment such as light meters, photo electric controls, etc. and program time switches for operations as directed by the City.

925-4 MEASUREMENT AND PAYMENT

Measurement and payment for Lights will be made at the contract lump sum price stated in the Schedule of Work and Prices. The above contract unit price shall include full compensation for furnishing all labor, materials, tools, equipment, transportation, and incidentals for purchase, delivery and installation of lights in accordance with the Contract Documents.

SECTION 926 – LANDSCAPE IRRIGATION

926-1 SCOPE OF WORK

This section sets forth the requirements for Irrigation System Improvements. The Contractor shall perform the work in accordance with Sections 800 – Landscape and Irrigation Materials and 801 – Landscape and Irrigation Installation of the SSPWC, latest edition, as modified and supplemented below.

926-2 Work Included

A. Furnish and install sleeving, piping, fittings, sprinkler heads, drip irrigation, valves, and accessories.

B. Furnish and install all electrical connections and wiring.

C. Excavate and backfill trenches. Place lateral and main irrigation lines as depths detailed on the plans within +/-1”.

D. Testing as indicated in the notes and specifications and as required by the governing agency.

E. Installation and end of maintenance walk and corrections.

F. Ninety-day maintenance period in compliance with **Section 928 Landscape Maintenance and Plant Establishment**.

G. One-year guarantee of Irrigation work and materials.

926-2.1 Related Work Specified Elsewhere

A. Landscape Planting and Maintenance

B. Weekly attendance by superintendent

C. Repair of the irrigation system until the project is accepted.

926-2.2 Protection of Work

The Contractor shall adequately protect the work, adjacent property and the public, and shall be responsible for any damage, injury and/or loss due to the construction of the irrigation system. Damaged facilities shall be repaired within a reasonable amount of time at no additional cost to the City. All existing irrigation systems shall be kept in operation at all times. If the Contractor damages an existing system, it shall be repaired immediately, at no additional cost to the City. If damaged by the public, the City shall compensate the contractor for the cost of the repair. After each repair, all heads of the repaired lateral(s) shall be removed and flushed so the lines can be clear of all dirt and foreign matter.

926.2.3 Submittals

Submittals shall be in accordance with Section 2-5.3 Submittals and as specified herein.

A. Materials List. Within fifteen (15) calendar days from the award of contract, the Contractor shall provide a materials list of all irrigation equipment as specified in the drawings, manufacturer's brochures, maintenance manuals, guarantees, and operating instructions.

B. Shop Drawings. Within fifteen (15) calendar days from the award of the contract, the Contractor shall provide shop drawings as required or necessary to complete the work.

C. Schedule of Work. Within fifteen (15) calendar days from the award of contract, the Contractor shall provide a proposed Schedule of Work.

D. Record Drawings. The Contractor shall provide and keep up to date "As-Built" drawings on the job site at all times. The Contractor shall record accurately on one set of "As-Built" drawings all changes in the work constituting departures from the original approved drawings. The changes and dimensions shall be recorded in a legible and workmanlike manner. All dimensions shall have two (2) permanent points of reference, such as the roadway station points or measures along park center lines. Prior to the landscape architect of record construction certification, the Contractor shall provide corrected and completed sepia mylars of the Record Drawings. Delivery of the sepias will not relieve the Contractor of the responsibility of furnishing information that may have been omitted from the prints. The following items shall be

shown on the Record Drawings.

1. Connection of existing water lines.
2. Water meter(s).
3. Electrical power connection.
4. Electrical meter(s).
5. Controller(s).
6. Routing of mainlines.
7. Sleeves.
8. Gate Valves.
9. Ball Valves.
10. Remote Control Valves.
11. Quick Coupling Valves.
12. Other Related Equipment.
13. The area watered by each Remote Control Valve

E. Controller Charts. Prior to final acceptance, the Contractor shall provide to the City Representative two (2) hermetically sealed, controller charts illustrating valve numbers, gpm's and permanently colored locations of the area covered by each valve. The controller charts shall be of a size that will fit inside the door of the controller cabinet. Controller charts will identify to the nearest foot the locations of mainlines, sleeves valves, controllers and point of connection appurtenances. The controller charts shall reflect any changes made during construction. A copy of each controller chart shall be provided to the City prior to installation certification by the City.

F. Operation and Maintenance Manuals. Prior to final acceptance, the Contractor shall deliver two (2) hard cover, three-ring binders containing:
1. Index sheet stating the Contractor's address and telephone number, list of equipment and addresses of local manufacturer's representatives.
2. Catalog and parts sheets on every material and all equipment installed under this contract.
3. Guarantee statement.
4. Complete operating and maintenance instruction on all major equipment.

G. Equipment to be Furnished. Prior to final acceptance, the Contractor shall provide the following equipment as part of this contract:
1. Two sets of keys for all controllers and enclosures.
2. Two wrenches for each type of sprinkler head.
3. Two quick coupler keys with hose swivels.

H. Substitutions. Substitutions may be permitted under the provisions of Section 4-1.6 Trade Names or Equals. Submittals presenting "equal" products will be considered for approval if the City's Representative determines that the product is equal in all

features, product material and performance. No substitutions shall be allowed without prior written approval from the City's Representative. The Contractor shall be responsible for the performance of any substituted material or product. If the City determines that the substituted material or component is unsatisfactory or if there has not been prior approval, it shall be removed and replaced at the Contractor's expense with the specified material or component

926-2.4 Quality Assurance and Requirements

A. Permits and Fees. See General Provisions, Section 7-5 for payment of permits and fees for Capital Improvement Projects.

B. Manufacturer's Instructions. Manufacturer's instruction and detailed drawings shall be followed in all cases where the manufacturers of materials used in the contract furnish directions covering points not shown in the drawings and specifications.

C. Ordinances and Regulations**.** Contractor shall abide by all applicable local, state and federal rules and regulations relating to the Work Included. All work and materials shall be in full accordance with the latest rules and regulations of the National Electric Code, Uniform Plumbing Code.

D. Explanation of Drawings. Due to the scale of drawings, it is not possible to indicate all offsets, fittings, sleeves, etc. The Contractor shall be fully acquainted with the site prior to construction. Drawings are diagrammatic and are generally indicative of the work to be completed. The work shall be installed in such a manner as to avoid conflicts between irrigation systems, planting and architectural features. Any discrepancies in the plans or with existing field conditions shall be brought to the attention of the Landscape Architect immediately. The Contractor shall not willfully install the irrigation system as shown on the drawings when it is obvious in the field that obstructions, grade differences or discrepancies in area dimensions exist that might not have been considered in the Landscape Design. In the event that notification is not performed, the Contractor shall assume full responsibility for any revision necessary.

E. Correction of Work. Any and all discrepancies or unsatisfactory work shall be corrected by the Contractor at no additional cost to the City. The correction of work shall be finished within a reasonable period of time mutually agreed upon between the City and the Contractor. .

926-2.5 Delivery and Storage

All materials shall be new, first quality, commercial quality and in the original shipping cartons or boxes. The Contractor is responsible for all materials until final acceptance of the work. Store materials in enclosures. Plastic pipe and other materials which can be damaged by weather shall be stored in such a manner as to protect them from sunlight, wind, rain, etc. Do not store

materials directly on the ground. Materials which are damaged in transit or become damaged during storage or progress of the work shall be rejected and replaced at no additional cost to the City. Handle and carry materials in a manner to ensure delivery and placement on the site in sound and undamaged condition. Keep pipes and fittings free from dirt or debris. Do not drag pipe.

926-2.6 Guarantee and Replacement

A. Written Guarantee. The Contractor shall furnish a written guarantee of materials and workmanship for a period of one (1) year from the date of final acceptance. The Contractor shall repair or replace defective items within a reasonable time, but not more than 14 calendar days, from notification by the City at no addition cost to the City.

926-3 METHODS

Add the following to Section 800-2.1.1 General. Piping shall be as follows:

A. The service line from the metered Point of Connection (P.O.C) through the backflow prevention device shall be: Type K copper or red brass.

B. All pressurized mainlines 2” and smaller shall be: SCH 40 solvent-weld P.V.C.

C. All pressurized mainlines 2 1/2” to 3” shall be: CL 315 solvent- weld P.V.C.

D. Pressurized mainlines greater in diameter than 3” shall be: CL 315 bell and gasket P.V.C.

E. Lateral lines up to 2” shall be: SCH 40 solvent-weld P.V.C.

F. Lateral lines greater than 2” shall be /cl 315 solvent-weld P.V.C.

G. All fittings shall be SCH 40 P.V.C. and conform to the latest ASTM standards.

H. All threaded nipples shall be SCH 80 P.V.C. with molded threads.

I. All male threaded fittings shall receive ¾” Teflon tape during installation.

J. All piping shall be installed subsurface. Pipe on grade shall not be allowed unless written preauthorization has been given by the City.

Modify Section 800-2.1.3 Plastic Pipe for Use with Solvent Weld Socket or Threaded Fittings to delete any reference to Schedule 80 pipe for pressurized pipe. Add the following after paragraph 3: “Thrust blocks shall be placed at each change or direction in the mainline sized 3” and larger and shall be per manufacturer’s recommendation. All

fittings shall be Schedule 40 PVC connected with primer and solvent per manufacturer's recommendations. Plastic pipe shall bear the following markings: manufacturer's name, nominal pipe size, schedule or class, type of material, pressure rating, NSF seal of approval, and the date of extrusion. All fittings shall bear the manufacturer's name or trademark, materials, designation, size, applicable schedule and NSF seal of approval."

Add the following at the end of Section 800-2.2.1 General:
"Provide and install one valve box for each Master Valve, Ball Valve, Gate Valve, Remote Control Valve, or Quick Coupler."

Delete Section 800-2.2.7 Valve Boxes in its entirety and replace it with:
"Valve Boxes. Valve boxes shall be made from a durable plastic material resistant to weather, sunlight and chemical action of soils. The cover shall be secured with a stainless steel bolt down mechanism and shall be able to sustain a load of 1,500 psi. Valve box extensions shall be by the same manufacturer as the valve box. All valve boxes shall be manufactured by Ametek, Carson, or approved equal."

Add: "Section 800-2.6 Check Valves:
Check valves shall be installed on all heads or on laterals which have a differential in elevation or 3' or more or as needed to prevent laterals from draining after the system has been shut down. Spring- loaded check valves shall be of plastic construction with soft composition disks. Spring tension shall be adjustable from 4 psi to 15 psi. They shall be located in the swing assembly or be integrated into the sprinkler body. Check valves shall be Valcon ADV, Rain Bird, Hunter, Toro, or approved equal."

Add: "Section 800-2.7 Sleeves
All piping which is located under hardscape surfaces shall be placed in CL 315 sleeves a minimum of 2 times the line size. Control wires shall be placed in a separate conduit adjacent to the pipe sleeving."

Add: "Section 800-2.2.4b Remote Control Valves
Brass or bronze or durable glass filled nylon. The valve body shall be constructed of heavy-duty glass-filled UV-resistant nylon and have stainless steel studs and flange nuts; diaphragm shall be of nylon reinforced nitrile rubber."

Modify Section 800-3.2.1 Conduit. Conduit shall be SCH 40 PVC plastic, gray in color.

Add the following at the end of Section 800-3.2.2 Conductors. "Control wires shall be a different color for each controller valve. Common wires shall be white. Each controller shall have an independent common wire.

Wiring shall occupy the same trench and shall be installed along the same route as the pressurized mainline where possible with the exception of road and sidewalk crossings. Control wires shall be separately sleeved in Schedule 40 conduit under all paved surfaces. Where wire is placed in the mainline trench, the wiring shall be taped together at interval of ten (10) feet. A two (2) foot expansion curl shall be provided within three (3) feet of each wire connection. Wire connections shall be grease type connectors, 3M DBY Direct Bury Splice Kit PN-09053, or approved equal. Use one kit per connection. Three continuous spare control wires, blue in color, shall be installed with all pressurized Mainline(s) from the controller enclosure to the ends of the Mainline."

Add the following to the end of Section 801-5.1 General: "Contractor shall use extreme caution in working near utilities. The Contractor shall be responsible to call Underground Service Alert of Southern California, a.k.a. Dig Alert for location of utilities. The Contractor shall be responsible for damages to utilities that are caused by his/her operations or neglect. The Contractor shall verify all grades and installation conditions. No work shall begin until unsatisfactory conditions are corrected."

Modify Section 801-5.3.1 General, second paragraph: Pipe shall be bedded in 3" of sand above and below the pipe rather than 2".
Drip Irrigation:

A. Bubbler Heads, Rotators and Dripline: Types and sizes as shown on the Contract Drawings.

B. Provide equipment of one type and flow characteristic from the same manufacturer and bearing the manufacturer's name and identification code in a position where they can be identified in the installed position.

C. Bubbler Head and Rotators to be pressure-compensating type.

Add the following at the end of Section 801-5.3.1 General:

A. Staking of Lines. Prior to installation, the Contractor shall stake out all pressure supply lines, routing, and location of water distribution heads. The City shall approve the location of all equipment and Point(s) and Connection prior to installation.

B. Water Supply. The irrigation system shall be connected at the approximate location shown on the design plan and approved in the field by the City Engineer.

C. Electrical Supply. Electrical connections for the controller shall be made as indicated at the approximate location on the plans and approved in the field by the Engineer. The Contractor shall be responsible for connecting the irrigation controller to the nearest power source. Contractor shall coordinate with the electrical provider and the City.

D. Observation Schedule. The Contractor is responsible for notifying the Inspector in advance for the following meetings/inspections:

1. Pre-construction meeting – 7 days
2. Mainline pressure test – 48 hours
3. Lateral line & head installation – 48 hours
4. Coverage test – 48 hours
5. Final turn over – 7 days

E. Installation.

1. Trenching.
   a. Trenches shall be straight, on an even grade, and in the approximate location shown on the plans.
   b. Where it is necessary to excavate adjacent to existing trees, the Contractor shall take every precaution to avoid injury to the trees or their roots. No backhoe or trenchers shall be used within the tree dripline, unless City Representative is on site. Hand digging is required within tree driplines. All roots 2” and larger shall be tunneled under and shall be heavily wrapped with burlap to prevent scarring or excessive drying. When the roots are smaller than 2” in diameter, the wall of the trench adjacent to the root shall be hand trimmed, making clean cuts through the roots. Trenches adjacent to the root shall be closed within twenty-four (24) hours. Where this is not possible, the side of the trench adjacent to the tree shall be kept moist and shaded with burlap or canvas.
   c. Provide a minimum cover of 24” over all pressurized mainlines.
   d. Provide a minimum cover of 18” over all non- pressurized lateral lines.
   e. Provide a minimum cover of 24” for all control wire.
   f. Provide a minimum of 30” cover under AC paving and roadways.

2. Backfilling.

   Trenches shall not be backfilled until all required tests and inspection have been performed and the conditions have been approved by the City Representative. Trenches shall be filled with 3” sand above and below mainline pipes. No material larger than
   ½ inch shall be permitted in the initial backfill. Backfill shall be tamped in 4-inch layers under all piping and mechanically compacted to a dry density equal to adjacent undisturbed soil in landscape areas and shall conform to adjacent grade. Truck wheels shall not be used to compact soil. If settlement occurs and subsequent adjustments in pipe, valves, valve boxes, sprinkler heads, lawn, planting, or other construction is

necessary, the Contractor shall make all required adjustments at no additional cost to the City.

3. Trenching and Backfilling under Paved Surfaces.
   a. The Contractor shall install and cap all piping under paved surfaces prior to paving work whenever possible.
   b. Sleeves under existing pavement may be installed by directional boring. No hydraulic driving is permitted under AC pavement at depths less than 36”. No hydraulic driving shall be permitted under concrete roadways. The Contractor shall repair any and all damage to existing facilities including paved surfaces with like materials in accordance with City standards and details.
   c. Any cutting or breaking of sidewalks and/or concrete that is necessary shall be completed and replaced in kind by the Contractor as a part of the contract cost. Permission to cut or break sidewalks and/or concrete shall be obtained from the City prior to start of work.
   d. Sleeves shall be installed a minimum of 6” beneath the bottom of the pavement subgrade or 30” from finish surface, whichever is greater.
   e. Mainline sleeving shall be a minimum of 2 times the line size diameter. The sleeve shall have a minimum of 1-inch clearance from the mainline and shall extend a minimum of 18” beyond such pavement unless physically impossible. In-line fittings or couplings shall not be permitted under paved surfaces except when the length of the line is greater than 20 feet. The ends of sleeves shall be capped until piping is laid.
4. Line Clearance.
   All lines shall have a minimum clearance of six (6) inches from each other and from lines of other trades. Parallel lines shall not be installed directly over on another.
5. Assemblies.
   a. Routing of lateral lines is diagrammatic. Install lines and assemblies in such a manner as to conform with the intent of the drawings, comply with the irrigation details, and provide and complete an operable irrigation system. The Contractor shall not willfully install a system, which will not fulfill the intent of adequate coverage. The Contractor shall be

      responsible for adjustments to system to achieve adequate coverage at no additional cost to the City.
   b. No manifolds shall be allowed in the irrigation system. Each assembly shall have its own outlet.
   c. Install all assemblies in accordance with its respective

detail. In the absence of a detail or specifications, complete the work in accordance with best standard practice with prior approval of the Landscape Architect of Record or the City Representative.

d. Carefully inspect all PVC pipes and fittings to ensure that they are cleaned of dirt, dust, and moisture prior to installation. Solvent welding methods shall be as recommended by the pipe, fitting, and solvent manufacturers.
e. On PVC to metal connections, the Contractor shall work the metal connections first. Teflon tape or approved equal shall be used on all threaded PVC to PVC connections and on threaded PVC to metal joints. Where threaded PVC connections are required, use threaded hardening pipe dope on all threaded plastic- to-metal connections, except where noted otherwise.
f. The Contractor shall construct concrete thrust blocks at all changes in direction on mainlines 3" or larger. Pipe restraints may be used in lieu of thrust blocks on bell and gasket piping.

Delete the first sentence of paragraph two (2) of Section 801-5.5.3 Riser and Nozzle Line Installation which states "Risers for oscillation sprinklers and nozzle lines shall be galvanized steel pipe. All other risers may be galvanized steel or Schedule 80 PVC." Replace with "All risers shall be threaded Schedule 80 PVC pipe." Delete reference to single-swing joint assemblies in paragraph six (6). All riser assemblies shall be a minimum of double-swing joints.

Add the following paragraph after paragraph two (2) of Section 801-5.5.4 Sprinkler Head Adjustment.
"The Contractor shall adjust all irrigation components for optimum performance. There shall be no irrigation water onto walks, or roadways. If it is determined that adjustments in the irrigation equipment will provide proper and more adequate coverage, then adjustments shall be made at no additional cost to the City. Adjustments may also include but are not limited to: changes in nozzle size, adding heads, or changing the riser locations."

Add the following after the first paragraph of Section 801-5.6 Automatic Control System Installation.

"The location of the controller shall be as shown on the plans and shall be approved by the City Representative before installation. The Contractor shall be responsible for coordinating the electrical service connection and connecting the controller to the power source. Remote control valves shall be connected to the controller in numerical sequence as shown on the plans."

Add the following to Section 801-5.6.2.1 Pipeline Pressure Test. General. "Pressure mains shall be tested prior to the installation of control valves. Lines shall be capped at the control valve connections. Mainlines shall be tested at a pressure of 150 psi for not less than four hours. Lateral lines shall be tested at a pressure of 100 psi for not less than two hours."

Add the following to the end of Section 801-5.7.4 Operational Test. "Any items deemed not acceptable by the City Representative shall be reworked to the complete satisfaction of the City Representative. The Contractor shall have turned over all accessories, charts, record drawings, and equipment as required before the project can be accepted. The Contractor shall provide certification testing for all backflow preventers by a certified backflow prevention technician as directed by the Engineer. Certification shall be conducted in accordance with all State, Federal, and local codes and regulations. The original written certification shall be submitted to the City prior to acceptance of the project. The Contractor shall arrange and pay for all testing and certification. The Contractor shall complete an irrigation coverage test and have written acceptance of the same prior to beginning any planting work with the exception of planting specimen trees and palms."

Add the following section:
"Section 801-5.7.5 Temporary Repairs. The City reserves the right to make temporary repairs as necessary to keep the irrigation in operating condition. The exercise of this right by the City shall not relieve the Contractor of his/her responsibility under the terms of the guarantee."

Add the following section:
"Section 801-9 Guarantee. The Contractor shall repair or replace defective items within a reasonable time frame at no additional cost to the City. Damage to plant materials or adjacent facilities due to defective items or workmanship shall be repaired or replaced at no additional charge to the City."

926-4 MEASUREMENT AND PAYMENT

Measurement and payment for **Landscape Irrigation** shall be paid at the unit price per linear foot listed on Schedule of Work and Prices and shall include full compensation for installation of a functioning irrigation system, including connection to existing water meter and coordination with the water purveyor, complete in place as shown on the plans, as specified in the Standard Specifications and these Special Provisions, and as directed by the City Engineer and no additional compensation will be allowed therefore.

SECTION 927 – LANDSCAPE PLANTING

927-1 SCOPE OF WORK

This section sets forth the requirements for Landscape Improvements. Perform the work in accordance with Sections 800 – Landscape and Irrigation Materials and 801 – Landscape and Irrigation Installation of the SSPWC, latest edition, as modified and supplemented below.

927-1.1 Work Included

A. Gather soil samples and coordinate soil testing of import soils.

B. Complete finish grading, furnish and install all import soil necessary to replace over excavated material and for backfill required to complete the planting shown on the plans and details.

C. Furnish and install all required backfill material, soil amendments, fertilizers, and herbicides.

D. Furnish all labor, material, equipment and services necessary to provide all landscape planting, complete, in place, as shown and specified.

E. Furnish and install all planting accessories, tree stakes, ties, and guys.

F. Provide a plant establishment period of not less than thirty (30) continuous calendar days after all plant material has been installed and is in a healthy condition.

G. Provide maintenance period per Section 940- Landscape Maintenance.

H. Guarantee and provide replacement as necessary, in accordance with Subsection 1.7 of these Landscape Planting and Maintenance provisions.

927-1.2 Related Work Specified Elsewhere

A. **Section 926 Landscape Irrigation**- 2.2 Protection of Work

The Contractor shall adequately protect the work, adjacent property and the public, and shall be responsible for any damage, injury and/or loss due to the construction of the landscape improvements. Damaged facilities shall be repaired within three working days at no additional cost to the City.

927-1.3 Slope Planting and Erosion Control

The landscape along the proposed slope shall be prepared and maintained with effective erosion control measures. This control shall include appropriate planting, erosion control blankets, soil stabilizers, or other methods approved by the Engineer.

The surface of all cuts (slopes) is more than 5 feet in height and fill (slope) more than 3 feet in height shall be protected against erosion by planting with grass or ground cover plants. The plants selected and

planting methods used shall be suitable for the soil and climatic conditions of the site.

Planting may be modified for the site if specific recommendations are provided by the Geotechnical Engineer or soil report. Specific recommendations must consider soils and climatic conditions, irrigation requirements, planting methods, fire-retardant characteristics, water efficiency, maintenance needs, and other regulatory concerns.

927-1.4 Submittals

Submittals shall be made in accordance with Section 2-5.3 Submittals Agronomic Soils Report. After completion of rough grading and prior to soil preparation, the Contractor shall provide the testing of import soils for approval by the City Representative, and composted materials by an independent agronomic soils testing laboratory at least 2 weeks in advance prior to actual work (member of the California Association of Agricultural Labs). No less than three (3) samples within the park planter areas shall be taken. Representative soil samples shall be taken in the field and a written report shall be prepared by the soil scientist and shall include tests for texture, fertility, toxicity along with recommendations for soil amendments as measured in cubic yards per 1,000 square feet to a depth of 6 inches, excavation pit fertilization and post maintenance fertilization. Soils test shall be performed after soil preparation to confirm that amended soil is in compliance with the pre-plant soils report and specifications.

Deviation from the control mix shall not exceed twenty percent (20%).

A. Materials List. Within two weeks (14) calendar days after award of Contract, the Contractor shall submit to the City's representative, two

(2) copies of documentation that all materials are available for approval. Materials shall not be ordered until materials submittals have been approved. Submit the following:

1. Plant Materials (include pictures of plant(s) with a scaling object such as a ruler or person). City Representative shall tag all trees at the nursery and has the option of tagging all project plant material at the nursery.
2. Amendments
3. Topsoil- Class A
4. Commercial Fertilizer
5. Mulch

B. Substitutions. Any and all substitutions due to unavailability must be requested in writing prior to confirmation of ordering. Contractor shall provide a list of nurseries and suppliers contacted for

verification of unavailability. Substitutions shall not be permitted after the Material List has been reviewed and accepted. No substitutions will be allowed without prior written approval by the City Representative. Equipment or materials installed or furnished without prior written approval may be rejected and the Contractor required to remove and replace such materials from the site at the Contractor's own expense. The Contractor shall not request a plant substitution based solely on the Contractor's failure to verify the cost of plant material prior to bidding. The Contractor shall bear the responsibility of providing the material as shown on the plans. Delivery to the site may begin upon approval of samples by the City's Representative.

C. Certificates of Delivery. Prior to installation, the Contractor shall submit to the City's Representative two copies of all manufacturer's literature, receipts of sale, and laboratory analytical data, bearing the manufacturer's or supplier's guaranteed analysis. The Contractor shall provide certificates of delivery with each shipment of materials. Certificates shall state source, quantity or weight, type and analysis, and date of delivery. All certificates shall be delivered to the City's Representative. Written certifications required to be submitted include:

1. Size and quantity of plant materials
2. Quantity of all soil amendments.
3. Quantity and quality of topsoil.
4. Quantity of commercial fertilizer.
5. Quantity of other additives such as sulfur, iron sulfate, gypsum, etc.
6. Quantity and composition of organic mulch.

927-1.5 <u>Quality Assurance and Requirements</u>

A. Permits and Fees. See General Provisions, Section 'E' 7-5 for payment of permits and fees for Capital Improvement Projects.

B. Ordinances and Regulations. Contractor shall abide by all applicable local, state and federal rules and regulations relating to the Scope of Work.

C. Explanation of Drawings. The Contractor shall be fully acquainted with the site prior to construction. Drawings are diagrammatic and are generally indicative of the work to be completed. The work shall be installed in such a manner as to avoid conflicts between irrigation systems, planting and architectural features. Any discrepancies in the plans or with existing field conditions shall be brought to the attention of the City's Representative immediately. The Contractor shall not willfully install the planting as shown on the

drawings when it is obvious in the field that obstructions, grade differences or discrepancies in area dimensions exist that might not have been considered in the landscape design. In the event that notification is not performed, the Contractor shall assume full responsibility for any revision necessary.

D. Manufacturer's Recommendations**.** Manufacturer's recommendations shall apply when no other direction is given or when it is a more stringent requirement than these Specifications.

E. Correction of Work. The Contractor, at no additional cost to the City, shall correct any and all discrepancies or unsatisfactory work. The correction of work shall be finished within a reasonable period of time mutually agreed upon between the City and the Contractor.

927-1.6 Delivery, Storage, and Handling

A. Plant Material. The Contractor shall notify the City's Representative seven (7) days in advance of delivery of all plant materials and shall submit an itemized list of the plants in each delivery. Maintain and protect plant material in a healthy condition prior to planting. Plant material which has been rejected or damaged after acceptance shall be removed from the site and replaced with acceptable materials.

927-1.7 Guarantee and Replacement

A. Written Guarantee. The Contractor shall furnish a written guarantee of materials and workmanship for a period of one (1) year from the date of final acceptance. The Contractor shall repair or replace defective items within a reasonable time, but not more than 14 calendar days, from notification by the City at no addition cost to the City. All shrubs, groundcover, and lawn shall be guaranteed for a period of ninety (90) days from final acceptance. All trees shall be guaranteed for a period of one (1) year from final acceptance. All guarantee periods shall begin from the time of final written acceptance by the City. This acceptance shall be after the Installation Maintenance period in compliance with Specification Section 941 herein and as approved by Engineer.

927-1.8 Order of the Work

A. The irrigation shall be complete and operational prior to the start of any planting installation. The Contractor shall have completed an irrigation test in the presence of the City's Representative and have written approval for the installation. An exception may be made in the case of the installation of specimen trees 24" and larger and palms. The Contractor shall be responsible to provide adequate water to the specimen trees by whatever means necessary until the irrigation is complete and operational.

927-2 METHODS

Add the following to Section 800-1 Landscape Materials:

"Use only materials of the brands, type or species noted on the drawings or approved equal. Materials shall be new; plants shall be of the type and size specified, standard approved and first grade quality free from diseases or insects. All plants shall be tagged with botanical name (including variety) and size in accordance with the standards of practice recommended by the American Association of Nurserymen. Any rejected material shall be promptly removed from the site." Add the following to Section 800-1 Topsoil: **"**Topsoil shall be Class "A" as specified in Section 800-1.1. Topsoil to be used as planting medium shall be fertile, well-drained, of uniform quality, free from stones over 1-inch in diameter, sticks, oils, chemicals, plaster, concrete and other deleterious materials."

Add the following to the topsoil requirements at the end of Section 800-1.1.2:

"d) Boron and Sodium Content. Boron content shall not exceed 1 PPM as measured by the saturation extract. Sodium absorption ratio (SAR) shall not exceed 6 and the electrical conductivity of the saturation extract shall not exceed 3.0 milliohms per centimeter at 25 C."

Add the following at the end of Section 800-1.2.1 General:

"Soil Amendment. The following organic soil amendments are for bid purposes only:

A. After soils test and at the direction of the soils lab, provide stable humus with a carbon/nitrogen ratio of less than 25. See attached soils report.

B. Iron sulfate, 20% iron (expressed as metallic iron), derived from ferric and ferrous sulfate, 10% (expressed as elemental). Ten pounds per 1,000 square feet." The contractor is directed to fertilize, amend or otherwise treat the soil as recommended and specified by the soils laboratory report."

Add the Following at the end of Section 800-1.2.3 Commercial Fertilizer: "Fertilizer pellets or granules shall be slow-release, 12-8-8 by Gro Power (15065 Telephone Avenue, Chino, CA (909) 393-3744), Best Fertilizers or approved equal, and shall be mixed by the commercial fertilizer supplier. It shall be applied at the rate recommended by the manufacturer and the soil report. Fertilizer shall be applied every 45 days throughout the maintenance period at a rate agreed upon by the Soils testing consultant A minimum of two applications shall be completed.

The Contractor shall provide the City's Representative with a materials receipt for the fertilizers used. The Contractor shall provide the City with 48- hour notice prior to fertilization. Should the Contractor fail to provide said notice or materials receipt, the Contractor may be subject to reapplication of the materials in the presence of the City's Representative. Plant tablets shall be slow-release, 7-gram tablets as manufactured by Gro Power, Best, or an approved equal. They shall be applied at a rate of

three tablets per 1- gallon plant, nine tablets per 5-gallon plant, fifteen tablets per 15-gallon plant, sixteen tablets per 24” box tree, and per manufacturer’s recommendations for larger box sizes.

Add the following to Section 800-1.2.4 Organic Soil Amendment:

“Organic Soil Amendment shall be Type 1 and shall not include Pine or Eucalyptus.”

Add the following to Section 800-1.2.5 Mulch:

“Mulch shall be Type 1 only (ground wood product). Mulch shall be recycled chippings from an approved source that do not contain trash or debris. If recycled materials are not available, a premium-grade shredded cedar bark shall be used. The Contractor shall apply a 3” depth of mulch to all planter areas having a grade of 1:6 or less. Mulch shall be a typical “Forest Floor Blend” with particles having a size between 2” and 4”. Contractor shall submit a sample of the proposed mulch to the City’s Representative for approval prior to delivery to the site.”

Add the following Section:

“800-1.2.6 Pesticides and Herbicides. All chemicals used for pest control shall be registered by the State of California Department of Food and Agriculture and the Environmental protection Agency with registration identification on the label. All chemicals shall be applied as per the registered label instruction and manufacturer’s recommendations. Restricted chemicals shall be applied in a manner consistent with State and Federal Law by a licensed applicator possessing the appropriate classification. No chemicals may be used on site without prior written approval of the City’s Representative.”

Add the following to Section 800-1.4 Plants:

“Trees and shrubs provided shall be of equal or better quality to that available at Norman’s Nursery, BrightView Tree Company or Boething Treeland Farms.

A. Additional plants may be necessary to fill all areas at the on center spacing or not illustrated on the plan.

B. All plant material shall be No. 1 grade healthy, disease, and pest free, without visible damage, abrasions, or disfigurement.

C. Plants specified shall be delivered in the containers specified and true to industry standard size for the container specified. Plants shall have been growing with the specified container a minimum of six months and no longer than one (1) year and shall be properly rooted without being root bound. Plants with cracked or broken root balls shall be rejected.”

Delete the last sentence of Section 800-1.4.1 General which states, “Other than normal side pruning during the growth period, no pruning shall be done prior to inspection at the nursery.” And replace it with:

"Trees which have be topped, headed back, or otherwise damaged by pruning, shall be rejected. Side pruning of lower branches is discouraged and may be grounds for rejecting trees. Trees shall not be pruned after selection and delivery to the site without prior written approval of the Landscape Architect of record or City's Arborist. Trees which have been pruned without authorization may be subject to removal and replacement at no additional cost to the City." Add the following to Section 800-1.4.2 Trees:

A. "All trees shall be true to type or name as ordered or shown on the plans and shall be individually tagged or tagged in groups by species and cultivar (variety).

B. All trees shall be healthy, have a form typical for the species or cultivar, be well-rooted, strong in branching pattern and properly trained. Trees which are deemed by the City Representative not to have these qualities will be rejected and replaced without additional charge to the City.

C. All trees shall comply with Federal and State laws requiring inspection for plant diseases and pest infestations. Inspection certificates required by law shall accompany each shipment of plants. Clearance from the County Agricultural Commissioner as required by law, shall be obtained before planting trees delivered from outside the County in which they are to be planted.

D. The rootball of all trees shall be moist throughout and the crown shall show no signs of moisture stress.

E. The tree crown of broad-leaved, decurrent trees shall have a single straight trunk that has not been headed or topped. Potential lateral scaffolds (height of lowest scaffold depends on landscape use) for small-growing trees such as Crape Myrtle shall be at least 2" apart vertically, which could be trained in the landscape to 3 to 7 branches 4" or more apart vertically. Large-growing trees such as Oak shall have lateral scaffolds at least 6" apart vertically, which could be trained in the landscape to 5 to 9 branches 18" apart or more vertically. Branches shall be radially distributed around the trunk, be not more than 2/3 the diameter of the trunk measured 1" above the branch and be free of included bark in attachments (bark embedded between the trunk and a lateral). No laterals below the lowest potential scaffold should be larger than ¼ the trunk diameter at point of attachment.

F. Small temporary branches (less than ¼ diameter of trunk) below the scaffold branches should not be removed.

G. Broad-leaved or coniferous, excurrent (central trunked) trees shall have a single, straight trunk with no double leaders (co-dominant stems) or vigorous, upright branches competing with the leader. Radial and vertical distribution of branches shall form a symmetrical crown.

H. Each tree shall comply with the above criteria without having or having had to remove, now or within the previous growing season (at least six months), more than 25 percent of the branches of a size similar to or larger than those of the potential scaffold branches.

I. The tree shall be free of roots visibly circling the trunk, and free of “knees” (roots) or kinks protruding above the soil.

J. If in a tapered container, the rootball periphery shall be free of circling roots larger than ¼” in diameter and a bottom mat of roots ¼” or larger (the acceptable diameter of circling peripheral roots depends on species and size of the rootball). When untied from the nursery stake, the tree shall not bend to touch the top rim of the container.

K. The trunk and main roots shall be free of circling roots and kinks within 2” of the trunk to a depth of 2-1/2”. Inspect the roots by tipping the rootball or container on its side and with a small jet of water expose the roots within 2” of the trunk to a depth of 2-1/2” below the topmost root attached to the trunk. After inspection, replace soil washed from around the trunk with a similar soil mix (less than ten percent of the total rootball volume should be added). If circling of roots is suspected, a representative sampling of approximately two trees or two percent of the total for each species whichever is greater may be removed from their containers and cleaned of soil. The trunk and main roots shall be free of circling and kinked roots. Circling roots at the periphery of the rootball shall not be reason for rejecting a tree unless the circling roots are large for the species and shoot growth is not acceptable for the species.

L. In case the sample trees inspected are found to be defective, the City reserves the right to reject the entire lot or lots of trees represented by the defective samples. Any plants rendered unsuitable for planting because of this inspection will be considered as samples and will not be paid for.

M. Trees shall be of sufficient height and caliper for the container size and plant type specified. Typically, 15-Gallon trees shall be 6’-8’, 24” box trees shall be 8’-10’, 36” box trees shall be 10’ –12’.

N. Tree pits shall be tested for adequate drainage prior to planting trees. 12-inch diameter by 72” depth augured pits (locations per plan) shall be dug and filled with water in the presence of the City Representative. After 24 hours, the City Representative shall observe all holes to determine if water has drained completely. Relocate tree(s) or install augured sumps in holes which fail to drain properly, as directed by the City Representative.”

Add the following at the end to Section 800-1.4.4 Flatted Plants:

“All material from flats shall be well rooted, not cuttings. Flat grown plants shall remain in the flats until transplanting.”

Modify Section 800-1.5.3 Tree Stakes as follows:

Delete the first sentence “The type of tree stake shall be as specified in the Special Provisions.” And replace with the following:

“Tree stakes shall be straight Lodge Pole Pine free from knots, splits, checks or disfigurement. Stakes shall be 2-inch nominal size and 10 feet in length. Stakes shall have a tapered drive point and chamfered top and shall be treated with an approved wood preservative. Supports for staking shall be rubber cinch ties manufactured by V.I.T. Company, Phone: (949) 891- 8338, or approved equal, attached in a figure eight position, and secured with a nail at the stake. All wood preservatives shall be in accordance with the latest State, Federal, and local codes and regulations. Stakes shall not rub the lower branches in such a way the injury is caused to the tree. In

some cases, the stake may need to be cut so they do not cause damage to the scaffold branches.”

Add the following at the end of Section 801-1 General:

“Perform actual planting only during periods when weather and soil conditions are suitable and in accordance with locally accepted practice.”

Modify Section 801-2.1 to delete the reference to Class B Topsoil. Only Class A Topsoil will be utilized on the project. Add the following after the last sentence:

A. “Clearing and Grubbing.

1. All existing planting within the limits of work shall be removed, with the exception of the plants specifically called out in the drawings to remain, or as specified by the City’s Representative in the field. Protect in place plants to remain. All vegetation to be removed shall be grubbed, raked, and cleared from the site. The Contractor shall remove from the site and dispose of in a lawful manner, all materials grubbed from the site at no additional cost to the City.
2. All subsurface rocks over 2” in diameter and other underground obstructions which may hinder proper fine grading, tilling, or planting shall be removed to a minimum depth of 12”. All abandoned utility lines uncovered or severed shall be cut below grade and capped or plugged with concrete. Explosives shall not be used for removal. Damage to utility lines shown on the plans shall be repaired at the Contractor’s expense.
3. The soil within the planting pits shall be over-excavated to the specific depths as defined per park on the project plans. The over-excavated pits shall be backfilled with native soil and re- compacted to 80% prior to setting new trees or shrubs in plant pit and backfilling with amended backfill.

B. Perennial Weed Abatement. If live perennial weeds exist on site at the beginning of work, a non-selective herbicide shall be sprayed per

manufacturer's recommendations. Contractor shall mix dye with the herbicide to insure adequate coverage. The sprayed plants shall be left intact for a minimum of 15 days. The plants shall then be mowed and grubbed to a depth of at least 4" below the finished surface.

C. Weed Abatement and Removed Tree Root Sprouting. Upon completion of soil preparation and installation of all specimen trees, begin the weed abatement program Spray a non-selective, trans locative herbicide to eradicate any germinated weeds or newly sprouted roots from trees that have been removed. Translocation shall be 7-10 days or an approved alternate time period. If weeds or grasses exist, re-water four times daily for fourteen consecutive days, until new growth appears. Reapply herbicide. Remove weeds after herbicide has had sufficient time to kill the weeds. Repeat as necessary to eradicate weeds. Maintain the site weed free until final acceptance by the City utilizing mechanical, manual, and/or chemical treatment. After all plant material has been installed and a 30-day plant establishment period has passed an approved pre-emergent shall be applied before installation of organic wood mulch. Herbicide must be approved by the City Representative.

D. Soil Amendment. All planting areas with slopes flatter than 2:1 shall receive soil amendments. The amendments specified in the included agronomic soils report shall be uniformly spread and cultivated thoroughly by means of a mechanical tiller into the top 6" of soil."

Add the following at the end of Section 801-2.4 Finish Grading:

"All rocks, clods, sticks or other debris shall be removed from the site and disposed of in a lawful manner at the Contractor's expense."

Delete from Section 801-4.5 reference to the use of Type 2 or 3 soil amendment. Only Type 1 shall be used. Delete any reference to Type 2 through 6 mulches. Only Type 1 mulch shall be used.

Item c) shall be modified from "c) Prepared soil mix shall be deposited in the remainder of the hole to finish grade." to "c) Prepared soil mix *and planting tablets per* Section 800-1.2.3 shall be deposited in the remainder of the hole to finish grade."

Add the following to the end of the section:

A. "Planting Layouts. Locations for all trees, specimen shrubs (5 gallon and larger), and outlines of areas to be planted shall be marked on the ground by the Contractor before any plant pits are dug. All locations shall be approved by the Landscape Architect and City's Representative. Layout shall be accomplished with flagged grade stakes indicating plant names and specified container size on each stake. It shall be the Contractor's responsibility to confirm with the City and governing agency, the location and depth of all underground utilities and obstructions. No planting shall take place until an irrigation coverage test has been completed and the

irrigation system has been approved, in writing by the City, as complete and in place. (See Section 1.8 of these specifications.")

Section 801-4.6 Plant Staking and Guying**,** including Sections 801-4.6.1 Method "A" Tree Staking, 801-4.6.2 Method "B" Tree Staking and 801-4.6.3 Guying shall be deleted in its entirety, and replaced with:

"Tree Staking. Trees shall be staked as shown on the Plans. Trees 36" and larger may not need to be staked. The Contractor shall not stake trees if they are able to stand straight without added support. The Contractor shall be responsible for determining the necessity of staking. Staking and guying shall be done immediately after planting using the materials specified in Section 800-1.5.3 (modified by these specifications). After staking, all plant material shall be removed within 18" of the tree trunk. This area shall be covered with Type 1 mulch to meet finish grade."

Delete from Section 801-4.7 Ground Cover and Vine Planting, the following sentence from paragraph four (4):

"A 1-inch layer of Type 1,2,3, or 4 mulch shall be spread over the planted areas." and replace with "A minimum 3" layer of Type 1 mulch shall be spread over all planted areas."

927-2.1 Preservation of Public Trees to Remain

Per section 7-9 of the project General Provisions, tree protection shall include avoiding damage to the above ground tree trunk, branches and bark, the below ground root system and the surrounding soil. All roots for existing trees to remain over three (3) inches in diameter to be inspected by an Urban Forestry representative and evaluated prior to their removal. Roots located within the work area shall be protected from compaction, storage of materials or equipment, and /or severing.

Existing trees to remain shall be deep watered continuously throughout construction per Parks & Recreation Department's requirements. Contractor shall water the on-site trees (not marked for removal) with a routine schedule as needed as instructed by the City's Urban Forestry Representative.

927-2.2 Site Furnishing and Miscellaneous Materials

The contractor is responsible for completing the site furnishing and installing miscellaneous materials, including decorative boulders (3'-5') . The specifications for these miscellaneous items must adhere to the submittal requirements outlined in **Section 900-4**. This includes providing cutsheets and equipment details to the Engineer and the Department of Parks and Recreation. In addition, the miscellaneous placement shall follow the marks indicated on Sheet 92-95 of Drawing No.2025-D-010.

927-2.3 Delivery, Storage, and Handling

Store and protect all site furnishings. Contractor shall be responsible for all site furnishings and in the event of missing or stolen items, they shall be replaced at the Contractor's sole expense as mentioned in **Section 900-6**.

927-3 MEASUREMENT AND PAYMENT

Measurement and Payment for **Landscape Planting** and **Slope Planting and Erosion Control** shall be measured at the contract unit price per square foot (SF) as indicated in the Schedule of Work and Prices and shall include full compensation for each item completed in place. The contract unit prices shall include full compensation for all labor, materials, tools, equipment, and incidentals for completion of the work.

SECTION 928 – LANDSCAPE MAINTENANCE AND PLANT ESTABLISHMENT

928-1 GENERAL

Section 308-6 Maintenance and Plant Establishment of the SSPWC is modified as follows:

928-2 MATERIALS

All materials used in conjunction with the Maintenance Work shall conform to the material requirements originally specified for the Work.

928-3 MAINTENANCE PERIOD

After all Work indicated on the drawings or herein specified, including all planting inspected and approved by the Engineer, the Contractor shall maintain all planted areas by means of continuous watering, weeding, spraying, and/or any other operation necessary for their care and upkeep for the period of ninety **(90)** days with maintenance and inspection at 30-day intervals.

928-4 REQUIREMENTS OF REGULATORY AGENCIES

Any required spraying work shall be done in accordance with governing agencies.

928-5 REPLACEMENTS

Contractor shall immediately replace any and all plant material, which, for any reason, dies or is damaged while under his care. Replacement plants shall be of the same quality, size and species as the originally specified plants. Alternates will not be permitted unless approved by the Engineer.

928-6 REPAIR

Damage to planting areas shall be repaired immediately. Depressions caused by vehicles, equipment and foot traffic will be filled with soil, leveled and replanted. Exterminate gophers and moles that damage new slope plantings and repair damage.

928-7 CLEAN-UP

All planted areas shall be kept free of debris and shall be weeded at not more than ten **(10)** day intervals. At completion of the maintenance period all areas, included in the contract shall be clean and free of debris and weeds; all plant materials shall be live, healthy and free of infestation.

928-8 SHRUBS

1. Trimming, selective pruning, thinning and training of ornamental plants shall be performed as needed or required to maintain a pleasing appearance.
2. Weed Control – Areas shall be kept in “weed-free” appearance. Weeds may be controlled with a pre-emergent herbicide and/or post emergent herbicide and removed offsite immediately after desiccation. At no time shall weeds be allowed to become established. Contractor is herewith advised that at no time on the City’s property under this specification shall weed oil or diesel fuel be allowed as an herbicide.
3. Pest and Disease Control

- Provide rodent, insect, pest and disease control services at the first sign or symptom of infestations, or as directed by the Engineer.
- Notify the Engineer at the first sign or symptom of pest or disease.
- Perform pest and disease control services in accordance with applicable laws regulations set forth for commercial spraying for hire.

4. Trash and Debris Pickup – Areas shall be “trashed” weekly, and debris picked up and removed from site with that visit.
5. Hand watering

- Provide water to all shrubs and trees as required to maintain healthy material that will establish to the site during the maintenance period.

928-9 IRRIGATION SYSTEM

Contractor is responsible for maintaining, operating and adjusting the irrigation system, and performing minor repairs as required, as herein defined.

- On each visit, Contractor shall visually and hydraulically inspect the irrigation system to insure that no irrigation bag breakage has occurred, no foreign matter is clogging the irrigation device and that water coverage is proper, inspect the DRiWATER Tubes and Gel Pacs and replace Gel Pacs as necessary, and correct any other inadequacies that might impair the proper performance of the irrigation system. Minor irrigation repairs shall be accomplished by the weekly maintenance crew as needed with the like kind materials unless otherwise authorized by Engineer.
- Malfunctioning irrigation bags shall be brought to the attention of the Engineer for approval of appropriate repair.

- At least twice every two weeks, the Contractor shall review water requirements of the project by probing all the plant material and apply water as necessary to ensure healthy plant growth. Particular attention shall be given to avoid applying more water than the soil can absorb at one time. Where more water is required than the soil is capable of taking at one time, Repeat water application as necessary.

928-10 MEASUREMENT AND PAYMENT

Measurement and payment for **Landscape Maintenance and Plant Establishment** shall be included in the unit price of **Landscaping and Irrigation,** and other appurtenant, no further payment will be made.

SECTION 929 GENERAL ELECTRICAL

929-1 WORK INCLUDED

The scope of work includes the installation of an emergency generator, a fire alarm system and an alerting dispatch system, telecommunication cable lines, light fixtures, and control panels shown on Sheet 93-111 of Drawing No. 2025-D-010. The entire diesel generator set will be purchased by the City and delivered to the site. The City will also obtain the from SCE to remove and relocate the on-site power pole. The Contractor must adhere to the general conditions and requirements outlined in the CSI specifications or shop drawings for the installation.

The CSI specifications applied to this section are listed below:

SECTION 013300 SUBMITTAL PROCEDURES

SECTION 017700 CLOSEOUT PROCEDURES

SECTION 260500 COMMON WORK RESULTS FOR ELECTRICAL

SECTION 260503 UTILITY COORDINATION

SECTION 260521 LOW VOLTAGE WIRE CONNECTIONS

SECTION 260526 GROUNDING AND BONDING

SECTION 260529 HANGERS AND SUPPORTS

SECTION 260533 CONDUITS

SECTION 260534 BOXES

SECTION 260553 IDENTIFICATION FOR ELECTRICAL SYSTEMS

SECTION 260573 ELECTRICAL POWER SYSTEM STUDIES

SECTION 260850 FIELD ELECTRICAL ACCEPTANCE TESTS

SECTION 262214 DRY-TYPE TRANSFORMERS

SECTION 262413 SWITCHBOARDS

SECTION 262416 PANELBOARDS

SECTION 262726 WIRING DEVICES

SECTION 262801 LOW VOLTAGE MOLDED CASE CIRCUIT BREAKERS

SECTION 263214 DIESEL GENERATOR SETS

SECTION 263624 AUTOMATIC TRANSFER SWITCHES

SECTION 264314 SURGE PROTECTIVE DEVICES

All materials and equipment shall be furnished and installed in support of all electrical work described in plans and specifications including but not limited to, generator, boxes, enclosures, feeders, branch circuiting, supports, terminal cabinets, sleeves, gutters, panels, transformers, switchgear, lighting fixtures, controls, relays, contactors, in order to complete and make fully functional the systems described.

Telephone Utility company site work as required by the serving companies. All utility company conduits, raceways, trenching, backfilling, utility vaults, equipment pads and substructures shall meet both the respective utility companies requirements as well as those of the authority having jurisdiction, whichever is more restrictive. In no case shall work be completed and covered without the written approval of the serving utility companies both on and off site.

Power and Lighting Distribution: Furnish and install all power and lighting distribution systems including but not limited to panels, feeders, branch circuits, devices, fixtures, disconnect switches, contactors, controls, etc. for a complete working system.

Lighting acceptance testing, documentation and completion forms are required to be fill out by the Contractor.

929-2 INSTALLATION

Contractor shall provide a full and accurate set of field record drawings m*arked up in a neat and understandable manner submitted to the City Engineer upon completion of the work and prior to issuance of a certificate of completion.*

Identification: Provide engraved laminated plastic nameplates for all switchboards, panelboards, fire alarm terminal cabinets, telephone and cable television backboards, main devices, control panels, time clocks, contactors and safety disconnect switches accurately identifying each device. Labels shall be attached to the equipment by means of screws or rivets. Self-adhering labels will not be acceptable.

Safety: The Electrical Contractor is responsible to maintain all equipment in a safe and responsible manner. Keep dead front equipment in place while equipment is energized. Conduct all construction operations in a safe manner for employees as well as other work persons or anyone visiting the job site. Provide barriers, flags, tape etc. The Contractor shall hold all parties harmless of negligent safety practices that may cause injury to others on or near the job site.

Guarantees: All equipment and labor shall be guaranteed and warranted free of defects, unless otherwise stated to be more restrictive, for a period of one year from the date of final acceptance by the City. A written

warranty shall be presented to the Engineer at the time of completion prior to final acceptance. Equipment deemed to be damaged, broken or failed should be repaired or replaced at no additional cost to the City. Materials or system requiring longer than a one-year warranty as described herein shall be separately warranted in separate letters of guarantee stating the duration of warranty.

Operating and Installation Manuals: Provide two copies each of all manuals, operating and installation instructions for equipment indicated in submittal packages. Instruct the City's representative as to the operation and location of all equipment necessary to allow them to operate the facility upon final acceptance. This instruction period shall be prearranged with the City's representative prior to occupancy of the facility.

Lighting Acceptance Testing: Provide two copies of lighting acceptance testing results and equipment operating manuals.

929-3 SYSTEM DESCRIPTION

Verify all power and communications utility company requirements prior to commencement of utility work. Make proper adjustments to the construction to satisfy the serving utility requirements if they differ from the construction documents. Discrepancies shall be brought immediately to the attention of the Engineer for clarification.

Extra charges imposed by the electric and communications utility companies shall be paid by the City directly to utility companies

929-4 DELIVERY, STORAGE AND HANDLING

Storage of equipment for the job is the responsibility of the Electrical Contractor and shall be scheduled for delivery to the site, as the equipment is required. Damage to the equipment delivered to the site or in transport to the job shall be the responsibility of the Electrical Contractor.

929-5 MATERIALS

Materials shall be new and bear the label of or be listed by a nationally recognized testing laboratory. The quality and suitability of all materials shall conform to the standards and practices of this trade.

929-6 SCHEDULE

Closely coordinate outage and facility disruption time with Architect and City. Minimum 72-hour notice is required before any circuit shutdown or disruption of facility personnel functioning.

The Contractor shall coordinate with Southern California Edison at the start of construction to facilitate a schedule with them to coordinate the work effort. The Contractor shall notify the City at the beginning of construction if any delays due to SCE’s work schedule are anticipated. The Contractor shall provide the City with a schedule of SCE work and the timeline for which it will be performed.

929-7 MEASUREMENT AND PAYMENT

Measurement and payment for **General Electrical** shall be made at the lump sum price stated in the Schedule of Work and Prices. General Electrical includes all electrical items indicated on the Plans except for lights, which are an additive bid item.

The above lump sum price shall include full compensation for furnishing all labor, materials, tools, equipment, transportation, and incidentals necessary for General Electrical in accordance with the Contract Documents.

SECTION 930 – RESTORATION OF DAMAGED EXISTING IMPROVEMENTS

930-1 SCOPE

The Contractor is responsible for recovering and repairing any existing structures affected by the construction. The two existing storm culverts that discharge on-site runoff must be cleaned from any vegetation and debris. The surrounding structures shall be repaired or replaced as needed. Additionally, all curbs, gutters, and sidewalks adjacent to the construction site must be repaired or replaced up to the next joint or scoring that extends beyond the damaged or broken sections. A concrete saw should be used to remove any damaged concrete and asphalt.

Furthermore, the off-site curbs of the proposed sidewalk on Alessandro Drive shall be included in the repair and replacement scope in accordance with the details on Sheet 6 of Drawing No. 2025-D-010.

930-2 MEASUREMENT AND PAYMENT

Measurement and payment for **Restoration Of Damaged Existing Improvements** shall be in a stipulated lump sum listed on the Schedule of Work and Prices.

SECTION 931 – PREFABRICATED BUILDINGS

931-1 GENERAL

The proposed fire station consists of three main buildings: the Apparatus Bay, Interim Office, and Gym. All these buildings are prefabricated units, which will be purchased by the city and delivered to the site. The contractor should focus on plumbing, mechanical, electrical work, and associated appurtenances as outlined in the special provisions provided in the subsections.

The 48"x60" Interim Office and 24"x40" Gym are supplied by:

Global Modular Inc.
1120 Commerce Ave, #25
Atwater, CA 95301
Contact: Dora Perez <dperez@gdvi.net>.

The 90"x72" Apparatus is supplied by:

ClearSpan Corporate
703 Hebron Ave. Floor 3
Glastonbury, CT 06033
Contact : Leo Melssen <lmelssen@farmtek.com>

931-1.2 Plumbing

The Interim Office and Gym will have interior plumbing installed by the vendor. The contractor is responsible for connecting the water and sewer to the building. Additionally, the Contractor will carry out plumbing work for the apparatus bay, as indicated on Sheet 82-85 in compliance with Sheet 125-128 of Drawing No. 2025-D-010. The plumbing details are outlined in the special provisions below:

- Section 220000 Plumbing
- Section 221113 Facility Water, Sewer and Storm Drain
- Section 223313 Electric Commercial Water Heater

931-1.2.1 Electric Commercial Water Heater

The contractor is responsible for purchasing and installing a 119-gallon electric water heater, model CAHP 120, manufactured by AO Smith or equivalent, in accordance with the product cut sheet and installation instructions. The installation work must comply with **Section 929, General Electrical**, and **Section 923, Structural Foundation**. See the special provision listed below:

Section 223336 Electric Commercial Water Heater

931-1.3 Fire Sprinkler

All the buildings shall install fire sprinkler system that meets the NFPA 13 requirements. The fire sprinkler details are outlined in the special provision below:

- Section 211113 Wet Pipe Fire Sprinkler System

931-1.4 MECHANICAL

The contractor shall install the vent and HVAC system for the apparatus bay and shall connect waste, vent and air, and HVAC for the Apparatus Bay compromise with ventilation done by the vendor for the interim office building. The mechanical work is outlined in the special provision listed below:

- Section 230000 Heating, Ventilating & Air Conditioning
- Section 230013 General Mechanical Requirement
- Section 232516 Straight Rail, Vehicle Exhaust Removal System

931-1.5 Fire Alarm System

The Contractor is responsible for purchasing and installing the fire smoke detectors, fire alarm panels, and alerting dispatch system in accordance

with the mechanical plans on the Sheet 63-63 of Drawing 2025-D-010.The technical specification of fire alarm panels is :

- Section 283111 Digital Addressable Fire Alarm System

931-1.6 Fire Alerting Dispatch System

The City will purchase the alerting dispatch system from USDD and deliver it to the site. The contractor requires a USDD-certified license for installation and system activation. Contractor shall notify the Engineer of the system communication with Ventura County Frie Department. The special provision listed below:

- Section 275000 Distributed Communication and Monitoring System

931-1.7 Telecommunications

The Contractor shall install the optic fiber conduits from Alessandro Drive to the modular building. The cable line inside the interim office and gym will be managed by the vendor. The special provisions of telecommunications are listed below:

- Section 078413 Penetration Firestopping
- Section 270526 Grounding and Bonding for Communication Systems
- Section 270544 Sleeve and Sleeve Seal For Communication Pathway and Cabling
- Section 270528 Pathway for Communication System
- Section 270536 Cable Traus for Communications Systems
- Section 271500 Communication Horizontal Cabling

931-1.8 Electrical

The vendor will install the interior conduit for the interim office and gym. The contractor is responsible for connecting the conduit from the generator to the vendor-installed panels, following **Section 929 General Electrical**. The contractor is also responsible for electrical connection at the apparatus bay as shown on Sheet 84 of Drawing 2025-D-010.

931-1.9 Seismic Expansion Joint

The wall and roof gaps between interim office and apparatus bay require installation of seismic expansion joints per detail shown on Sheet 18 of Drawing No. 2025-D-010 to minimize seismic movement. The contractor shall use the parts manufactured by Balco Inc. or an equivalent, in accordance with the special provisions outlined below:

- Section 079513 Expansion and Seismic Joint Cover

931-2 MEASUREMENT AND PAYMENT

Measurement and payment for Prefabricated Buildings shall be counted as lump sum for each subsection. All items involved in the plumbing,

mechanical and electrical connection must be completed to receive any compensation. The lump sum price shall include all labor, material tool and incidentals require to complete the construction.

931-2.1 MEASUREMENT AND PAYMENT

Measurement and payment for Electric Commercial Water Heater shall be counted as lump sum for each subsection. All items involved in the plumbing, mechanical and electrical connection must be completed to receive any compensation. The lump sum price shall include all labor, material tool and incidentals require to complete the construction.

SECTION 932 – TRASH ENCLOSURE

932-1 SCOPE

The contractor shall construct a trash enclosure at the south side of the property, which includes CMU block wall, steel posts, metallic sheet roof, concrete curb and apron as shown on Sheet 13 of Drawing No. 2025-D-010. The Contractor shall comprise with **Section 922 Rigid Concrete Pavement** to ensure the 180 SF concrete apron could meet design slope and thickness following City of Ventura's Trash Enclosure Guidelines 2020.

932-2 MEASUREMENT AND PAYMENT

Measurement and payment for **Trash Enclosure** shall be in a contract unit price per square feet listed on the Schedule of Work and Prices. The above contract unit price shall include full compensation for furnishing all labor, materials, tools, equipment, transportation, and incidentals for curb and gutter construction including base material and removal of existing curb, gutter, base material and subgrade in accordance with the Contract Documents.

SECTION 933 - TREE REMOVAL AND REPLACEMENT

933-1 SCOPE OF WORK

The scope of work includes the removal of existing trees on-site. The contractor is responsible for notifying the Engineer and the Department of Parks and Recreations, as well as for the removal, cleaning, and disposal of the trees. The contractor shall obtain a tree removal permit prior to prior to commencing field work and shall comply with Section 903 on Waste Diversion for tree disposals.

933-2 NOTIFICATION

a. The Contractor shall notify the City Inspector and the City Parks Division (Phone Number: 805-652-4550) 48 hours prior to beginning any work performed under this specification.

b. The Contractor shall notify all affected property owners, in writing, of the proposed construction, 48 hours prior to beginning any work. The notification may be in the form of a door hanger or flier.

The draft of the notice(s) shall be submitted to the City for approval ten (10) days after award of contract.

c. The notice shall provide a brief description of the project and the contractor's name, address and phone number whom a citizen may contact regarding the work.

933-3 TREE REMOVAL OUTLINE

Tree removal shall consist of the removing branches and stumps, together with roots that are still attached. All the removal trees are marked on Sheet 6 of Drawing No. 2025-D-010 that includes the trees adjacent to streetlight and on-site storm culvert. The root pruning works shall include the right-of-way, sidewalks, driveways, handicap ramps, and curb/gutter repairs. The contractor must keep a count of the total number of trees removed for the replanting.

933-3.1 Execution

a. The Contractor shall be responsible for the removal of any trees adjacent to repair, removal and/or replacement sites which, in the opinion of the City, require root loss that would mortally wound the tree, or result in destabilizing the tree to an unacceptable level. Removal of trees shall be per current ANSI Standards.

b. Where a tree to be removed in close proximity to an overhead utility line or guy line, extreme caution shall be taken to avoid damage to these lines. Any damage that does occur shall be promptly reported to the City Police Department, and to the utility company that is involved. The cost of repair of the damage will be at the Contractor's expense.

c. If damage occurs to any adjacent shrubs or trees that are to remain, immediate treatment or necessary replacement of same type of shrubs shall be carried out under the direction of the City at the Contractor's expense.

d. Tree removal will include the removal of the tree stump and large roots, (those with a diameter larger than one inch) to the minimum depth of 24" from top of curb. Stump grindings will be removed and the replaced with topsoil to grade.

933-3.2 Replanting

The contractor shall prepare 24-inch-wide tree boxes for the tree replacement and plant them in the locations designated by the Urban Forestry Division. Please contact the Parks and Recreations personnel below for the planting locations:

Andy Torrez, Urban Forestry Supervisor

Telephone: (805)-652-4540

Email: atorrez@cityofventura.ca.gov

933-4 MEASUREMENT AND PAYMENT

Measurement and payment for **Tree Removal and Replacement** shall be made at a lump sum price as listed in the Schedule of Work and Prices. This contract price fully compensates for all labor, tools, equipment, transportation, and other related expenses necessary to complete all work outlined in this section. The work must be done in accordance with the plans and the specifications detailed in these Special Provisions.

SECTION 934 – RECORD OF CONSTRUCTION CHANGES

934-1 GENERAL

The Contractor shall maintain a complete and accurate record of all changes of construction from that shown in these plans and specifications for providing a basis for construction record drawings.

The purpose of record drawings is to provide factual information regarding all aspects of the work, both concealed and visible, to enable future modifications of the work to proceed without lengthy and expensive site measurement, investigation, and examination.

934-2 RECORDING

The Contractor shall use a job set of contract drawings, clearly labeled “Record Drawings,” to record all changes in construction. The Record Drawings shall be kept up-to-date daily as the job progresses and shall be available for inspection at all times.

The Contractor shall not conceal any work until required information is recorded. Completely, accurately, and legibly record, to the satisfaction of the Engineer, all deviations in construction, especially pipe and conduit locations, and any deviations caused by approved changes and/or clarifications to the work.

Use additional copies of prints, if necessary, to insure legible recording of data and date all entries. Call attention to the entry by drawing a “cloud” around the area affected. In case of overlapping changes, use different colors for each change.

Legibly mark the job set of record drawings in red ink to document actual construction:

1. Depths of various elements of foundation in relation to finish structural slabs or decks.

2. Horizontal and vertical locations of underground utilities and appurtenances referenced to permanent surface improvements.

3. Locations of internal utilities and appurtenances concealed in the construction, referenced to visible and accessible features of the structure.

4. Changes made reflecting approved changes to the work.

5. Details not on original contract drawings.

934-3 CONVERSION OF SCHEMATIC LAYOUTS

In some cases on the drawings, arrangements of conduits, circuits, piping, ducts, and similar items are shown schematically and are not intended to portray precise physical layout. The final physical arrangement is determined by the Contractor, subject to the approval of the Engineer, and shall be accurately recorded by the Contractor on the construction record drawings.

Show on the job set of record drawings, by dimension accurate to one-inch, the centerline of each run of all piping, conducts, and ducts not otherwise located by Design Details.

1. Clearly identify the item by accurate note such as “PVC drain,” or “30-inch Effluent Line,” etc.

2. Show by symbol or note the vertical location of the item (“6 inches below slab,” “exposed,” etc.)

3. Make all identification sufficiently descriptive that it may be related reliably to the Specifications.

934-4 SUBMITTALS

The Contractor shall submit a complete set of record drawings to the Engineer 10-days after final inspection along with a letter which declares that other than these noted changes, “the Project was constructed in conformance with the Contract Documents.”

934-5 MEASUREMENT AND PAYMENT

Measurement and payment for **Recording of Construction Changes** shall be a stipulated lump sum price bid. Recording construction changes shall be a non-prorated item. All items involved in the recording of construction changes must be completed to receive any compensation. The stipulated lump sum price for recording of construction changes shall include all labor, material, tools, and incidentals required to complete the recording of construction changes in accordance with the Contract Documents.

TECHNICAL SPECIFICTION

TABLE OF CONTENTS

- Structural Foundation

Section 031000 Structural Cast-In-Place Concrete Formwork

Section 032000 Concrete Reinforcement

Section 033000 Cast-In-Place Concrete

Structural Foundation

- Seismic Details

Section 079513 Expansion and Seismic Joint Cover

- Plumbing

Section 211313 Wet-Pipe Fire Sprinkler System

Section 220000 Plumbing

Section 221113 Facility Water Sewer And Storm Water Service Piping

Section 221323 Sewer Clarifier

Section 223313 Electric Commercial Water Heater

- Mechanical

Section 230000 Heating, Ventilating, And Air Conditioning

Section 230013 General Mechanical Requirements

Section 232516 Straight Rail Vehicle Exhaust Removal System

- Communications

Section 078413 Penetration Firestopping

Section 270528 Pathways For Communications Systems

Section 270526 Grounding And Bonding For Communications Systems

Section 270536 Cable Trays For Communications Systems

Section 271500 Communications Horizontal Cablings

Section 270544 Sleeves And Sleeve Seals For Communications Pathways And Cabling

- Fire Alarm System

Section 283111 - Digital, Addressable Fire-Alarm System

- Fire Alerting Dispatching System

Section 284000 Electronic Monitoring And Control

City of Ventura – Interim Fire Station 7

Project No. 2025-010

The Special Provisions contained herein have been prepared by or under the direction of the following Registered Persons:

CIVIL

Ling Liu

_____ 04-24-26

Ling Liu, Registered Civil Engineer

City of Ventura – Interim Fire Station 7

Project No. 2025-010

The Special Provisions contained herein have been prepared by or under the direction of the following Registered Persons:

MECHANCIAL AND PLUMBING

_____ 04-24-26

Brian P. Starrett, Registered Mechanical Engineer
3C Engineering, An EMCOR Company

City of Ventura – Interim Fire Station 7

Project No. 2025-010

The Special Provisions contained herein have been prepared by or under the direction of the following Registered Persons:

ELECTRICAL

_____ 04-24-26

Dinesh B Peeramsetty, Registered Electrical Engineer
Cannon

City of Ventura – Interim Fire Station 7

Project No. 2025-010

The Special Provisions contained herein have been prepared by or under the direction of the following Registered Persons:

FIRE PROTECTION

_____ 04-24-26

D. Ted Edelmann, Registered Fire Protection Engineer
Collings & Associates

City of Ventura – Interim Fire Station 7

Project No. 2025-010

The Special Provisions contained herein have been prepared by or under the direction of the following Registered Persons:

LANDSCAPE ARCHITECTURE

_____ 04-24-26

Roberto Leo, Registered Landscape Architect
Design Studios Landscape Development

City of Ventura – Interim Fire Station 7

Project No. 2025-010

The Special Provisions contained herein have been prepared by or under the direction of the following Registered Persons:

GEOTECHNICAL

_____ 04-24-26

Anthony P. Mazzei, Registered Geotechnical Engineer
Earth Systems Pacific

City of Ventura – Interim Fire Station 7

Project No. 2025-010

The Special Provisions contained herein have been prepared by or under the direction of the following Registered Persons:

STRUCTURES

_____ 04-27-26

Rodrigo A. Toro Pavez, SE, DBIA, ENV SP
KPFF

SECTION 03 11 00

STRUCTURAL CAST-IN-PLACE CONCRETE FORMWORK

PART 1 - GENERAL

1.01 SUMMARY

A. Section Includes:

1. Design and construction of formwork for concrete, unless specified otherwise.

2. Setting in forms, all anchor bolts, metal inserts, sleeves, etc., embedded in concrete.

3. Miscellaneous concrete work, including but not limited to areaways, cast-in-place valve boxes, pits, splash blocks, equipment bases, and other items as shown or required to complete all Work.

B. Related Sections:

1. TS Division 3, Section 03 20 00, “CONCRETE REINFORCEMENT”

2. TS Division 3, Section 03 30 00, “CAST-IN-PLACE CONCRETE”

1.02 SUBMITTALS

A. Shop Drawings: Submit shop drawings showing form pattern layouts of all exposed exterior and interior concrete dimensioned to precisely locate grooves, form panel jointing, tie hole layout and spacing, and similar features. Review and approval will not include form strength and adequacy.

B. Record Document: Keep an accurate record of the dates of removal of forms, form shores and reshores, and furnish copies to the Engineer.

1.03 QUALITY ASSURANCE

A. Construct forms according to ACI 347 "Recommended Practice for Concrete Formwork", and conforming to tolerances specified in ACI 301, "Specifications for Structural Concrete for Buildings," as applicable, unless exceeded by code requirements or otherwise indicated or specified.

B. Prior to construction of formwork for concrete beams and slabs above grade, Contractor shall conduct a meeting at the site to determine and define all cambers required for the project. The Engineer, Structural Engineer of record, Contractor and Contractor's formwork installer shall be in attendance at this meeting.

C. Conduct Preinstallation Conference at the Project site.

1.04 DELIVERY, STORAGE, AND HANDLING

A. Deliver materials for forms in a timely manner to ensure uninterrupted progress.

B. Store materials by methods that prevent damage and permit ready access for inspection and identification.

PART 2 - PRODUCTS

2.01 MATERIALS

A. Form lumber: Unless otherwise indicated or specified, use WCLIB "Construction" grade or better, WWPA No. 1 or better, unless otherwise indicated or specified.

B. Form plywood: Unless otherwise indicated or specified, use PS 1-83, Group I, Exterior Grade B-B Plyform or better, minimum 5-ply and 3/4 inch thick for exposed locations and not less than 5/8 inch thick for unexposed locations, grade marked, not mill oiled, Plywood having medium or high-density overlay is acceptable.

C. Coated form plywood: For exposed painted concrete, plastic overlaid plywood of grade specified above, factory coated with a form coating and release agent equal to "Noxcrete.", unless otherwise indicated or specified.

D. Tube forms: Burke "SmoothTube," Sonoco "Seamless Sonotubes," Alton Building Products "Sleek Seamless Standard Wall," or equal, type leaving no marks in concrete, 1-piece lengths for full required heights.

E. Joist forms: Approved steel or molded plastic types as required.

F. Form ties: Prefabricated rod, flat band, wire, internally threaded disconnecting type, or equal, not leaving metal within 1-1/2 inch of concrete surface.

G. Form coating: Non-staining clear coating free from oil, silicone, wax, not grain-raising, "Formshield" by A.C. Horn, Inc., "Debond Form Coating" by L&M Construction Chemicals, Inc., or "Cast-Off" by Sonneborn Building Products. Where form liners are used, provide form coatings recommended by form liner manufacturer.

PART 3 - EXECUTION

3.01 WORKMANSHIP

A. Rigidly construct forms to prevent cement paste leakage, sagging, displacement or bulging between studs. Use clean, sound, approved form material, coated with specified materials only, not oil. Provide backing on all plywood joints.

B. Sides of all pile caps, footings and grade beams shall be formed, unless permission is obtained to place concrete directly against earth. Where this permission is granted, the footing or grade beam dimension shall be increased 3 inches. Remove formwork prior to backfilling operations.

3.02 FORM ERECTION AND REMOVAL

A. Conform to ACI 301 and ACI 347 except as exceeded by the requirements of the Code, regulatory agencies, or herein.

B. Construction: Coat forms with the specified resin coating, not form oil. Construct forms to exact shapes, sizes, lines, and dimensions required to obtain level, plumb, and straight surfaces. Provide openings, offsets, keys, reglets, anchorages, recesses, moldings, chamfers, blocking, screeds, drips, bulkheads, and all other required features. Make forms easily removable without hammering or prying against concrete. Space forms apart with metal spreaders. Construct forms to accurate alignment, location and grades, and provide against sagging, leakage of cement paste, or displacement occurring during and after placing of concrete. Coordinate installation of inserts and anchors in forms according to Shop Drawings and requirements for work of other sections.

C. Camber: Place suitable jacks, wedges, or similar means to induce camber and to correct settlement in forms before and during concrete placing. Camber shall be as determined in pre-installation meeting specified above. In general, formwork shall be capable of accommodating camber of 1/8 inch per 10 feet of span plus 1/4 inches.

D. Corners and Angles: Provide 3/4 inch by 3/4 inch beveled chamfer strips for all exposed concrete corners and angles, unless otherwise indicated. Form concealed concrete corners and angles square, unless otherwise indicated.

E. Reglets and Rebates: Form required reglets and rebates to receive frames, flashing, and other equipment. Obtain required dimensions, details, and precise positions for work to be installed under other sections and form concrete accordingly.

F. Form Joints: Unless otherwise indicated or specified, fill joints to produce smooth surfaces, intersections, and arrises. Use polymer foam or equivalent fillers at joints and where forms abut or overlap existing concrete to prevent leakage of cement paste.

G. Recesses, Drips, and Profiles: Provide smooth milled wood or preformed rubber or plastic shapes of types shown and required.

H. Cleanouts and Cleaning: Provide temporary openings in all wall forms and other vertical forms for cleaning and inspection. Clean forms and surfaces to receive concrete prior to placing.

I. Re-Use: Clean and recondition form material before re-use, unless more stringent requirements are indicated or specified.

J. Form Removal: All formwork removal is made at contractor's own risk. Do not remove concrete forms until concrete attains sufficient strength to support its own weight and all superimposed loads as determined by testing field cured concrete cylinders, but not sooner than specified in ACI 347, paragraph 3.6.2.3, or as indicated or specified elsewhere. Load supporting forms may not be removed before the concrete has attained 75 percent of required 28-day compressive strength, and no sooner than 7 days provided construction is reshored.

1. Reshore structural members as specified below because of design requirements or construction conditions to permit successive construction.

2. Remove formwork progressively so unbalanced loads are not imposed on the structure.

3. Avoid damage to concrete surfaces during form removal.

4. Store reusable forms for exposed architectural concrete to prevent damage to contact surfaces.

5. Remove formwork in same sequence as concrete placement to achieve similar concrete surface coloration.

3.03 FORMWORK TOLERANCES

A. Deflection: Limit deflection of forming surfaces from concrete pressure to L/240, unless otherwise indicated or specified.

B. Finish Lines: Position formwork to maintain hardened concrete finish lines within following permissible deviations, unless otherwise indicated or specified:

1. Variation from Plumb:

a. In 10 feet: 1/4 inch

b. In any story or 20 feet: 3/8 inch

c. In 40 feet or more: 3/4 inch

2. Variation from Level or Grades Indicated:

a. In 10 feet: 1/4 inch

b. In any bay or 20 feet maximum: 3/8 inch

c. In 40 feet or more: 3/4 inch

3. Cross-Sectional Dimensions:

    a. Minus 1/4 inch

    b. Plus 1/2 inch

C. Building Lines: Variation of linear building lines from established position in plan and related position of columns, walls and partitions:

1. In any bay or 10 feet maximum: 1/2 inch

2. In 40 feet or more: 1 inch

D. Slab Openings: Variations in size and location of sleeves and slab openings shall not exceed 1/4 inch.

3.04 SURVEY AND ADJUSTMENT

A. Check forms before and during placement of concrete, using an instrument, and make corrections as work proceeds.

3.05 EMBEDDED PIPING AND ROUGH HARDWARE

A. Where work of other sections requires openings for passage of pipes, conduits, ducts, and other inserts in the concrete, obtain all dimensions and other information. All necessary pipe sleeves, anchors, or other required inserts shall be accurately installed as part of the work of other sections, according to following requirements.

B. Conducts or Pipes: No pipes shall be embedded in concrete. Locate conduits so as not to reduce strength of concrete. In no case place conduits in a slab 5 inches thick or less. Conduit buried in a concrete slab shall not have an outside diameter greater than 1/4 the slab thickness nor be placed below the bottom reinforcing steel or over top reinforcing steel of the slab.

C. Sleeves: Pipe sleeves may pass through slabs or walls if not exposed to rusting or other deterioration and are of uncoated or galvanized iron or steel. Provide sleeves of diameter large enough to pass any hub or coupling on pipe, including any insulation.

D. Conduits: Conduits may be embedded in walls only if the outside diameter does not exceed 1/4 the wall thickness, are spaced no closer than 3 diameters on centers, and do not impair the strength of the structure.

3.06 FIELD QUALITY CONTROL

A. Inspection: Obtain inspection and approval of forms before placing structural concrete.

END OF SECTION

SECTION 03 20 00

CONCRETE REINFORCEMENT

PART 1 - GENERAL

1.01 SUMMARY

A. Section Includes:

1. Reinforcing bars for cast-in-place concrete.

2. Reinforcing mesh for cast-in-place concrete.

3. Accessories, including but not limited to, chairs and tie wires.

4. Miscellaneous concrete work, including but not limited to areaways, cast-in-place valve boxes, pits, splash blocks, equipment bases, and other items as shown or required to complete all Work.

B. Related Sections:

1. Section 03 10 00 “STRUCTURAL CAST-IN-PLACE CONCRETE FORMWORK.”

2. Section 03 30 00 “CAST-IN-PLACE CONCRETE.”

1.02 SUBMITTALS

A. Shop Drawings: Submit for review and approval by the Engineer prior to fabrication. Shop drawings to include complete layouts, sections, and details for congested conditions, typical bending diagrams and offsets, splice lengths and locations, proposed layout where vertical and horizontal bars intersect, locations of form ties for architectural concrete, and wherever welding is proposed, detailed to conform to AWS-D1.4 and code requirements.

1. Submit proposed coupler and proposed location. Supply manufacturer's calculations and supporting data.

B. Mill test reports: Submit prior to placement of concrete.

C. Welding Certificates: Submit certificates of certified welders.

D. Product Data: Chemical analysis for bars to be welded, in accordance with code.

1.03 QUALITY ASSURANCE

A. Source Quality Control: Testing Laboratory shall perform following conformance testing, shall select test samples of bars, ties, and stirrups from the material at the site or from place of distribution, each sampling including at least two 18-inch long pieces, and perform the following tests in accordance with applicable ASTM requirements:

1. Identified Bars: If samples are obtained from bundles as delivered from the mill, identified as to heat number, accompanied by mill analyses and mill test reports, and properly tagged with Identification Certificate so as to be readily identified, perform one tensile and one bend test for each 10 tons or fraction thereof of each size of bars. Submit mill reports when samples are selected.

2. Unidentified Bars: When positive identification of reinforcing bars cannot be made and when random samples are obtained, perform tests for each 2.5 tons or fraction thereof, one tensile and one bend test from each size of bars.

B. Certification of Welders: All welding both in shop and in field shall be performed by certified welders. No welding of reinforcement shall be allowed unless specifically approved by the Engineer.

C. Conduct Preinstallation Conference at the Project site.

1.04 DELIVERY, STORAGE AND HANDLING

A. Bundle bars, tag with identification, and transport and store so as not to damage any material. Use metal tags indicating size, length and other marking shown on placement drawings. Maintain tags after bundles are broken.

1.05 COORDINATION

A. Coordinate vertical and horizontal placement of reinforcing bars, splices, and chairs in architectural concrete with formwork tie locations indicated on Drawings and approved shop drawings for architectural concrete.

PART 2 - PRODUCTS

2.01 MATERIALS

A. Recycled Content of Steel Products: Provide products with an average recycled content of steel products of at least 70 percent post-consumer recycled content plus 15 percent pre-consumer recycled content.

B. Reinforcing bars: ASTM A706, Grade 60, unless otherwise indicated on drawings.

C. High Strength Reinforcing Bars: ASTM A1035 low-carbon, chromium steel bars, 100 ksi minimum yield strength.

D. Reinforcing mesh: ASTM A185, mesh size and gauge as shown, 60 ksi minimum tensile strength. Provide mesh in flat sheets only.

E. Tie wire: ASTM A82, Annealed copper-bearing steel, 16 gauge minimum.

F. Chairs and similar support items:

1. Standard manufactured products conforming to CRSI Manual of Standard Practice.

2. Use dense precast concrete supports with embedded wire ties for reinforcement placed on grade. Elsewhere, use wire bar supports.

G. Welding electrodes: AWS D1.4, Table 5.1 and 5.5 low hydrogen electrodes, E9018 for Grade 60 steel.

2.02 FABRICATION OF REINFORCING BARS

A. Comply with CRSI "Manual of Standard Practice for Reinforced Concrete Construction" for fabrication of reinforcing steel.

B. Bending and Forming: Fabricate bars of the indicated sizes and bend and form to required shapes and lengths by methods not injurious to materials. Do not heat reinforcement for bending. Bend bars No. 6 size and larger in the shop only. Bars with unscheduled kinks or bends are subject to rejection. Use only tested and approved bar materials.

C. Welding: Use only ASTM A 706 steel where welding is proposed. Perform welding, where shown or approved, by the direct electric arc process in accordance with AWS D1.4 using specified low-hydrogen electrodes. Preheat 6 inches each side of joint. Protect joints from drafts during the cooling process; accelerated cooling is prohibited. Do not tack weld bars. Clean metal surfaces to be welded of all loose scale and foreign material. Clean welds each time electrode is changed and chip burned edges before placing welds. When wire brushed, the completed welds must exhibit uniform section, smooth welded metal, feather edges without undercuts or overlays, freedom from porosity and clinkers, and good fusion and penetration into the base metal. Cut out welds or parts of welds found defective with chisel and replace with proper welding. Prequalification of welds shall be in accordance with Code.

PART 3 - EXECUTION

3.01 INSTALLATION OF REINFORCING

A. Provide additional reinforcing bars at wall and slab openings as required. Before placing bars, and again before concrete is placed, clean bars of loose mill scale, oil, or any other coating that might destroy or reduce bond.

B. Securing in Place: Accurately place bars and wire tie in precise position where bars cross. Bend ends of wire ties away from the forms. Wire tie bars to corners of ties and stirrups. Support bars according to the current edition of "Recommended Practice for Placing Bar Supports" of Concrete Reinforcing Steel Institute, using approved

accessories and chairs. Place precast concrete cubes with embedded wire ties to support reinforcing steel bars in concrete placed on grade and in footings. Use care not to damage vapor retarders where they occur.

C. Exposed Concrete Surfaces: Provide stainless steel or exterior quality vinyl plastic tipped chairs, bolsters, and accessories where exposed on exterior or interior concrete surfaces not to be painted or permanently covered.

D. Clearances: Maintain minimum clear distances between reinforcing bars and face of concrete as indicated or directed.

E. Splices: Do not splice reinforcing bars at the points of maximum stress except where indicated. Lap splices as shown or required to develop the full strength or stress of bars. Stagger splices in horizontal wall bars at least 48 inches longitudinally in alternate bars and opposite faces.

F. Field Welding of Bars: As specified for fabrication.

G. Maintaining Bars In Position: Take adequate precautions to assure that reinforcing position and spacing is maintained during placement of concrete.

H. Reinforcing Mesh: Lap splice shall include 3 cross-wires but not less than 12 inches. Wire tie at splices and support the same as specified for bars.

I. Splice Devices:

1. Install in accordance with manufacturer's written instructions in locations approved on shop drawings.

2. Splice in a manner developing at least 125 percent of the yielding strength of the bar.

3.02 FIELD QUALITY CONTROL

A. Inspection: Obtain inspection and approval of reinforcing before concrete is placed.

B. Welding Inspection. Whether welding is done in the shop or at the site, perform welding of reinforcing bars under inspection by certified welding inspector.

END OF SECTION

SECTION 03 30 00
CAST-IN-PLACE CONCRETE

PART 1 - GENERAL

1.01 SUMMARY

A. Section Includes:

1. Cast-in place concrete, including furnishing, concrete materials, mix design, placement procedures, curing, and finishes, except as otherwise specified.

2. Grout, except as otherwise specified.

3. Placing of embedded anchor bolts, inserts, and smooth dowels.

4. Miscellaneous concrete work.

B. Related Sections:

1. Section 03 10 00 “STRUCTURAL CAST-IN-PLACE CONCRETE FORMWORK”

2. Section 03 20 00 “CONCRETE REINFORCEMENT”

1.02 DEFINITIONS

A. Cementitious Materials: Portland cement alone or in combination with one or more of blended hydraulic cement, fly ash and other pozzolans, ground granulated blast-furnace slag, and silica fume.

1.03 SUBMITTALS

A. Product Data: For each type of manufactured material and product including but not limited to the following:

1. Admixtures.

2. Curing compounds.

3. Floor and slab treatments.

4. Semirigid joint fillers.

5. Joint-filler strips.

6. Bonding agent.

7. Non-shrink grout.

B. Name and address of the proposed concrete supplier.

C. Shop Drawings: Submit shop drawings for all horizontal and vertical concrete showing dimensioned locations of all construction control and expansion joints, and pour sequencing. Show details for constructing construction and expansion joints, and method of keying.

D. Design Mixes: For each concrete mix. Include alternate mix designs when characteristics of materials, project conditions, weather, test results, or other circumstances that may warrant adjustments.

E. Delivery Tickets: With each transit truck, provide delivery ticket, signed by an authorized representative of the batch plant, containing all information required by ASTM C94, as well as time batched, type of brand of cement, cement content, maximum size of aggregate and total water content.

1.04 QUALITY ASSURANCE

A. Installer Qualifications: An experience installer who has completed concrete Work similar in material, design, and extent to that indicated for this Project and whose work has resulted in construction with a record of successful in-service performance.

B. Manufacturer Qualifications: A firm experienced in manufacturing ready-mixed concrete products complying with ASTM C 94 requirements for production facilities and equipment. Manufacturer must be certified according to the National Ready Mixed Concrete Association's Certification of Ready Mixed Concrete Production Facilities.

C. Concrete Testing and Inspection Services: The City will engage a qualified independent testing agency to perform evaluation tests and special inspections per Structural Notes on Drawings and as required by the Code. Personnel conducting field tests shall be qualified as ACI Concrete Field Testing Technician, Grade 1, according to ACI CP-1 or an equivalent certification program.

D. ACI Publications: Comply with the following, unless more stringent provisions are indicated:

1. ACI 301, "Specification for Structural Concrete."

2. ACI 117, "Specifications for Tolerances for Concrete Construction and Materials."

E. Mockups: Cast concrete slabs-on-grade mockup to demonstrate typical joints, surface finish, texture, tolerances, and standard of workmanship.

1. Build mockups approximately 200 sq. ft. in the location indicated or, if not indicated, as directed by Engineer.

2. Notify Engineer seven days in advance of dates and times when mockups will be constructed.

3. Obtain Engineer's approval of mockups before starting construction.

4. If Engineer determines that mockups do not meet requirements, demolish and remove them from the site and cast another until the mockup is approved.

5. Maintain mockups during construction in an undisturbed condition as a standard for judging the completed Work.

6. Demolish and remove mockups when directed.

7. Approved mockups may become part of the completed Work.

F. Conduct Preinstallation Conference at the Project site.

1.05 DELIVERY, STORAGE, AND HANDLING

A. Deliver, store, and handle all material to prevent damage.

B. Ready-mixed concrete shall be placed in its final position within 1 ½ hours after water is first added to the mixture.

C. Mix concrete only in such quantities as are required for immediate use, and use while fresh before initial set has taken place. Concrete which has developed initial set shall not be used. Concrete which has partially hardened shall not be retempered or remixed.

D. Use all means necessary to protect cast-in-place concrete materials before, during, and after installation and to protect the installed work and material of all other trades.

E. In the event of damage, immediately make all repairs and replacement necessary to the approval of the Engineer and at no cost to the City.

PART 2 - PRODUCTS

2.01 CONCRETE MATERIALS

A. Portland Cement: ASTM C 150, Type II – Low Alkali from one approved source.

B. Fly Ash: ASTM C 618, Class F; except residue retained on the 45 µm (No 325) sieve shall not exceed 27 percent and the maximum loss on ignition shall not exceed 1.0 percent.

C. Normal-Weight Aggregate: ASTM C 33, uniformly graded, and as follows:

1. Nominal maximum Aggregate Size: 3/4 inch, except maximum 1-1/2 inch size for foundations.

2. Not exceeding 3/4 of minimum clear space between bars and forms, nor larger than 1/5 of the least dimensions between the forms.

3. 3/8 inch maximum aggregate size may be used in congested areas and in thin sections when approved by the Engineer.

D. Water: Potable and complying with ASTM C 94.

2.02 ADMIXTURES

A. General: Admixtures certified by manufacturer to contain not more than 0.1 percent water-soluble chloride ions by mass of cementitious material and to be compatible with other admixtures and cementitious materials. Do not use admixtures containing calcium chloride. All admixtures are subject to Engineer's approval.

B. Air-Entraining Admixture: ASTM C 260.

C. Water-Reducing Admixture: ASTM C 494, types A & D or F & G.

D. Retarding Admixture: ASTM C 494/C 494M, Type B.

E. Chemical admixtures shall be added to the concrete during the mixing process by automatic mechanical dispensing units. These dispensers shall be calibrated periodically to insure accuracy. On site plasticizing admixtures shall be added in accordance with manufacturer's instructions and/or recommendations.

2.03 CURING MATERIALS

A. General: Provide concrete curing, and curing and sealing compounds complying with South Coast AQMD for limitation of VOC content.

1. Where access flooring is indicated, coordinate selection of curing and sealing compounds with access floor manufacturer to verify product is compatible with pedestal adhesive.

B. Clear, Waterborne, Membrane-Forming Curing Compound: ASTM C 309, Type 1, Class B.

C. Clear, Waterborne, Membrane-Forming Curing and Sealing Compound: ASTM C 1315, Type 1, Class A.

D. Water: Potable.

2.04 NON-SHRINK GROUT

A. General: Conform to Corps of Engineers CRD-C 621, and as follows:

1. Non-metallic: Master Builders "Masterflow 928", or Euclid "Euco Hi-Flow Grout", or equal, non-gas-forming and free of oxidizing catalysts and inorganic accelerators, used as dry or damp pack, or mixed to a 20-second flow (CRC-C 621), without segregation or bleeding at any temperature between 45 degrees F and 100 degrees F. Working time 30 minutes or more.

2. Epoxy grout where indicated: Multi-component, premeasured, fast-curing combination of thermosetting resins and inert fillers, Master Builders "Ceilcote 648", Sikadur 42 Industrial Group-Pak by Sika Chemical Corporation, or Euclid "Euco High Strength Grout", or approved equal.

2.05 RELATED MATERIALS

A. Joint-Filler Strips: ASTM D 1751, asphalt-saturated cellulosic fiber, or ASTM D 1752, cork or self-expanding cork.

B. Epoxy Joint Filler: Two-component, semirigid, 100 percent solids, epoxy resin with a Shore A hardness of 80 per ASTM D 2240.

C. Bonding Agent: ASTM C 1059, Type II, non-redispersible, acrylic emulsion or styrene butadiene.

D. Epoxy-Bonding Adhesive: ASTM C 881, two-component epoxy resin, capable of humid curing and bonding to damp surfaces, of class and grade to suit requirements, and as follows:

1. Type: Class II, non-load bearing, for bonding freshly mixed concrete to hardened concrete.

E. Smooth Dowel Bars: Grade 60, plain round steel bars, conforming to ASTM A615. Dowel bars shall be free of burrs or other deromations that may cause locking of the joint. A minimum of two thirds of the length of the dowel bar shall be painted with zinc chromate, or be provided with a plastic sleeve. Dowels for expansion joints shall be provided with a suitable dowel cap permitting 1-1/4-inch of movement.

2.06 REPAIR MATERIALS

A. Repair Underlayment: Cement-based, polymer-modified, self-leveling product that can be applied in thicknesses from 1/8 inch and that can be feathered at edges to match adjacent floor elevations.

1. Cement Binder: ASTM C 150, portland cement or hydraulic or blended hydraulic cement as defined in ASTM C 219.

2. Primer: Product of underlayment manufacturer recommended for substrate, conditions, and application.

3. Aggregate: Well-graded, washed gravel, 1/8 to 1/4 inch or coarse sand as recommended by underlayment manufacturer.

4. Compressive Strength: Not less than 5000 psi at 28 days when tested according to ASTM C 109/C 109M.

B. Repair Topping: Traffic-bearing, cement-based, polymer-modified, self-leveling product that can be applied in thicknesses from 1/4 inch.

1. Cement Binder: ASTM C 150, portland cement or hydraulic or blended hydraulic cement as defined in ASTM C 219.

2. Primer: Product of topping manufacturer recommended for substrate, conditions, and application.

3. Aggregate: Well-graded, washed gravel, 1/8 to 1/4 inch or coarse sand as recommended by topping manufacturer.

4. Compressive Strength: Not less than 6000 psi at 28 days when tested according to ASTM C 109/C 109M.

C. Repair Vertical Surfaces: Use Cement-based repair mortar or fresh concrete, and as approved by the Engineer.

1. Cement Binder: ASTM C 150, portland cement or hydraulic or blended hydraulic cement as defined in ASTM C 219.

2. Primer: Product of mortar manufacturer recommended for substrate, conditions, and application.

3. Aggregate: Well-graded, washed gravel, 1/8 to 3/8 inch or coarse sand as recommended by repair mortar manufacturer.

4. Compressive Strength: Not less than 7000 psi at 28 days when tested according to ASTM C 109/C 109M.

2.07 CONCRETE MIXES

A. Concrete mixes shall be in accordance with this section UNO on the Drawings.

B. Mix shall be signed and sealed by a California-licensed professional engineer. Prepare design mixes for each type and strength of concrete determined by either laboratory trial mix or field test data bases, as follows:

1. Proportion normal-weight concrete according to CBC Section 1905, ACI 211.1, and ACI 301.

2. Proportion lightweight structural concrete according to CBC Section 1905, ACI 211.2, and ACI 301.

C. Strength of Concrete: Strengths and types of concretes shall be as indicated in the Drawings.

D. Fly Ash: Provide the following percentages, by weight, of fly ash unless approved otherwise by the Engineer:

1. Foundations: 30 percent.

E. Maximum Water-Cementitious Materials Ratio: 0.45 for all concrete unless specified or noted otherwise on the drawings.

F. Air Content: Add air-entraining admixture at manufacturer's prescribed rate to result in concrete having an air content of 5 percent, plus or minus 1.5 percent at point of delivery.

G. Do not air entrain concrete to trowel-finished interior floors and suspended slabs. Do not allow entrapped air content to exceed 3 percent.

H. Limit water-soluble, chloride-ion content in hardened concrete to 0.15 percent by weight of cement.

I. Admixtures: Use admixtures according to manufacturer's written instructions.

1. Use water-reducing admixture or high-range water-reducing admixture (superplasticizer) in concrete, as required, for placement and workability.

2. Use water-reducing and retarding admixture when required by high temperatures, low humidity, or other adverse placement conditions.

3. Use water-reducing admixture in pumped concrete, concrete for heavy-use industrial slabs and parking structure slabs, concrete required to be watertight, and concrete with a water-cementitious materials ratio below 0.50.

4. Use corrosion-inhibiting admixture in concrete mixes where indicated.

2.08 CONCRETE MIXING

A. Ready-Mixed Concrete: Measure, batch, mix, and deliver concrete according to ASTM C 94, and furnish batch ticket information.

B. Project-Site Mixing: Measure, batch, and mix concrete materials and concrete according to ASTM C 94. Mix concrete materials in appropriate drum-type batch machine mixer.

1. For mixer capacity of 1 cu. yd. or smaller, continue mixing at least one and one-half minutes, but not more than five minutes after ingredients are in mixer, before any part of batch is released.

2. For mixer capacity larger than 1 cu. yd., increase mixing time by 15 seconds for each additional 1 cu. yd.

3. Provide batch ticket for each batch discharged and used in the Work, indicating Project identification name and number, date, mix type, mix time, quantity, and amount of water added. Record approximate location of final deposit in structure.

PART 3 - EXECUTION

3.01 EMBEDDED ITEMS

A. Place and secure anchorage devices and other embedded items required for adjoining work that is attached to or supported by cast-in-place concrete. Use Setting Drawings, templates, diagrams, instructions, and directions furnished with items to be embedded.

1. Install anchor bolts, accurately located, to elevations required.

2. Install reglets to receive top edge of foundation sheet waterproofing and to receive through-wall flashings in outer face of concrete frame at exterior walls, where flashing is shown at lintels, shelf angles, and other conditions.

3. Install dovetail anchor slots in concrete structures as indicated.

3.02 JOINTS

A. General: Construct joints true to line with faces perpendicular to surface plane of concrete.

B. Construction Joints: Install so strength and appearance of concrete are not impaired, at locations indicated or as approved by Engineer.

1. Place joints perpendicular to main reinforcement. Continue reinforcement across construction joints, unless otherwise indicated. Do not continue reinforcement through sides of strip placements of floors and slabs.

2. Form from preformed galvanized steel, plastic keyway-section forms, or bulkhead forms with keys, unless otherwise indicated. Embed keys at least 1-1/2 inches into concrete.

3. Locate joints for beams, slabs, joists, and girders in the middle third of spans. Offset joints in girders a minimum distance of twice the beam width from a beam-girder intersection.

4. Locate horizontal joints in walls and columns at underside of floors, slabs, beams, and girders and at the top of footings or floor slabs.

5. Space vertical joints in walls as indicated. Locate joints beside piers integral with walls, near corners, and in concealed locations where possible.

6. Use epoxy-bonding adhesive at locations where fresh concrete is placed against hardened or partially hardened concrete surfaces.

C. Isolation Joints in Slabs-on-Grade: After removing formwork, install joint-filler strips at slab junctions with vertical surfaces, such as column pedestals, foundation walls, grade beams, and other locations, as indicated.

1. Extend joint-filler strips full width and depth of joint, terminating flush with finished concrete surface, unless otherwise indicated.

2. Terminate full-width joint-filler strips not less than 1/2 inch or more than 1 inch below finished concrete surface where joint sealants are indicated.

3. Install joint-filler strips in lengths as long as practicable. Where more than one length is required, lace or clip sections together.

3.03 WATERSTOPS

A. ASTM A653/A653M, 16-gauge, G-90 hot-dip galvanized sheet metal, 4 inches wide, unless noted otherwise shown with galvanized self-tapping sheet metal screw for securing 12-inch laps.

B. Center waterstop on joints.

C. Secure waterstop in correct position to avoid displacement during concrete placement. Make a visual inspection of the entire waterstop area.

D. Repair or replace damaged waterstops.

E. Place concrete and vibrate to obtain impervious concrete in vicinity of all joints.

F. Where metal waterstops are spliced, lap at least 12 inches and secure together with sheet metal screws.

G. Join waterstops at intersections to provide continuous seal.

3.04 CONCRETE PLACEMENT

A. Before placing concrete, verify that installation of formwork, reinforcement, and embedded items is complete and that required inspections have been performed.

B. Do not add water to concrete during delivery, at Project site, or during placement, unless approved by Engineer.

C. Before placing concrete, water may be added at Project site, subject to limitations of ACI 301.

1. Do not add water to concrete after adding high-range water-reducing admixtures to mix.

D. Deposit concrete continuously or in layers of such thickness that no new concrete will be placed on concrete that has hardened enough to cause seams or planes of weakness. If a section cannot be placed continuously, provide construction joints as specified. Deposit concrete to avoid segregation.

E. Deposit concrete in forms in horizontal layers no deeper than 24 inches and in a manner to avoid inclined construction joints. Place each layer while preceding layer is still plastic, to avoid cold joints.

   1. Consolidate placed concrete with mechanical vibrating equipment. Use equipment and procedures for consolidating concrete recommended by ACI 309R.

   2. Do not use vibrators to transport concrete inside forms. Insert and withdraw vibrators vertically at uniformly spaced locations no farther than the visible effectiveness of the vibrator. Place vibrators to rapidly penetrate placed layer and at least 6 inches into preceding layer. Do not insert vibrators into lower layers of concrete that have begun to lose plasticity. At each insertion, limit duration of vibration to time necessary to consolidate concrete and complete embedment of reinforcement and other embedded items without causing mix constituents to segregate.

F. Deposit and consolidate concrete for floors and slabs in a continuous operation, within limits of construction joints, until placement of a panel or section is complete.

   1. Consolidate concrete during placement operations so concrete is thoroughly worked around reinforcement and other embedded items and into corners.

   2. Maintain reinforcement in position on chairs during concrete placement.

   3. Screed slab surfaces with a straightedge and strike off to correct elevations.

   4. Slope surfaces uniformly to drains where required.

   5. Begin initial floating using bull floats or darbies to form a uniform and open-textured surface plane, free of humps or hollows, before excess moisture or bleedwater appears on the surface. Do not further disturb slab surfaces before starting finishing operations.

G. Cold-Weather Placement: Comply with ACI 306.1 and as follows. Protect concrete work from physical damage or reduced strength that could be caused by low temperatures.

   1. When air temperature has fallen to or is expected to fall below 40 deg F, uniformly heat water and aggregates before mixing to obtain a concrete mixture temperature of not less than 50 deg F and not more than 80 deg F at point of placement.

   2. Do not use calcium chloride, salt, or other materials containing antifreeze agents or chemical accelerators, unless otherwise specified and approved in mix designs.

H. Hot-Weather Placement: Place concrete according to recommendations in ACI 305R and as follows, when hot-weather conditions exist:

1. Cool ingredients before mixing to maintain concrete temperature below 90 deg F at time of placement. Chilled mixing water or chopped ice may be used to control temperature, provided water equivalent of ice is calculated to total amount of mixing water. Using liquid nitrogen to cool concrete is Contractor's option.

2. Cover steel reinforcement with water-soaked burlap so steel temperature will not exceed ambient air temperature immediately before embedding in concrete.

3. Fog-spray forms, steel reinforcement, and subgrade just before placing concrete. Keep subgrade moisture uniform without standing water, soft spots, or dry areas.

3.05 FINISHING FORMED SURFACES

A. Rough-Formed Finish: As-cast concrete texture imparted by form-facing material with tie holes and defects repaired and patched. Remove fins and other projections that exceed specified limits on formed-surface irregularities.

1. Apply to concrete surfaces not exposed to public view.

B. Smooth-Formed Finish: As-cast concrete texture imparted by form-facing material, arranged in an orderly and symmetrical manner with a minimum of seams. Repair and patch tie holes and defects. Remove fins and other projections that exceed specified limits on formed-surface irregularities.

1. Apply to concrete surfaces exposed to public view or to be covered with a coating or covering material applied directly to concrete.

C. Related Unformed Surfaces: At tops of walls, horizontal offsets, and similar unformed surfaces adjacent to formed surfaces, strike off smooth and finish with a texture matching adjacent formed surfaces. Continue final surface treatment of formed surfaces uniformly across adjacent unformed surfaces, unless otherwise indicated.

3.06 FINISHING FLOORS AND SLABS

A. General: Comply with ACI 302.1R recommendations for screeding, restraightening, and finishing operations for concrete surfaces. Do not wet concrete surfaces.

B. Flatness and Levelness: finish to the following tolerances, according to ASTM E 1155 and ACI117. Where a floor can be classified into more than one of the following categories the higher F(F) and F(L) specified shall apply:

1. Structural slabs in vehicle maintenance areas of the maintenance building: Specified overall values of flatness, F(F) 40; and of levelness, F(L) 30; with minimum local values of flatness, F(F) 28; and of levelness, F(L) 20.

2. All other structural slabs on grade not specified above: Specified overall values of flatness, F(F) 35; and of levelness, F(L) 25; with minimum local values of flatness, F(F) 24; and of levelness, F(L) 17.

C. Scratch Finish: While still plastic, texture concrete surface that has been screeded and bull-floated or darbied. Use stiff brushes, brooms, or rakes to produce a profile amplitude of 1/4 inch in one direction.

1. Apply scratch finish to surfaces to receive mortar setting beds for bonded cementitious floor finishes.

D. Float Finish: Consolidate surface with power-driven floats or by hand floating if area is small or inaccessible to power driven floats. Restraighten, cut down high spots, and fill low spots. Repeat float passes and restraightening until surface is left with a uniform, smooth, granular texture.

1. Apply float finish to surfaces to receive trowel finish and to be covered with fluid-applied or sheet waterproofing, or membrane roofing.

E. Trowel Finish: After applying float finish, apply first troweling and consolidate concrete by hand or power-driven trowel. Continue troweling passes and restraighten until surface is free of trowel marks and uniform in texture and appearance. Grind smooth any surface defects that would telegraph through applied coatings or floor coverings.

1. Apply a trowel finish to surfaces exposed to view or to be covered with resilient flooring, carpet, ceramic or quarry tile set over a cleavage membrane, paint, or another thin-film-finish coating system.

2. Finish surfaces to the following tolerances, according to ASTM E 1155, for a randomly trafficked floor surface:

a. Specified overall values of flatness, F(F) 35; and of levelness, F(L) 30; with minimum local values of flatness, F(F) 25; and of levelness, F(L) 20 for slabs on grade.

b. Specified overall values of flatness, F(F) 30; and of levelness, F(L) 25; with minimum local values of flatness, F(F) 25; and of levelness, F(L) 20; for suspended slabs.

F. Trowel and Fine-Broom Finish: Apply a first trowel finish to surfaces indicated where ceramic or quarry tile is to be installed by either thickset or thin-set method. While concrete is still plastic, slightly scarify surface with a fine broom.

1. Comply with flatness and levelness tolerances for trowel finished floor surfaces.

G. Broom Finish: Apply a broom finish to exterior concrete platforms, AGV entry slab, steps, and ramps, parking garage, and elsewhere as indicated.

1. Immediately after float finishing, slightly roughen trafficked surface by brooming with fiber-bristle broom perpendicular to main traffic route, unless otherwise indicated. Coordinate required final finish with Engineer before application.

a. Parking Structure: Broom swirl finish.

H. Dry-Shake Floor Hardener Finish: After initial floating, apply dry-shake floor hardener to surfaces according to manufacturer's written instructions and as follows:

1. Uniformly apply dry-shake floor hardener at a rate recommended by manufacturer.

2. Uniformly distribute approximately two-thirds of dry-shake floor hardener over surface by hand or with mechanical spreader, and embed by power floating. Follow power floating with a second dry-shake floor hardener application, uniformly distributing remainder of material, and embed by power floating.

3. After final floating, apply a trowel finish. Cure concrete with curing compound recommended by dry-shake floor hardener manufacturer and apply immediately after final finishing.

3.07 MISCELLANEOUS CONCRETE ITEMS

A. Filling In: Fill in holes and openings left in concrete structures, unless otherwise indicated, after work of other trades is in place. Mix, place, and cure concrete, as specified, to blend with in-place construction. Provide other miscellaneous concrete filling indicated or required to complete Work.

B. Curbs: Provide monolithic finish to interior curbs by stripping forms while concrete is still green and by steel-troweling surfaces to a hard, dense finish with corners, intersections, and terminations slightly rounded.

C. Equipment Bases and Foundations: Provide machine and equipment bases and foundations as shown on Drawings. Set anchor bolts for machines and equipment at correct elevations, complying with diagrams or templates of manufacturer furnishing machines and equipment.

3.08 CONCRETE PROTECTION AND CURING

A. General: Protect freshly placed concrete from premature drying and excessive cold or hot temperatures. Comply with ACI 306.1 for cold-weather protection and with recommendations in ACI 305R for hot-weather protection during curing.

B. Evaporation Retarder: Apply evaporation retarder to unformed concrete surfaces if hot, dry, or windy conditions cause moisture loss approaching 0.2 lb/sq. ft./hr before and during finishing operations. Apply according to manufacturer's written instructions after placing, screeding, and bull floating or darbying concrete, but before float finishing.

C. Formed Surfaces: Cure formed concrete surfaces, including underside of beams, supported slabs, and other similar surfaces. If forms remain during curing period, moist cure after loosening forms. If removing forms before end of curing period, continue curing by one or a combination of methods noted in paragraph 3.9D.

D. Unformed Surfaces: Begin curing immediately after finishing concrete. Cure unformed surfaces, including floors and slabs, concrete floor toppings, and other surfaces, by one or a combination of the following methods:

1. Moisture Curing: Keep surfaces continuously moist for not less than seven days with the following materials:

   a. Water.

   b. Continuous water-fog spray.

   c. Absorptive cover, water saturated, and kept continuously wet. Cover concrete surfaces and edges with 12-inch lap over adjacent absorptive covers.

2. Moisture-Retaining-Cover Curing: Cover concrete surfaces with moisture-retaining cover for curing concrete, placed in widest practicable width, with sides and ends lapped at least 12 inches, and sealed by waterproof tape or adhesive. Cure for not less than seven days. Immediately repair any holes or tears during curing period using cover material and waterproof tape.

   a. Moisture cure or use moisture-retaining covers to cure concrete surfaces to receive floor coverings.

   b. Moisture cure or use moisture-retaining covers to cure concrete surfaces to receive penetrating liquid floor treatments.

   c. Cure concrete surfaces to receive floor coverings with either a moisture-retaining cover or a curing compound that the manufacturer recommends for use with floor coverings.

3. Curing Compound: Apply uniformly in continuous operation by power spray or roller according to manufacturer's written instructions. Recoat areas subjected to heavy rainfall within three hours after initial application. Maintain continuity of coating and repair damage during curing period.

4. Curing and Sealing Compound: Apply uniformly to floors and slabs indicated in a continuous operation by power spray or roller according to manufacturer's written instructions. Recoat areas subjected to heavy rainfall within three hours after initial application. Repeat process 24 hours later and apply a second coat. Maintain continuity of coating and repair damage during curing period.

3.09 JOINT FILLING

A. Prepare, clean, and install joint filler according to manufacturer's written instructions.

1. Defer joint filling until concrete has aged at least six months. Do not fill joints until construction traffic has permanently ceased.

B. Remove dirt, debris, saw cuttings, curing compounds, and sealers from joints; leave contact faces of joint clean and dry.

C. Install semirigid epoxy joint filler full depth in saw-cut joints and at least 2 inches deep in formed joints. Overfill joint and trim joint filler flush with top of joint after hardening.

3.10 GROUTING

A. Install as indicated or required. Where grouting and drypacking is part of the work of other sections, it shall conform to the following requirements, unless specified otherwise.

B. Non-Shrink Grouting:

1. Mixing: Mix the approved non-shrink grout material with sufficient water per manufacturer's recommendations.

2. Application: Surfaces to receive the non-shrink grout shall be clean, and shall be moistened thoroughly immediately before placing the mortar. Before grouting, surfaces to be in contact shall be roughened and cleaned thoroughly, all loose particles shall be removed and the surface flushed thoroughly with neat cement grout immediately before the grouting mortar is placed. Place fluid grout from one side only and puddle, chain, or pump for complete filling of voids; do not remove the dams or forms until grout attains initial set. Finish exposed surfaces smooth, and cure as recommended by grout manufacturer.

3.11 CONCRETE SURFACE REPAIRS

A. Defective Concrete: Repair and patch defective areas when approved by Engineer. Remove and replace concrete that cannot be repaired and patched to Engineer's approval.

B. Patching Mortar: Mix dry-pack patching mortar, consisting of one part portland cement to two and one-half parts fine aggregate passing a No. 16 sieve, using only enough water for handling and placing.

C. Repairing Formed Surfaces: Surface defects include color and texture irregularities, cracks, spalls, air bubbles, honeycombs, rock pockets, fins and other projections on the surface, and stains and other discolorations that cannot be removed by cleaning.

1. Immediately after form removal, cut out honeycombs, rock pockets, and voids more than 1/2 inch in any dimension in solid concrete but not less than 1 inch in depth. Make edges of cuts perpendicular to concrete surface. Clean, dampen with water, and brush-coat holes and voids with bonding agent. Fill and compact with

patching mortar before bonding agent has dried. Fill form-tie voids with patching mortar or cone plugs secured in place with bonding agent.

2. Repair defects on surfaces exposed to view by blending white portland cement and standard portland cement so that, when dry, patching mortar will match surrounding color. Patch a test area at inconspicuous locations to verify mixture and color match before proceeding with patching. Compact mortar in place and strike off slightly higher than surrounding surface.

3. Repair defects on concealed formed surfaces that affect concrete's durability and structural performance as determined by Engineer.

D. Repairing Unformed Surfaces: Test unformed surfaces, such as floors and slabs, for finish and verify surface tolerances specified for each surface. Correct low and high areas. Test surfaces sloped to drain for trueness of slope and smoothness; use a sloped template.

1. Repair finished surfaces containing defects. Surface defects include spalls, popouts, honeycombs, rock pockets, crazing and cracks in excess of 0.01 inch wide or that penetrate to reinforcement or completely through unreinforced sections regardless of width, and other objectionable conditions.

2. After concrete has cured at least 14 days, correct high areas by grinding.

3. Correct localized low areas during or immediately after completing surface finishing operations by cutting out low areas and replacing with patching mortar. Finish repaired areas to blend into adjacent concrete.

4. Correct other low areas scheduled to receive floor coverings with a repair underlayment. Prepare, mix, and apply repair underlayment and primer according to manufacturer's written instructions to produce a smooth, uniform, plane, and level surface. Feather edges to match adjacent floor elevations.

5. Correct other low areas scheduled to remain exposed with a repair topping. Cut out low areas to ensure a minimum repair topping depth of 1/4 inch to match adjacent floor elevations. Prepare, mix, and apply repair topping and primer according to manufacturer's written instructions to produce a smooth, uniform, plane, and level surface.

6. Repair defective areas, except random cracks and single holes 1 inch or less in diameter, by cutting out and replacing with fresh concrete. Remove defective areas with clean, square cuts and expose steel reinforcement with at least 3/4 inch clearance all around. Dampen concrete surfaces in contact with patching concrete and apply bonding agent. Mix patching concrete of same materials and mix as original concrete except without coarse aggregate. Place patching concrete before bonding agent has dried. Compact and finish to match and blend with adjacent finished concrete. Cure in same manner as adjacent concrete. Keep patched area continuously moist for at least 72 hours.

7. Repair random cracks and single holes 1 inch or less in diameter with patching mortar. Groove top of cracks and cut out holes to sound concrete and clean off dust, dirt, and loose particles. Dampen cleaned concrete surfaces and apply bonding agent. Place patching mortar before bonding agent has dried. Compact patching mortar and finish to match adjacent concrete. Keep patched area continuously moist for at least 72 hours.

3.12 FIELD QUALITY CONTROL

A. Testing Agency: City will engage a qualified independent testing and inspecting agency to sample materials, perform tests, and submit test reports during concrete placement. Sampling and testing for quality control may include those specified in this Article.

B. Testing Services: Testing of composite samples of fresh concrete obtained according to ASTM C 172 shall be performed according to the following requirements:

1. Testing Frequency: Obtain at least one composite sample for each 100 cu. yd. or fraction thereof of each concrete mix placed each day.

2. Slump: ASTM C 143; one test at point of placement for each composite sample, but not less than one test for each day's pour of each concrete mix. Perform additional tests when concrete consistency appears to change.

3. Air Content: ASTM C 231, pressure method, for normal-weight concrete; ASTM C 173, volumetric method, for structural lightweight concrete; one test for each composite sample, but not less than one test for each day's pour of each concrete mix.

4. Concrete Temperature: ASTM C 1064; one test hourly when air temperature is 40 deg F and below and when 80 deg F and above, and one test for each composite sample.

5. Unit Weight: ASTM C 567, fresh unit weight of structural lightweight concrete; one test for each composite sample, but not less than one test for each day's pour of each concrete mix.

6. Compression Test Specimens: ASTM C 31/C 31M; cast and laboratory cure one set of four standard cylinder specimens for each composite sample.

   a. Cast and field cure one set of four standard cylinder specimens for each composite sample.

7. Compressive-Strength Tests: ASTM C 39; test one laboratory-cured specimens at 7 days, two at 28 days, and hold one for future testing should it be required.

   a. Test one field-cured specimen at 7 days, two at 28 days, and hold one for future testing should it be required.

b. A compressive-strength test shall be the average compressive strength from two specimens obtained from same composite sample and tested at age indicated.

C. When strength of field-cured cylinders is less than 85 percent of companion laboratory-cured cylinders, Contractor shall evaluate operations and provide corrective procedures for protecting and curing in-place concrete.

D. Strength of each concrete mix will be satisfactory if every average of any three consecutive compressive-strength tests equals or exceeds specified compressive strength and no compressive-strength test value falls below specified compressive strength by more than 500 psi.

E. Test results shall be reported in writing to Engineer, concrete manufacturer, and Contractor within 48 hours of testing. Reports of compressive-strength tests shall contain Project identification name and number, date of concrete placement, name of concrete testing and inspecting agency, location of concrete batch in Work, design compressive strength at 28 days, concrete mix proportions and materials, compressive breaking strength, and type of break for both 7-and 28-day tests.

F. Nondestructive Testing: Impact hammer, sonoscope, or other nondestructive device may be permitted by Engineer but will not be used as sole basis for approval or rejection of concrete.

G. Additional Tests: Testing and inspecting agency shall make additional tests of concrete when test results indicate that slump, air entrainment, compressive strengths, or other requirements have not been met, as directed by Engineer. Testing and inspecting agency may conduct tests to determine adequacy of concrete by cored cylinders complying with ASTM C 42 or by other methods as directed by Engineer.

END OF SECTION

Section 079513
EXPANSION AND SEISMIC JOINT COVER

PART 1 — GENERAL

1.01 Summary
A. This section includes the following:
1. Expansion and seismic joint systems for building exteriors
2. Expansion and seismic joint systems for roofs

1.02 Related Work
A. Related work that is specified elsewhere
1. Section 03300: Cast-In-Place Concrete
2. Section 054000: Cold Formed Metal Framing

1.03 Definitions
A. Nominal Joint Width: The width of the expansion joint opening as specified in the project documents, at which the expansion joint will be constructed and the cover will be installed
B. Maximum Joint Width: The widest expansion joint width which the joint cover is required to accommodate without damage to its components
C. Minimum Joint Width: The narrowest expansion joint width which the joint cover is required to accommodate without damage to its components
D. Movement Capability: The amount of movement in a single direction (open or close), given as a percentage of the nominal joint width, that the joint cover is required to accommodate without damage to its components
E. Lateral Shear: Movement horizontally and parallel to the expansion joint
F. Vertical Shear: Movement vertically and parallel to the expansion joint

1.04 Submittals
A. Submission must be made within fifteen (15) working days of the contract award to avoid project delay.
B. Submittals shall contain the following as required for each specified system
1. Shop Drawings showing complete fabrication details for all joint covers, including required anchorage to surrounding construction, recesses, blocking, backing, and connections between similar and dissimilar joint cover assemblies
2. Manufacturer's product data including product details, installation instructions, maintenance and cleaning instructions, Safety Data Sheets, and LEED documentation
3. Certificates, copies of independent test reports, or research reports showing compliance with fire resistance rating and other specified performance requirements
4. Two (2) complete sets of color chips representing manufacturer's full range of available colors and patterns
5. Three (3) 6" (152mm) samples of the specified systems

1.05 Quality Assurance
A. Manufacturer: Obtain joint cover assemblies through one source from a single manufacturer.

1. Manufacturer shall have a third party certified ISO 9001 quality management system.
    a. The manufacturer shall have documented management and control of the processes that influence the quality of its products
    b. The manufacturer shall have documented management and control of the processes that influence the quality of its customer service.
2. Manufacturer shall have a minimum of ten (10) years of experience in the fabrication of joint cover assemblies.

B. Installer: All products listed in this section shall be installed by a single installer with demonstrated experience in installing products of the same type and scope as specified. Installer shall be insured and licensed as required by the City.

1.06 Coordination

A. Submittals shall be completed and approved prior to fabrication and shipment of material to the jobsite.

B. Schedule for the work of this section shall be planned to allow sufficient time for manufacturer's production and delivery scheduling.

C. Coordinate installation of products and systems with interfacing and adjoining construction to provide a successful and proper installation.

D. Coordinate installation of exterior joint assemblies to ensure that transitions are watertight.

E. Verify product types, quantities, dimensions, and attachment methods shown on shop drawings against field conditions prior to releasing materials for fabrication by the manufacturer.

F. Communicate necessary changes on the manufacturer's shop drawings

1.07 Delivery, Storage, and Handling

A. Provide temporary protective cover on anodized aluminum, stainless steel, and bronze finished surfaces.

B. Deliver joint covers to jobsite in clean, unopened crates of sufficient size and strength to protect materials during transit.

C. Store components in original containers in a clean, dry location.

1.08 Warranty

A. Submit manufacturer's warranty that materials furnished will perform as specified for a period of not less than five (5) years when installed in accordance with manufacturer's recommendations.

PART 2 — Products

2.01 Manufacturers

A. Furnish and install as noted in specifications and as indicated on drawings as manufactured by Balco, Inc., PO Box 17249, 2626 S. Sheridan, Wichita, KS 67217; phone: 800-767-0082 or (316) 945-0789.

B. Substitutions: Submit proposed substitutions in writing to the architect not less than 10 days before bids are due. Submit samples and product data to demonstrate acceptability of proposed substitute. Acceptance will be by addendum.

2.02 Expansion and Seismic Joint Systems

A. Exterior Expansion and Seismic Joint Systems [

1. FCVS 5/6, FCVS 6
   a. Seismic Joint Screw Movement per ASTM E1399:
      1) Expansion/contraction: 100%
   b. Lateral shear: 100% *(Joint sizes 2" –6")*
      Fire rating per UL 2079/ASTM 1966:
   c. 45 Mil EPDM water barrier
   d. Finish:
      1) Elastomeric Seals: Color as selected and approved from manufacturer's samples.
      2) All surfaces in contact with masonry or concrete shall be protected by a factory-applied coating.

B. Roof Expansion and Seismic Joint Systems

1. 9WC-6

2.03 Materials

A. Metals

1. Aluminum extrusions: ASTM B221, alloys 6063-T5, 6005A-T6, 6061-T6
2. Aluminum plate and sheet: ASTM B209, alloys 6061-T6, 5052-H32
3. Steel: ASTM A36 Plate
4. Stainless steel: ASTM A666, type 304
5. Bronze extrusions: ASTM B455, alloy C38500
6. Bronze sheet and plate: ASTM B36, C28000 Muntz metal

B. PVC Vinyl: 90 Shore A, ASTM D2240

C. Silicone: ASTM D 2000 4GE 709 M

D. Santoprene

1. 75 shore A durometer, 15 sec, ISO 868
2. Face seals to be installed in exterior conditions shall be UV resistant.

E. Abrasive: Two (2) part epoxy and colored quartz

F. Water Barrier: Flexible EPDM, Class I, ASTM D4637, 45 mils thick (minimum)

G. Fire Barriers: Designed for indicated or required dynamic structural movement without material degradation or fatigue when tested according to ASTM E 1399. Tested in maximum joint width condition with a field splice as a component of an expansion joint cover by an independent, nationally recognized testing entity in accordance with UL 2079, or ASTM E1966, including hose stream test, where applicable, at the full rated period. Assemblies shall be listed with an independent, nationally recognized testing and listing entity.

H. Standard fasteners required for assembly and installation shall be included

I. All surfaces in contact with masonry or concrete shall be protected by a factory-applied coating.

2.04 Finishes

A. Aluminum

1. Floors:
   a. Mill finish extrusions, AA-M10 (As fabricated, unspecified)
   b. Mill finish plate, AA-M30 (Directional textured finish, unspecified)
2. Exterior Walls and Roofs:
   a. AA-M10 (As fabricated, unspecified)
   b. High-Performance Organic Coating (Kynar or Trinar)
   c. Other

3. All surfaces in contact with masonry or concrete shall be protected by a factory-applied coating

B. Steel
1. Galvanized steel plate shall meet ASTM 123
2. Galvanized sheet metal shall meet ASTM A65 G90
3. All surfaces in contact with masonry or concrete shall be protected by a factory-applied coating

C. Bronze
1. Floors: Clear coated directional textured finish
2. Interior walls: #2 Cold rolled mill finish
3. All surfaces in contact with masonry or concrete shall be protected by a factory-applied coating

D. Stainless Steel
1. Floors: Directional textured finish
2. Interior walls: #3 Finish
3. Exterior walls: #3 Finish
4. All surfaces in contact with masonry or concrete shall be protected by a factory-applied coating

E. Elastomeric Seals:
1. Color as selected and approved from manufacturer's samples

F. Foam seals with silicone face:
1. Color as selected and approved from manufacturer's samples

G. Abrasive:
1. Black (Standard)

PART 3 — Execution

3.01 Examination

A. Installer shall examine conditions under which work is to be performed and shall notify the contractor in writing of unsatisfactory conditions. Installer shall not proceed until all unsatisfactory conditions have been corrected in a manner acceptable to the installer.

3.02 Preparation

A. Prepare surfaces using methods recommended by the manufacturer for achieving the required results within project conditions.

B. Corner blockouts should be square, level, free of spalling or laitance, and meet the dimensions shown on shop drawings. Repairs should be made using appropriate materials as recommended by concrete repair material manufacturer, based on project-specific conditions.

C. Concrete repair material must be applied and allowed to cure in accordance to the manufacturer of the product recommendations and instructions.

D. Clean dirt, debris, and other contaminants from both the blockout and joint opening

E. Mask areas adjacent to the joint as required to achieve neat, clean joint lines. Remove masking prior to the curing process.

3.03 Installation

A. Install expansion and seismic joint covers in accordance with the manufacturer's instructions.

B. Centering bars shall be fully engaged with base members.

C. Locate fasteners at interval recommended by manufacturer as shown on shop drawings.

D. Floor systems: Where shimming is required, provide continuous support for base members to prevent vertical deflection when in service.
E. Heavy-duty floor systems: Repair or grout blockouts as required for continuous frame support. Bring base members to proper level; shimming is not allowed.
F. Fire-rated joint covers: Install fire rated covers in accordance with requirements of applicable fire rated product. Install fire barriers and flame sealant as shown on shop drawings and in accordance with installation instructions.
G. Water barrier: Install water barriers at exterior joints and where called for on shop drawings. Provide drainage fittings where called for on shop drawings.

3.04 Protection and Cleaning

A. Protect the installation from damage by work of other sections.
B. Where required, remove and store cover plates and install temporary protection over joints and re-install cover plates prior to substantial completion of work.
C. Do not remove protective coverings until finish work in adjacent areas is complete.
D. Prior to project closeout, clean exposed surfaces with a suitable cleaner as recommended by manufacturer.

SECTION 211313

WET-PIPE FIRE SPRINKLER SYSTEM

PART 1 - GENERAL

1.1 SUMMARY

A. Work Included:

1. Fabricate, install, and secure necessary approvals for the Automatic Fire Sprinkler System for the Fire Station No. 7 project in Ventura, California. The fire sprinkler system is to include fire sprinkler coverage throughout the new building as shown on the Construction Documents. Install a complete fire protection system acceptable to the authorities having jurisdiction for the proposed system.

2. Provide all materials and equipment, and perform all labor required to provide shop drawings and install complete fire protection system from the fire sprinkler riser locations indicated on the fire sprinkler system construction document sheets continuing throughout the buildings per the construction documents in accordance with this specification, the current adopted edition of the CBC, CFC, NFPA 24, NFPA 13, and City of Ventura Fire Department requirements.

3. Provide personnel and materials to perform all acceptance tests, and to assist in inspections. Tests to be witnessed by the City of Ventura Fire Department.

4. Provide all fire stopping material and installation labor, using UL Listed fire blocking systems, at all fire sprinkler system penetrations of fire rated assemblies.

5. The fire sprinkler system installation is to comply with the basis of design summary for the noted fire areas as indicated on Sheet FS-0.0 of the construction documents, listed under the “DESIGN CRITERIA” heading.

1.2 QUALITY ASSURANCE

A. Contractors and Manufacturers:

1. The performance of the work described in this Section is restricted to established Contractors and Manufacturers specializing in automatic fire sprinkler systems that have satisfactorily completed jobs of this size and type, who are acceptable to the City of Ventura Fire Department. The Contractor shall hold a valid California C-16 contractor’s license. The Contractor shall demonstrate satisfactory installations of comparable systems within the proceeding five years, and shall supply references.

B. Installation Responsibility:

1. The Contractor is hereby advised that the responsibility for the installation of the fire protection system is totally that of the Contractor, and that all designs and resolutions proposed in their Shop Drawings, calculations and related documentation must be demonstrated not only in the test procedure but also throughout the guarantee period.

2. The System specified herein is for defining design intent, installation intent and minimum performance requirements and may not be downgraded without written consent of the Architect, Owner, and AHJ.

3. See Architect's Construction Documents for location requirements of fire sprinkler system.

4. No changes to AHJ approved drawings are permitted without approval by the architect, engineer, and the AHJ inspection staff.

C. Testing Laboratories: All material and equipment used in the installation of the fire protection systems shall be listed as approved by the Underwriters Laboratories, Inc., List of Fire Protection Equipment and Materials, or approved by other appropriate, nationally recognized testing laboratories for use in sprinkler systems, and shall be the latest design of the manufacturer.

D. Requirements of Regulatory Agencies: Obtain necessary approvals from, have all materials approved by, and comply with requirements of all Authorities Having Jurisdiction.

E. Coordinate and secure installation of fire service line and connect to fire service lateral as required.

F. Comply with the requirements of the 2022 adopted editions of the CBC/CFC, NFPA pamphlets 13 and 24.

1.3 PRODUCTS AND SUBMITTALS

A. Product Data: Complete materials list of items with available finishes proposed to be provided under this Section. The quality of materials required for this installation shall be that which comply with the requirements of the City of Ventura Fire Department and the 2022 edition of NFPA 13. All materials must be UL Listed for fire protection. All piping shall be free from rust.

B. Shop Drawings:

1. Prior to submitting shop drawings and product submittals to the Architect, indicate any proposed re-locations of the following items on plans and submit to the Architect and Owner for review:

   a. Sprinklers in finished rooms:

   b. Grills and registers:

   c. Light fixtures, speakers, and smoke detectors:

   d. All underground fire service piping, backflow assemblies, thrust blocks and related appurtenances.

2. Required fire sprinkler locations: Per Construction documents, any proposed revisions are to comply with the following:

a. Corridors and halls: Align sprinklers symmetrically so as not to conflict with other ceiling items.

b. Rooms: Center sprinklers in-line with other ceiling devices.

c. Acoustical tile or panel ceilings: Locate sprinklers in center of tile or panel.

3. Architect will review layout and may relocate or add sprinklers to achieve an orderly pattern of ceiling elements, at the Contractors sole expense.

4. If required by Architect, meetings will be held at their office to coordinate locations of sprinklers with other ceiling elements.

5. After obtaining Architect approval of sprinkler locations, prepare final shop drawings and product submittals for review by the Architect. Indicate all elements indicated in paragraph 1.3, B, 1 above, and any other required information.

C. Project Record Documents:

1. Submit three (3) copies of Project Record Documents

2. Contractor to provide a completed and signed NFPA 13 Contractors Material and Test Certificate upon acceptance of the system by the City of Ventura Fire Department.

D. Operation/Maintenance Data And Warranty:

1. Upon completion of this portion of the Work, and as a condition of its acceptance, deliver to the Owner and the Architect (3) copies of an Operation and Maintenance Manual. Include in each copy of the Manual of a copy of the Project Record Documents

2. The Contractor shall provide a minimum warranty of one year after final inspection and sign-off of the fire sprinkler system, including all parts, materials of construction and labor for the installation.

E. General Piping Requirements

1. Underground Piping: Provide an installation which is complete in all regards including, but not necessarily limited to:

a. Provide fire service supply piping per Civil Engineers' water utility plans, Sheet FP-1.0, and site water line specification.

b. Connections from main to base of riser shall be as shown on project drawings.

c. When using approved PVC piping for underground supply piping, a transition shall be made to ferrous pipe shall be accomplished at the following locations:

1) A minimum distance of five feet from a 90-degree elbow designed to supply a sprinkler riser.

2) A minimum distance of five feet from the underground elbows on the supply and service side of an above ground exterior check valve and other above grade exposed piping, fittings, connections, or valves.

3) A minimum distance of five feet prior to entering a building.

4) A minimum distance of five feet prior to passing under or through a footing or retaining wall.

2. Above Grade Piping – All pipe shall be made in the USA domestically manufactured, and shall be UL Listed for Fire Protection System installation.

   a. Flanged fittings shall be used at above grade exterior locations.

   b. Connections and fittings shall be threaded, flanged, grooved, or welded. Grooveless clamp or saddle fittings are not acceptable. Fittings and couplings shall be Class 125 (standard) weight minimum.

F. Fire Sprinklers:

1. In soffits and interior ceilings: Victaulic Semi-Recessed or Concealed Quick Response Pendents (finish selected by architect) or approved equal, per fire sprinkler system construction document plans.

2. In hard ceilings: Victaulic Semi-Recessed or Concealed Quick Response Pendents (finish selected by architect) or approved equal, per fire sprinkler system construction document plans.

3. Sidewall interior sprinkler to be Victaulic Quick Response (finish to be selected by Architect) or approved equal.

4. Concealed and open roof spaces: Victaulic Quick Response upright or pendents, brass finish, as approved for use.

G. Fire Sprinkler System Piping:

1. Pipe sized 1” thru 2”: Use domestically manufactured Schedule 40 black steel pipe with threaded, banded cast or malleable iron fittings, or equivalent, UL Listed for fire protection.

2. Pipe sized 2 ½” thru 8”: Use domestically manufactured Schedule 10 black steel pipe with welded and/or grooved cast iron fittings of required pressure rating, UL Listed for fire protection.

3. Piping sized 8” and larger to be Schedule 10, UL Listed steel piping.

H. Fire Department Connection (FDC)

1. Provide appropriate sized (four inch or larger, depending on system design) freestanding pipe mount, cast brass FDC with 2-1/2-inch individually clappered fire department inlet connections with breakable cast iron domed caps, one-inch cast lettering. The Fire Department Connection shall be Potter Roemer Standard No. 5500 series, UL listed with a finish as selected by the Architect.

2. Fire department connection shall be located where indicated on Sheet C-1.0 Note: Where conditions do not permit, the fire department connections shall be placed where readily accessible in case of fire and not liable to injury or fire exposure. All fire department connection locations shall be approved by the City of Ventura Fire Department.

3. Where subject to mechanical injury, protection shall be provided. The means of protection shall be approved and shall be arranged in a manner, which will not interfere with the connection to inlets.

4. Maintain a 36-inch clear radius around the fire department connection. Grade variation within this radius shall not exceed 1:12. The fire department connection shall be arranged so that hose lines can be readily and conveniently attached to inlets without interference from any nearby objects including buildings, fences, posts, or other fire department connections.

5. The fire department connection shall be clearly visible from the street and provided with identification sign as approved by City of Ventura Fire Department.

I. Supervisory switch: Designed so that it will operate between the first and second revolution of the valve control wheel or when the stem moves no more than one fifth of the distance from its normal position or if the unit is removed from its mounting.

J. Flow switch: All wetted parts of brass or stainless steel. Flow switch to be complete with retard setting providing 30 second delay before actuating.

K. Valves: U.L. listed Kennedy, Nibco, or Stockham or approved alternate. Valves shall be rated for minimum 175 psi working pressure zones.

L. Pressure gauge: Bourdon spring pressure type with non-corrodible movements, set in cast iron case with black flange and with rings of pressed brass, flared type construction. Cases and rings black enamel finish. Gauges shall have 4-1/2” dials with white background, black lines, and figures, calibrated for 2 times working pressure. Installation: Each gauge connected to its respective pipe line located where shown and at inlet and outlet of each pump, by means of suitable brass pipe, pigtails and fittings containing a brass cock, Ashcroft, U.S. Gauge Company or Crosby.

M. Piping Seismic Separation Joints, where required, shall be Metraloop-Fireloop UL Listed Flexible Expansion Loops, as manufactured by the Metraflex Company Chicago, Illinois.

N. Sprinkler Cabinet

1. Provide cabinet containing spare sprinklers and equipment of the following type and number installed at an interior location nearest the wall at the system riser, in an accessible location as directed by Architect, and as approved by AHJ. Provide 6 sprinklers of each type used in the installation, with sprinkler wrenches.

2. The cabinet shall be distinctly labeled, designating the type and quantity of equipment it contains.

1.4 INSTALLATION AND EXECUTION

A. Install the work of this Section in strict accordance with the reviewed Shop Drawings and the requirements of the Architect and other Authorities Having Jurisdiction. Relocate any sprinklers not aligned with other ceiling fixtures or outlets at Contractors sole expense.

B. Coordinate routing of sprinkler piping with all other trades that will be affected by the installation of the fire sprinkler system so as to avoid interferences. The cost of any field to work in place due to incomplete or inaccurate coordination revisions with other trades will be the responsibility of the Contractor

C. Maintain maximum clearances above ceilings. All piping to be concealed unless specifically noted otherwise on the plans.

D. Install drains on main risers and auxiliary drains in accordance with standard practices and local ordinances. Install one Inspector's Test drain on each system and discharge to an approved exterior location where indicated on the project drawings and approved by the Architect.

E. Access: Do not locate any device requiring access in walls or above ceilings of public areas without Architect's prior approval. Provide access doors complying with specifications and signs for all concealed devices.

F. Piping, Hangers, Supports, Anchors and Sleeves: Install in complete accordance with NFPA 13 requirements, using UL Listed components by Cooper B-Line.

G. Install all horizontal piping so as to run parallel to or perpendicular to the building walls, unless otherwise shown on the Drawings or approved by the Architect. Do not install sprinkler piping that obstructs any door openings.

H. Guide and support all vertical risers or piping in accordance with standard practice. Fabricate and construct pipe joints so that they produce a true alignment of the pipe. Ream all pipe ends. Construct welded pipe joints in accordance with applicable codes.

I. Run all piping in such a manner as to provide appropriate flexibility with respect to expansion and contraction. In general, accomplish this with flexible couplings, expansion loops and/or leads from mains with proper lengths and appropriate fittings. Anchor piping is required.

J. Where exposed piping penetrates the floors, walls, or ceiling of finished areas, provide chromium plated pipe escutcheons at the penetrations.

K. Provide pipe sleeves through partitions, walls, and slabs and outside walls for piping furnished and installed under this Section. Extend all vertical pipe sleeves in floor 6” above the finish. Provide Drawings showing openings for proper installation of the work specified.

L. Provide all UL Listed hangers and supports required for the installation. Bracing the pipes to bottom flanges of steel beams is not permitted.

M. Use hot dipped galvanized materials in any exterior or open spaces such as canopies or covered walkways.

N. Clean pipe and fittings and keep interiors clean throughout installation. Provide caps on ends of cleaned piping.

O. Use full pipe lengths; random lengths joined by couplings will not be accepted.

P. Provide for expansion and contraction of all pipes and for seismic movement. Provide reducing fittings for all changes in pipe size; provide fittings for all changes in pipe direction. Riser piping shall be installed plumb with offset fittings used where alignment adjustment is necessary.

Q. Provide unions for pipe sizes below two-inch and flanged or grooved fittings for sizes two-inch and above to permit disconnection of equipment and fixtures.

R. Prepare all piping having welds for City of Ventura Fire Department inspection prior to installation.

S. On-site fire code welding permits shall be obtained from the City of Ventura Fire Department.

T. Piping arrangement shall avoid beams, columns, ducts, lighting fixtures, doors, windows, and similar obstructions for openings.

U. All piping that penetrates fire rated construction shall be fire stopped in accordance with these specifications and project drawings.

V. Underground Piping Installation

1. All bolts, nuts, washers, and rodding used for the installation of underground piping, valves, and fittings from the riser flange back to, and including all parts of the water main tap shall be stainless steel conforming ASTM A194 Grade 8M or ASTM A320 Grade B8M. All of the above materials shall be thoroughly coated with bituminous mastic. After coating, all valves and ferrous fittings shall be wrapped in 8-mil polyethylene film and securely taped in place with underground tape. The above materials shall be left visible for inspection by the City of Ventura Fire Department prior to backfilling.

2. Install in accordance with referenced standards, codes, and manufacturer’s instructions, and this specification.

3. Piping shall have a minimum cover of three feet under driveways, fire lanes, roads, streets, and two and one half feet of cover in open areas. Cover shall be measured from finished grade to top of pipe. Provide a six-inch bed of sand below pipe and twelve-inch cover of sand above piping with locator tape on top of the sand.

4. The depth of the bottom of all horizontal piping below grade shall not exceed the level distance measured from the pipe centerline to the nearest top edge of any adjacent building footing, unless approved by the Architect, shall have not less than 3-foot earth coverage.

5. Clearance shall be provided around all piping extending through floors, walls, platforms, and foundations, including drains, fire department connections, and other auxiliary piping, in accordance with the provisions of NFPA 13.

6. After underground work is complete and has been tested in accordance with referenced standards, the contractor shall complete a NFPA 24 Contractor's Material and Test Certificate for Private Fire Service Mains and provide it to Los Angeles Fire Department.

7. Installation of underground water piping shall include concrete thrust blocks and anchors where vertical or horizontal deflection is 45 degrees or more, or at the intersection lines. Thrust block locations, design, and installation shall be in accordance with NFPA 24.

1.5 TESTING

A. All tests described and referenced in these specifications shall be performed by the Contractor in the presence of City of Ventura Fire Department. Tests and inspections shall apply to all water-sourced fire protection systems, including fire hydrants, sprinklers, standpipes, and all underground piping that is installed to supply these systems and devices.

B. Hydrostatic Test Preparation

1. Interior piping shall be filled with water for two (2) hours preceding hydrostatic testing.

2. Piping shall be purged of all air and other gasses prior to hydrostatic testing.

3. Underground piping shall be center loaded and all fittings, joints, strapping, and thrust blocking shall be exposed for hydrostatic pressure testing and inspection.

4. All above grade and interior piping, fittings, sprinklers and supports shall be exposed for inspections and hydrostatic testing.

5. A hydrostatic pre-test shall be conducted for both aboveground and underground piping prior to calling for City of Ventura Fire Department final acceptance test. Written confirmation of passed 100% pre-test shall be given to the inspector of record prior to calling for final. All cost associated with delays caused by failure to complete 100% operational pre-test shall be borne by the contractor. A Contractors Material and Test Certificate shall be filled out upon completion of testing.

C. Fire department connections and piping shall be included in hydrostatic testing and shall be back flushed until clear water is observed.

D. Underground mains and supply connections to sprinkler risers shall be flushed thoroughly before connections to sprinkler systems.

E. Tests of drainage facilities shall be conducted by opening each drain valve while the system control valves are open to the supply.

F. All water level sensors, alarm and supervisory signals, tanks and automatic valves shall be performance tested.

G. Water remaining in normally dry piping shall be evacuated at completion of testing.

H. Contractor to provide to the Owner completed copies of the forms depicted in Figure 25.1 “Contractor’s Material and Test Certificate for Above Ground Piping” of the 2022 Edition of NFPA 13, upon completion of the system installation and approval by the AHJ.

END OF SECTION 211313

SECTION 22 00 00

PLUMBING

PART 1 - GENERAL

1.1 DESCRIPTION

A. Related Documents:

1. Drawings and general provisions of the Contract, including General and Supplementary Conditions and Division 01 Specification Sections, apply to this Section.
2. Section 23 00 13 General Commissioning Requirements.
3. Where the requirements of the Section exceed those in other Contract Documents, Contractor shall comply with the requirements of this Section.

B. Codes and Regulations:

1. In addition to complying with the specified requirements, comply with pertinent regulations of the Authority Having Jurisdiction. All work must comply with the version of the code that was in effect at the time of the initial permit application date.
   a. CALGreen – California Green Building Standards Code
   b. CBC – California Building Code
   c. CEC – California Electrical Code
   d. CEnC – California Energy Code
   e. CFC – California Fire Code
   f. CMC – California Mechanical Code
   g. CPC – California Plumbing Code
   h. DPH – Department of Public Health
   i. DWR – Department of Water Resources
   j. NFPA – National Fire Protection Association
   k. OSHPD – Office of Statewide Health Planning and Development
   l. SFM – Office of the State Fire Marshal
   m. Reach Codes that have been adopted by the Authority Having Jurisdiction
   n. Local Building Department
   o. Local Fire Marshall

C. Included: Work includes, but is not limited to, the following.

1. The Work covered by this Specification shall include furnishing labor, material, equipment, and services to construct, install and place in operation, the complete Plumbing Systems to the extent as indicated, and as shown on the Drawings and specified herein. The Work covered under this Section shall hereinafter be referred to as the Plumbing System.

   a. WASTE AND VENT

      1. Soil piping
      2. DWV - Drain Waste and Vent Piping
      3. Indirect waste piping
      4. Area drains.
      5. Floor drains.
      6. Traps.
      7. Vent flashings.
      8. Trench drains.

   b. SEWERS (To five feet beyond building)

      1. Including metallic or non-metallic piping used to convey sewage and other waste to, and including, connection with offsite utility or onsite treatment and disposal system.
      2. Manholes (pre-cast or pre-formed), cesspools, clarifier, and leaching lines, backwater valves and lift stations.

   c. WATER

      1. Potable water piping systems including above and below grade tanks, pressure reducing valves, relief valves, balancing valves, water hammer shock absorbers, air chambers.
      2. Isolation, Zone and Control Valves.
      3. Hot water systems including heaters and storage tanks.
      4. Disinfecting of water systems.
      5. Insulation of piping and equipment for heat, sound, and vibration.
      6. Backflow preventers.

   d. ALL PLUMBING FIXTURES AND SUPPORTS

      1. Including, but not limited to:

(a) Sinks, lavatories, water closets, urinals, tubs, service sinks, etc., - all materials

(b) Shower pans, shower receptors, and shower stalls

(c) Supports (backing) for all plumbing fixtures and accessories

(d) Installation of sinks in or part of drainboards - all materials

e. AIR PIPING

1. Compressed air systems including compressor plant

2. System controls

f. PIPE IDENTIFICATION

g. Refer to section 23 00 13

h. CONNECTIONS

1. Utilities-Sanitary sewer, storm drain, water, gas

2. Make-up water for heating and cooling systems

3. Hot water tanks

4. Temporary water, waste and air lines

5. The joining of pipe by any mode or method including, but not limited to, acetylene and arc welding, brazing, lead burning, plastics welding, soldering, wiped joints, caulked joints expanded or rolled joints, etc., used in connection with any of the work listed herein.

i. LAYOUT AND CUTTING

1. Holes, chases, channels, the setting and erection of bolts, inserts, stands, brackets, stanchions, supports, sleeves, escutcheon plates, thimbles, hangers, conduits, and boxes.

j. EXCAVATION, TRENCHING AND BACKFILL

1. In connection with plumbing and piping work shown herein

k. TEMPORARY PIPING in connection with:

1. Building and construction work

2. Excavating and underground construction

3. Demolition work

l. PIPE HANGERS, SUPPORTS, ANCHORS, GUIDES, EXPANSION JOINTS

1. Including:

(a) Supports for equipment to which pipe is connected, such as tank supports

(b) Isolators-dielectric and vibration

(c) Anchors and thrust blocks of concrete, metal, etc.

(d) Seismic bracing

(1) Anvil/Badger, Mason Industries, B-Line/TOLCO or approved equal.

(2) Seismic hanger system design shall comply with the 2022 CBC requirements and ASCE 7-16.

m. SIGNS AND NOTICES

n. ROOF FLASHINGS FOR PIPING PENETRATIONS

o. TESTS

1. Piping, for tightness

2. Equipment for performance

3. Operating instructions

4. Final operation

1.2 ACCESSIBLE PLUMBING FIXTURES

A. Accessible plumbing fixtures shall comply with all of the requirements of the 2022 CBC 11B-213, 11B-305, &11B-308.

1.3 QUALITY ASSURANCE

A. Use adequate numbers of skilled workers who are thoroughly trained and experienced in the necessary crafts and who are completely familiar with the specified requirements and the methods needed for proper performance of the Work of this Section.

B. Without additional cost to the Owner, provide such other labor and materials as are required to complete the Work of this Section in accordance with the requirements of governmental agencies having jurisdiction, regardless of whether such materials and associated labor are called for elsewhere in these Contract Documents.

C. Welder's Qualifications: Comply with ASME B31.8. The pipe welder shall have a copy of a certified ASME B31.8 qualification test report. Contractor shall also conduct a qualification test. Submit each welder's identification symbols, assigned number, or letter, used to identify work of the welder.

Affix symbols immediately upon completion of welds. Welders making defective welds after passing a qualification test shall be given a requalification test and, upon failing to pass this test, shall not be permitted to work this contract.

1.4 SUBMITTALS

A. Comply with pertinent provisions of Architectural Sections.

B. Product Data: Within 35 calendar days after the Contractor has received the Notice to Proceed, submit to the Architect for approval prior to acquisition:

1. Materials list of items proposed to be provided under this Section.

2. Manufacturer's specifications, cut sheets, and other data needed to prove compliance with the specified requirements. All pieces of equipment shall be clearly identified on corresponding manufacturer's literature being submitted. All information for each item shall be correlated.

3. Shop Drawings or other data as required to indicate method of installing and attaching equipment and piping, except where such details are fully shown on the Drawings.

4. Submittals for the entire Project shall be submitted at the same time. Incomplete or noncompliant submittals may be rejected.

5. Submittals shall be provided in PDF format.

1.5 DESIGN CHANGES CAUSED BY PRODUCT SUBSTITUTIONS

A. If the domestic water heater is substituted with a different brand or model than what is specified on the Drawings the Authority Having Jurisdiction may require the energy compliance calculations to be updated. The contractor shall be responsible for all costs related to updating the calculations. If the substituted equipment does not comply, the contractor shall be responsible for providing equipment that meets or exceeds the performance of the specified equipment at no additional cost to the owner.

B. Contractor shall pay costs of design and installation for changes resulting from substitution of alternate products.

C. Acceptance of alternate products by Architect does not change this requirement.

1.6 PRODUCT HANDLING

A. Comply with pertinent provisions of Architectural Sections.

PART 2 - PRODUCTS

2.1 WASTE, VENT, SEWER AND STORM DRAINAGE

A. Above Grade

1. All waste, vent, sewer and storm lines shall be of cast iron soil pipe and fittings and shall conform to the requirements of CISPI Standard 301, ASTM A-888 or ASTM A-74 for all pipe and fittings. Pipe and fittings shall be marked with the collective trademark of the Cast Iron Soil Pipe Institute and be listed by NSF International.

    a. Acceptable Manufacturers:

        1. AB&I Foundry

        2. Charlotte Pipe and Foundry

        3. Tyler Pipe Company

    b. Joints

        1. Joints for hubless pipe and fittings shall conform to the manufacturer's installation instructions and local code requirements. Hubless coupling gaskets shall conform to ASTM Standard C-564 and be listed with NSF International. Couplings shall consist of a 304 stainless steel shields, clamp assembly and a high quality elastomeric gasket conforming to ASTM 564. Clamp shall be 4 band construction, Husky HD 4000 or approved equal.

    c. Mandatory Referenced Standards

        1. Cast Iron Soil Pipe Institute Standard Specifications - Latest Issue

            (a) CISPI 301: Hubless Cast Iron Soil Pipe and Fittings for Sanitary and Storm Drain, Waste, and Vent Piping Applications.

            (b) CISPI 310: Couplings for use in connection with Hubless Cast Iron Soil Pipe and Fittings for Sanitary and Storm Drain, Waste, and Vent Piping Applications.

        2. ASTM Standard Specifications - Latest Issue

            (a) A-888: Standard Specifications for Hubless Cast Iron Soil Pipe and Fittings.

            (b) C-564: Standard Specifications for Rubber Gaskets for Cast Iron Soil Pipe and Fittings.

B. Below Grade:

1. Schedule 40 Solid wall PVC plastic DWV pipe with solvent-cemented drainage pattern fittings complying with ASTM D 1785 - Latest Issue.

a. SCH. 40 Solid Core PVC plastic DWV pipe with solvent-cemented drainage pattern fittings complying with ASTM D 4396 may be used at Contractor's option for vent piping. - Latest Issue.

2. Schedule 40 Solid wall ABS plastic DWV pipe with solvent-cemented fittings complying with ASTM D-2661 - Latest Issue.

a. SCH. 40 Solid Core ABS plastic DWV pipe with solvent-cemented drainage pattern fittings complying with ASTM D 3965 may be used at Contractor's option for vent piping. - Latest Issue.

C. Condensate (sized per CMC) and indirect waste drains

1. Type L Copper Water Tube ASTM B88 with wrought Copper solder fittings, ANSI-B16.22

2.2 DOMESTIC WATER PIPING

A. Below Grade (Water Service)

1. 3" NPS and smaller, Schedule 40 PVC Plastic Pipe and fittings. ASTM D1785, D2466, with Solvent Cement Joints ASTM D2564.

2. 2" NPS and smaller, Type K Soft Annealed Temper Copper Tube ASTM B88 with Wrought Copper pressure fittings, ANSI B16.22. SIL-FOS - High temperature Brazing Metal Filler.

3. 4" NPS and larger, PVC AWWA C900 Class 100 Plastic Pipe with Dutile-Iron fittings AWWA C110, C111 or Elastomeric Gasket Joints

B. Above Grade (Distribution System)

1. Piping

a. For soldered, brazed and mechanical joints, 4" and smaller Copper Water Tube Type L Annealed Temper (Hard Drawn) ASTM B75 or ASTM B88.

2. Fittings

a. Wrought Copper Pressure Solder Fittings, ASME B16.22 or ASME B16-25, 95-5 Tin-Antimony Filler Metal.

b. Bronze Flanges: ASME B16.24, Class 150, with solder-joint ends.

c. Copper Unions: MSS SP-123, cast-copper alloy, hexagonal-stock body, with ball-and-socket, met-to-metal seating surfaces, and solder-joint or threaded ends.

d. Press Fitting: Copper press fittings shall conform to the material and sizing requirements of ASME B16.18 or ASME B16.22. O-rings for copper press fittings shall be EPDM. Press fittings shall have an inboard bead design.

1. Copper Press Fittings: Viega/Rigid Tool Company, NIBCO, Elkhart/Apollo Xpress or approved equal.
2. 2"NPS and smaller: Wrought copper fitting with EPDM-rubber O-ring seal in each end.
3. 2-1/2" to 4"NPS: Cast-bronze or wrought copper fitting with EPDM-rubber O-ring seal in each end.

C. Below Grade (Distribution System)

1. Piping

a. All underground water piping within the building boundaries shall be ASTM B88-93a Type "L" annealed (soft) copper tube made up without fittings below the floor level.

2.3 COMPRESSED AIR PIPING

A. Compressed air piping shall be ASTM-120-A53 black iron schedule 40 threaded steel pipe with ANSI B16 banded black malleable iron fittings.

B. Piping from the receiver to the first shut-off valve shall be schedule 80 threaded steel pipe.

C. Alternate 1: Type L Copper, hard drawn with wrought copper pressure fittings and 95-5 tin antimony filler metal.

D. Alternate 2: Victaulic Schedule 5 carbon steel with "Pressfit" fittings. Pipe shall be externally zinc electroplated. Fittings shall have grade "E" O-Rings. System to be rated for 300 psi service.

2.4 VALVES

A. Acceptable Manufacturers: Milwaukee, Hammond, NIBCO, Jomar, Watts, others as noted.

Type	Size Range	Part Number
Ball	2” and smaller (2 piece)	Milwaukee UPBA400 Hammond UP8301A NIBCO 585-80-LF
Ball	2-1/2” and larger (3 piece)	Milwaukee UPBA300 Hammond UP8604 NIBCO 595Y-LF
Note: Stem extensions of non-thermal-conductive material and protective sleeve that meets UL 2043 approved for inside air plenum and allows operation of the valve without breaking the vapor seal shall be used on insulated pipe. NIBCO NIB-Seal handle or acceptable equal.		
Gate	2” and smaller	Milwaukee UP115 Hammond UP645 NIBCO T-113-LF
Gate	2-1/2” or larger	NIBCO F-619-RW

Gate-Underground	3” and larger	Mueller A-2362 NIBCO F-619-RW
Check-Swing	2” and smaller	Milwaukee UP509 Hammond UP943 NIBCO 413Y-LF
Check-Spring	2” and smaller	Milwaukee UP548T NIBCO 480Y-LF
Check-Swing	2½” and larger	Apollo 61YLF NIBCO F-910-B-LF
Check-Spring	2-1/2” and larger	NIBCO F-938--33
Gas Cock (ball)	2” and smaller	Milwaukee BA475B Hammond 8901 NIBCO FP600
Gas Cock (plug)	1/2" to 4”	Homestead 611/612 Walworth 1796/1797 (with wrench)

B. All compressed air valves shall be ball valves specially made for compressed air service.

C. All pump discharges shall have a check value placed at a minimum of 5 pipe diameter from the pump.

1. NIBCO W920W or F910B
2. Acceptable equal.

D. All below grade ball valves shall have stainless steel handles.

2.5 HANGERS AND SUPPORTS

A. In general, all pipe hangers and supports shall conform to the following except where special pipe hangers and supports are detailed on the Drawings. In all cases hanger and support details on the Drawings shall take precedent over the following:

Items	TOLCO	Anvil
Pipe Hanger	1; 2; 200	260
Side Beam Clamp for Wood Joist	58	207
Beam Coupling for Steel Beams	65	92
Rod Coupling for Connection to “Hilti”	70	135
Inserts in Concrete Decks	107;109A;109AF	N/A
Trapeze Hangers	Tolstruct A12	AS200
Pipe Clamp	Tolco Cush Clamp	AS004OD – AS098OD

B. Similar items by Anvil International, Erico-Caddy, or TOLCO/B-Line will be acceptable.

C. Hanger Rods shall conform to the following table:

Tube/Pipe Size	Rod Diameter
1/2” to 4”	3/8”
5” to 8”	1/2”
10” to 12”	5/8”

D. Trapeze hangers may be used where parallel runs of pipe occur. All rods on trapeze hangers shall be 1/2" minimum size.

E. Hanger Support Spacing shall be as follows unless shown otherwise on the Drawings:

1. Horizontal:

   a. Cast Iron: Every other joint unless over 4 feet, then at every joint.

   b. Copper: Every 6 feet for 1-1/2 inch and smaller, and 10 feet for 2 inch and larger.

   c. Steel, Gas: Every 6 feet for 1/2 inch, 8 feet for 3/4 inch and 1 inch, and 10 feet for 1-1/4 inch and larger.

   d. Schedule 40 PVC or ABS DWV: Every 4 feet for all sizes. Provide for expansions every 30 feet.

2. Vertical:

   a. Cast Iron: Base and every floor not to exceed 15 feet.

   b. Copper: Every floor not to exceed 10 feet.

   c. Steel, Gas: Same as horizontal spacing except 1-1/4" and larger at every floor.

   d. Schedule 40 PVC or ABS DWV: Base and every floor with mid-floor guides. Provide for expansion every 30 feet.

F. Refer to the plumbing code for materials not listed above.

G. At all points where insulated pipe contacts a hanger or support, the point of contact shall be protected by a metal insulation pipe shield #B3153 as manufactured by B-Line. Equivalent pipe protectors will be considered provided the substitute item meets the same standard of quality and performance as the specified item.

H. Seismic restraint devices

1. Available Manufacturers:

   a. Anvil/Badger

   b. Mason Industries

   c. B-Line Tolco Division of Eaton

2. Seismic hanger system design shall meet the requirements of IBC, the 2022 CBC and ASCE 7-16.

2.6 WALL AND FLOOR PENETRATIONS

A. Fire walls and floors:

1. Wall and floor penetrations shall be protected with a U.L. approved fire rated system. The system shall be per the Drawing Details, or other manufacturer's installation instructions.

2. Fire stopping materials by Hilti, Metacaulk, or 3M are considered equal. The material shall be the same as called out for in the U.L. approved system.

B. Poured concrete walls and floors.

1. Pipes penetrating poured concrete walls and floors shall be protected by providing the following:

a. A Schedule 40 PVC sleeve one (1) size larger than the pipe or one quarter (1/4) inch of foam material wrapped around and secured to the pipe or packed and caulked with mineral wool.

b. Protection shall end flush with the wall or floor surface.

C. All walls and floors:

1. Piping passing through walls and floors exposed to view shall be provided with chrome plated split-ring escutcheon plates in finished areas. Brass or galvanized escutcheon plates may be used elsewhere.

2.7 FLASHING

A. All flashing shall be 4 lb. sheet lead and all vents penetrating the roof shall be flashed and counter-flashed. Stoneman Co. roof flashing assembly with 10" skirt or equal may be used.

B. The flashing for vents penetrating a metal roof shall have a corrosion resistant aluminum base compatible with the roofing system. A rubber type flashing by "Tech Specialties" shall be installed between the flashing and pipe.

C. For single ply roofing, provide flashing per roofing manufacturer recommendations or installation instructions.

2.8 VALVE BOXES

A. Brooks Products Inc., Christy Co., or equal with the word "Water" or "Gas" cast in cover as applicable.

2.9 CLEANOUTS

A. Provide cleanouts per Drawings and details on Drawings. Cleanouts as manufactured by J. R. Smith, Mifab, Wade, or Zurn are approved equals.

B. Cleanout tops to be installed with tamper-proof screws.

2.10 FLOOR DRAINS, FLOOR SINKS AND ROOF DRAINS

A. Provide drains as specified on the Plumbing Schedule. However, drains as manufactured by Watts, J.R. Smith, Mifab, Wade, or Zurn will be acceptable provided they are equal.

B. Floor sinks by Watts, J.R. Smith, Mifab, Wade, Zurn, or Commercial Enameling are acceptable provided they are equal.

2.11 WATER HAMMER ARRESTORS

A. Provide Watts #LF15M2, Wilkins Piston Model #1260XL, Sioux Chief #65X-X or equal, as sized on the Drawings or required by PDI. Install per manufacturer's instructions.

2.12 AUTOMATIC TRAP PRIMERS

A. Provide Precision Plumbing Products, J.R. Smith, Mifab or Sloan as specified on the Drawings. Install per manufacturer's instructions.

2.13 PLUMBING FIXTURES

A. Fixture locations, quantities, types, sizes and connections shall be as shown on both the Plumbing and Architectural Drawings. If a conflict in fixture location is noted between the Plumbing and Architectural Drawings, the Architectural Drawings shall take precedence.

B. Fixtures shall be thoroughly protected against damage to the chrome plate or enamel, by chipping, scratching or other damage during the entire period of construction. Roof drains, floor sinks and drains, toilet and sink drains, plumbing vents, and all other similar fixtures shall be covered to prevent trash from entering the pipes until final installation of grates, domes, fixtures or other protective devices.

C. Provide fixtures as specified in the Plumbing Schedule. American Standard, Crane, Kohler, or Just are acceptable substitutes as equal if approved by Engineer.

D. Fixture carrier numbers listed are as specified on the Plumbing Schedule; however, carriers as manufactured by J.R. Smith, Mifab, Wade, or Zurn, are acceptable provided they are equal.

2.14 CONNECTORS

A. Provide Brass Craft "Speedway" or equal heavy pattern iron pipe size brass stops, rigid or flexible supplies and chrome plated brass "P" traps. Stops in "Public" areas to have screwdriver slots and those in "Private" areas to have all cross handles.

B. Provide Brass Craft or equal flexible stainless steel braided water supplies to appliances. They may also be used to fixtures as an option to rigid supplies. Aquaflo is an acceptable substitute.

C. Provide Brass Craft flexible or equal, stainless steel gas appliance connectors. Dormont is an acceptable substitute. Diameter of connector

to be as recommended by manufacturer based on connector length and rated capacity of equipment.

2.15 ACCESS PANELS

A. See section 23 00 13 for access panels.

2.16 PRESSURE GAGES AND THERMOMETERS

A. Provide Marsh Quality gages or equal with 3-1/2" dial, gage cock, in type required. For pump suction, provide compound type.

B. Provide Trerice 7" BX or 3" Bimetal Dial series thermometers or equal, straight, angle, or oblique as required, equipped with separable sockets and well. Provide extension necks as required on insulated line.

C. Arrange gages and thermometers for easy reading.

2.17 PRESSURE REGULATORS AND BACKFLOW PREVENTORS

A. Provide the pressure regulator(s) and backflow preventer(s) as specified on the drawings and/or as required by the governmental authority having jurisdiction.

B. Pressure regulators and/or backflow preventers by Febco, Hersey, Watts or Wilkins are considered equal when their pressure fall-off/loss is equal to or less than the specified regulators/preventer's loss for the given flow rate.

C. Provide all potable water outlets with hose attachments with non-removable hose bibb backflow preventers per the C.P.C.

2.18 WATER HEATERS

A. Provide water heaters as specified in Plumbing Schedule or approved equal of size, capacity, recovery, and KW/BTUH input. American, A.O. Smith and State are considered equal. Heater shall be A.G.A. or U.L. listed.

1. Heater storage tank shall be provided with magnesium anodes, approved standard pressure/temperature relief valve and all standard factory trim.

2. Gas heaters shall be provided with an A.G.A. approved 100% safety shut-off.

3. Provide approved flexible copper supplies for the water heater water connections.

4. Instantaneous tankless water heaters shall be with water flow activated switch to energize the electrical/gas power source, a safety high water temperature limit, and all standard factory trim.

B. Provide a Smitty Co., Benjamin Co. with 1" drain outlet or equal, water heater pan as specified in the Water Heater Schedule.

2.19 PRESSURE-TEMPERATURE RELIEF VALVE

A. Pressure-temperature relief valve shall be Wilkins TP220, or TP3000 Series or equal.

2.20 EXPANSION TANK

A. Expansion tank shall be Wilkins WXTP series as specified on the Drawings or approved equal in size and capacity. Amtrol and Watts expansion tanks are considered equal.

2.21 WATER HEATER SEISMIC RESTRAINTS

A. Seismic restraints shall be Holdrite model QS-50 or QS-120 or approved equal as applicable for the water heater specified.

2.22 PROTECTIVE INSULATION (ADA FIXTURES)

A. Provide approved manufactured, EVA foam antimicrobial material protective pipe and fitting covering for exposed waste and drain assembly and for hot and cold water supplies and stops. Protective system shall consist of pre-formed pipe or tubing sleeve and pre-formed fitting patterns for trap and stops.

B. Provide protective covering for off-set drain assembly and disposer at kitchen sinks.

C. Foam pipe wrap, duct tape, baggy-type covers, tie-strap fasteners are not acceptable.

D. Acceptable manufacturers:

1. Oatey Dearborn “Safety Series”
2. Truebro “Lav-Guard”
3. Plumberex “Pro-Xtreme”

2.23 PIPE INSULATION

A. Article includes insulating the following plumbing piping services:

1. Domestic hot-water piping.
2. Domestic hot-water return piping, including the piping between where the return piping intercepts the domestic cold water supply piping and the water heater.
3. Domestic cold-water piping where the following conditions occur:
   a. Last 8 feet of piping to the water heater including piping between a storage tank and a heat trap, for a nonrecirculating storage system.
   b. Piping in unheated areas of the building.
   c. Piping exposed outside the building.

B. Domestic cold-water piping in unheated areas of the building and where exposed outside the building shall be insulated with 1” insulation. Where insulation is required in other areas the insulation shall conform to the requirements for domestic hot water supply and return piping.

C. Insulation material shall meet requirements of flame spread not to exceed 25 and smoke developed not to exceed 50 as tested by Procedure ASTM-E-84, NFPA 225 or UL 723.

D. Domestic hot water supply and return piping shall be insulated with Owens-Corning Fiberglass heavy density pipe insulation 25 ASJ/SSL-II (All Service Jacket/Double/ Self-Sealing Lap). Insulation shall have a k-factor of 0.24 @ 100 degrees F mean temperature, an embossed vapor barrier laminated and pressure sealing lap adhesive. All lap and butt strips shall have integral pressure-sensitive strips and shall be applied in strict accordance with manufacturer's instructions. Insulation thickness shall be as follows:

PIPE INSULATION THICKNESS							
FLUID OPERATING TEMPERATURE RANGE °F	INSULATION CONDUCTIVITY			NOMINAL PIPE DIAMETER IN INCHES			
	k FACTOR	MEAN RATING TEMPERATURE °F		< 1	1 to < 1.5	1.5 to < 4	4 to < 8
Service Water Heating Systems				Minimum Pipe Insulation Require (Thickness in inches or R-value)			
141-200	.25-.29	125	Inches	1.5	1.5	2.0	2.0
			R-Value	R-11.5	R-11	R-14	R-11
105-140	.22-.28	100	Inches	1.0	1.5	1.5	1.5
			R-Value	R-7.7	R-12.5	R-11	R-9

E. Insulation materials not meeting the specified conductivity range shall be submitted for approval. Submittal shall clearly identify compliance with this article.

2.24 CIRCULATION PUMP: (DOMESTIC)

A. Provide pump(s) per schedule. Bell and Gossett, Grundfos, Laing or March are considered equal.

2.25 AIR COMPRESSOR

A. Air Compressor unit shall be a factory-packaged assembly, including 3 phase, 208 volt motor controls, switches, wiring, accessories, and motor controllers, in a NEMA 250, Type 4 enclosure. Tank-mounted air compressors shall be manufactured to comply with UL listing requirements. Air compressors shall have manufacturer’s name and address, together with trade name, and catalog number on a nameplate securely attached to the equipment. Each compressor shall start and stop automatically at upper and lower pressure limits of the system. Each compressor motor shall be provided with an across-the-line-type magnetic controller, complete with low-voltage release. An intake air filter and

silencer shall be provided with each compressor. Aftercooler and moisture separator shall be installed between compressors and air receiver to remove moisture and oil condensates before the air enters the receiver. Aftercoolers shall be air type. The air shall pass through a sufficient number of tubes to affect cooling. Tubes shall be sized to give maximum heat transfer. Cooling capacity of the aftercooler shall be sized for the total capacity of the compressors. Means shall be provided for draining condensed moisture from the receiver by an automatic float type trap. Capacities of air compressors and receivers shall be as indicated. Compressors shall be two-state, V-belt drive, capable of operating continuously against their designed discharge pressure, and shall operate and discharge pressure indicated. Compressors shall be tank mounted. The compressor main bearings shall be either roller or ball. The discharge passage of the high pressure air shall be piped to the air receiver with a copper pipe or tubing. A pressure gauge calibrated to 15- psi and equipped with a gauge cock and pulsation dampener shall be furnished for installation adjacent to pressure switches.

B. Air Receivers: Receivers shall be designed for 200 psi working pressure. Receivers shall be factory air tested to 1-1/2 times the working pressure. Receivers shall be equipped with safety relief valves and accessories, including pressure gauges and automatic and manual drains. The outside of air receivers may be galvanized or supplied with commercial enamel finish. Receivers shall be designed and constructed in accordance with ASME BPV VIII Div 1 and shall have the design working pressures specified herein. A display of the ASME seal on the receiver or a certified test report from an approved independent testing laboratory indicating conformance to the ASME Code shall be provided.

C. Intake Air Supply Filter: Dry type air filter shall be provided having a collection efficiency of 99 percent of particles larger than 10 microns. Filter body and media shall withstand a maximum 862 kPa (125 psi), 125 psi, capacity as indicated.

D. Pressure Regulators: The air system shall be provided with the necessary regulator valves to maintain the desired pressure for the installed equipment. Regulators shall be designed for a maximum inlet pressure of 125 psi and a maximum temperature of 200 degrees F. Regulators shall be single-seated, pilot-operated with valve plug, bronze body and trim or equal, and threaded connections. The regulator valve shall include a pressure gauge and shall be provided with an adjustment screw for adjusting the pressure differential from 0 to 125 psi.

PART 3 - EXECUTION

3.1 GENERAL CONDITIONS

A. Examine the areas and conditions under which Work of this Section will be performed. Conditions detrimental to timely and proper completion of the Work shall be brought to the attention of the Architect before the

installation of materials. Do not proceed until unsatisfactory conditions are corrected. Incorrectly installed materials requiring changes will be at Contractor's expense.

B. All plumbing fixtures, appliances, and appurtenances furnished with manufacturer's installation instructions shall be installed per those instructions.

3.2 PLUMBING SYSTEM LAYOUT

A. Lay out the plumbing system in careful coordination with the Drawings. Determine proper elevations for all components of the system and use only the minimum number of bends to produce a satisfactorily functioning system.

B. Follow the general layout shown on the Drawings in all cases except where other Work may interfere.

C. Lay out pipes to fall within partitions, walls, or roof cavities, and to not require furring other than as shown on the Drawings.

3.3 PIPING INSTALLATION

A. Pipe sizes as shown on drawings are Nominal Pipe Size (NPS) or Iron Pipe Size (IPS). Drawings and fixture schedule indicate pipe sizing per the 2022 CPC and Standard Engineering Practice. Pipe sizes shall be maintained to fixtures, appliances and equipment. Approved reducing fittings shall be installed at all points of connections.

B. Install piping generally square with building, free of traps or air pockets, and true to line and grade. Keep all piping tight to the building structure, unless pipe slope is required. Do not install piping in any locations where, in the Architect's opinion, it will interfere with the use of the building or create a safety hazard. Where space is inadequate, notify the Architect in time to avoid unnecessary Work. Install all exposed piping as high as possible without interfering with other trades.

C. Make changes in direction with manufactured fittings; use long radius elbows. Street elbows, bushings, close nipples and bending of pipe or tubing will not be allowed.

D. Provide "P" traps at sanitary sewer drainage devices without integral traps.

E. Underground plastic pipe will horizontally transition to metal pipe 5 feet before the above ground riser. Install plastic pipe with a minimum of 36" of cover when located under areas of possible vehicle traffic. Approved metallic pipe must be used if the minimum depth is not met. A tracer wire, terminating at each end at an exposed location, will be installed with all underground plastic pipe.

1. Piping may terminate a maximum of one foot above ground when encased in a listed metallic transition riser.

F. Use friction wrenches when installing brass, polished, or soft metal piping, and when installing piping exposed in finished areas. Replace piping showing wrench marks.

G. Attach escutcheon plates to pipes with set screws or spring clamps with concealed hinges. Continue insulation through escutcheon plates.

H. Compressed air piping shall be adequately supported in a manner that eliminates all sags and bowing of the line. All horizontal runs shall be straight and sloped at 1% to the indicated drain. All branch or individual drop lines shall be taken off the top of their supply line.

I. General:

1. Proceed as rapidly as the building construction will permit.
2. Thoroughly clean items before installation. Cap pipe openings to exclude dirt until fixtures are installed and final connections have been made.
3. Cut pipe accurately, and work into place without springing or forcing, properly clearing windows, doors, and other openings. Excessive cutting or other weakening of the building will not be permitted.
4. Show no tool marks or threads on exposed plated, polished, or enameled connections from fixtures. Tape all finished surfaces to prevent damage during construction.
5. Provide sufficient swing joints, ball joints, expansion loops, and devices necessary for a flexible piping system, whether or not shown on the Drawings.
6. Support piping independently at pumps, coils, tanks, and similar locations, so that weight of pipe will not be supported by the equipment. Support the equipment independently from the pipe.
7. Pipe the drains from mechanical equipment, drip pans, relief valves, air vents and similar locations, to an open sight drain, floor drain, or other acceptable discharge point, and terminate with an air break or air gap per the 2022 CPC.
8. Securely bolt all equipment, isolators, hangers, and similar items in place.

3.4 PIPE SUPPORT INSTALLATION

A. Support pipes from structure with assemblies specified. Provide auxiliary members, anchors, guides, and sway braces necessary to maintain pipe alignment and prevent excessive movement or strain on piping system or components; allow for expansion and contraction of piping. Provide at least one hanger for each branch. Do not use powder driven fasteners, wire, perforated tape, nails, wood blocking, or other makeshift devices to support pipe.

B. Attach supports to structure with bolts, screws or concrete anchors, per support manufacturer's requirements.

3.5 JOINTS AND CONNECTIONS

A. Cut pipe shall be reamed to full inside diameter of pipe. Cut threads straight and true. Insure all filings have been removed from inside of the pipe. Apply liquid Teflon to male pipe threads and not inside fittings. Use graphite on cleanout plug threads.

B. Joints in cast iron "No-Hub" soil/waste pipe and fittings shall be made up with neoprene gaskets and stainless steel bands conforming to CISPI 310, torque to the manufacturer's specification with an approved torque wrench.

C. Joints in copper tube shall be made with 95-5 tin-antimony or lead-free solder, applied in strict accordance with the manufacturer's directions.

D. Dissimilar metals shall be isolated with dielectric couplings, "EPCO" or approved equal. Provide access panels at all hidden couplings.

E. All plastic pipe shall be joined in accordance with the manufacturer's recommendations for their pipe and IAPMO Installation Standard per the 2022 CPC.

F. Press Connections: Copper press fittings shall be made in accordance with the manufacturer's installation instructions. The tubing shall be fully inserted into the fitting and the tubing marked at the shoulder of the fitting. The fitting alignment shall be checked against the mark on the tubing to assure the tubing is fully engaged (inserted) in the fitting. The joints shall be pressed using the tool approved by the manufacturer.

G. Pipe Protection: Provide protection against abrasion where copper tubing is in contact with other building members by wrapping with an approved tape, pipe insulation or otherwise suitable method of isolation.

H. Penetration Protection: Provide allowance for thermal expansion and contraction of copper tubing passing through a wall, floor, ceiling or partition by wrapping with an approved tape or pipe insulation, or by installing through an appropriately sized sleeve. Penetrations of fire resistance rated assemblies shall maintain the rating of the assembly

3.6 SANITARY SEWER, VENT AND INDIRECT WASTE SYSTEM INSTALLATION

A. Install horizontal drainage piping at a minimum 2%, condensate 1%, slope unless otherwise noted. Where this is impractical notify the Architect before installing the pipes.

B. Install vent piping to drain back into the sewer system.

C. Provide cleanouts where shown on Drawings and where required by governmental agencies having jurisdiction.

1. All cleanouts to grade shall be firmly secured by means of a concrete block 20" square by 5" thick, and shall be flush with finished grade, unless otherwise noted on the plans.

D. Provide automatic trap primers as specified at floor sinks and drains as indicated on Drawings or where required by governmental agencies having jurisdiction. Provide access panels for all hidden mechanical trap primers.

3.7 VALVE INSTALLATION

A. Provide valves in the water, air, and gas systems. Locate and arrange so as to give a complete regulation of apparatus, equipment, and fixtures.

B. Provide valves in at least the following locations:

1. In branches and/or headers of water piping serving a group of fixtures.
2. On both sides of apparatus and equipment.
3. For shutoff of risers and branch mains.
4. For flushing and sterilizing the system.
5. Where shown on the Drawings.

C. Locate valves for easy accessibility and maintenance. Provide access panels for all hidden valves.

D. Unions shall be installed downstream of all screwed valves.

E. All gas pressure regulating valves shall be vented to the atmosphere.

3.8 CLEANOUTS:

A. Horizontal drainage pipe shall be provided with a cleanout at its upper terminal, and each run of piping, that is more than 100 feet in total developed length, shall be provided with a cleanout for each 100 feet, or fraction therof, in length of such piping. An additional cleanout shall be provided in a drainage line for each aggregate horizontal change in direction exceeding 135 degrees. A cleanout shall be installed above the fixture connection fitting, serving each urinal, regardless if the location of the urinal in the building.

1. Exceptions – See 2022 CPC 707.4

3.9 WATER HAMMER ARRESTOR INSTALLATION

A. Provide water hammer arrestor on hot and cold water lines.

1. Install at all quick closing valves, solenoids, and supply headers at plumbing fixture groups.
2. Locate and size as shown on Drawings, and where not shown, locate in accordance with Plumbing and Drainage Institute Standard WH-201.

3. Install water hammer arrestor behind access panels.

3.10 BACKFLOW PREVENTION INSTALLATION

A. Protect plumbing fixtures, faucets, hose connections, and other equipment having plumbing connection, against possible back-siphonage.

B. Arrange for testing of backflow devices as required by the governmental agencies having jurisdiction.

3.11 PLUMBING FIXTURE INSTALLATION

A. Connect plumbing services to fixtures as shown on Drawings and as specified.

B. Install compression stops and flexible supplies per fixture manufacturer's recommendation or as high as possible on wall directly below fixtures.

C. Install fixtures at right angles to, and tightly against, building surfaces, and in proper alignment. Fill gaps between fixtures and building surfaces with white grout. Mounting heights and locations shall be as shown on the Drawings, or, if not shown, as directed by the Architect.

3.12 INSULATION INSTALLATION

A. Clean and dry surfaces prior to application of insulation or adhesives.

B. Insulate piping, fittings, valves, and strainers. Leave unions exposed. Where insulation terminates, bevel ends of insulation and continue jacket over insulation and secure to pipe. Do not interrupt insulation at hangers, supports, clamps, or penetrations through structure. Fittings shall be finished with "Zeston" or approved equal fitting closures. If fitting closures not available, use 8 oz. canvas dipped in "Seal-Fas".

C. Attach longitudinal jacket laps and butt strips with factory applied pressure sensitive adhesive. On concealed piping only, outward clinching coated staples at two inch spacing may be used. Cover elbows with one piece polyvinyl chloride covers. Secure with tack fasteners. Tape ends of covers with matching tape on exposed piping. Seal off all cut ends with canvas and Benjamin Foster 30-36.

D. Install closed cell polyethylene foam per manufacturers instructions.

3.13 TESTING AND ADJUSTING

A. Provide personnel and equipment, and arrange for and pay the costs of, all required tests and inspections required by governmental agencies having jurisdiction. See Section 23 00 13 for test requirements.

B. Where tests show materials or workmanship to be deficient, replace or repair as necessary, and repeat the tests until the specified standards are achieved.

C. Adjust the system to optimum standards of operation.

3.14 CLEANING (FOR POTABLE WATER SYSTEMS.)

A. Disinfection: The hot and cold water distribution system shall be disinfected prior to being placed in service. The system shall be disinfected within 3 weeks of occupancy in accordance with AWWA C651 or the following requirements:

1. The piping system shall be flushed with potable water until discolored water does not appear at any of the outlets.

2. The system shall be filled with a water chlorine solution containing at least 50 parts per million of chlorine. The system shall be valved off and allowed to stand for 24 hours. Or, the system shall be filled with a water chlorine solution containing at least 200 parts per million of chlorine. The system shall be valved off and allowed to stand for 3 hours.

   a. To prevent reduced service life of system components, disinfection solutions should not stand in the system longer than 24 hours.

3. Following the standing time, the system shall be flushed with water until the chlorine is purged from the system.

4. Provide bacteriological sampling and analysis results to the Engineer for review.

3.15 **WARRANTY**

A. The contractor shall warranty all of the systems for proper operation installed by the contractor for not less than one calendar year from date of project completion. This completion date shall be set by the Architect or owner.

END OF SECTION 22 00 00

SECTION 221113 –

FACILITY WATER AND SEWER SERVICE

PART 1 - GENERAL

1.1 RELATED DOCUMENTS

A. Drawings and general provisions of Contract, including General and Supplementary Conditions and Division 01 Specification Sections, apply to this section and all other sections of Division 22.

1.2 SUMMARY

A. This Section includes the requirements for potable water service, sanitary and storm water piping and specialties below grade from five (5) feet outside the building to the points of connection to meter vaults and to the municipal utilities and includes the following**:**

1. Cast iron pipe and fittings.
2. Ductile iron pipe and fittings.
3. Copper pipe and fittings.
4. Transition couplings.
5. Cleanouts.
6. Sanitary Floor Drains
7. Concrete.
8. Piping specialties.
9. Encasement for underground metal piping.
10. Gate valves.
11. Gate valve accessories and specialties.
12. Water meters and vaults.
13. Water meter boxes.
14. Sterilization of Potable Water Systems.

1.3 ACTION SUBMITTALS

A. Product Data: For each specified product, include manufacturers cut sheets, dimensional data, performance data, installation instructions, specified options, and warranty information.

B. Shop Drawings: Provide details for precast concrete manholes and meter vault assemblies and indicate dimensions, method of field assembly, and components.

1.4 INFORMATIONAL SUBMITTALS

A. Coordination Drawings: For piping and specialties including relation to other services in same area, drawn to scale. Show piping and specialty sizes and valves, meter and specialty locations, and elevations.

B. Field quality control test reports.

1.5 CLOSEOUT SUBMITTALS

A. Operation and Maintenance Data: Include a copy each approved submittal along with any applicable maintenance data in the project operation and maintenance manual.

1.6 COORDINATION

A. Coordinate the installation of the potable water, sanitary, and storm water service mains with the Baltimore City Department of Public Works (BCDPW) all other trades that have work close to and/or in the same area of the project site.

1.7 QUALITY ASSURANCE

A. Service Components and Accessories: All utility service components and accessories shall be installed using new materials designed and built in accordance with the best practices of the industry. Each major item or material shall bear the manufacturer's name and nominal size, if applicable.

B. Installing Contractor: The contractor installing the exterior water mains, including the backflow assembly, gate valve, sanitary mains, storm water mains, related manholes and the connections to the city utilities except **"Water Meter"** line from the water main that needs to be installed by **Ventura Wate**r.

C. Contractor shall have Class A license or specific Class C-34, C-36, C-42 equivalent that approved by City Engineer.

D. Regulatory Requirements:

1. Comply with City of Ventura Construction Standard and Ventura Water supplying water
2. Comply with standards of authorities having jurisdiction for fire suppression water service piping, including materials, hose threads, installation, and testing.

E. Piping materials shall bear label, stamp, or other markings of specified testing agency.

F. NSF Compliance:

1. Comply with NSF 61 for materials for water service piping and specialties for domestic water.

1.8 DELIVERY, STORAGE, AND HANDLING

A. Preparation for Transport: Prepare valves, including fire hydrants, according to the following:

1. Ensure that valves are dry and internally protected against rust and corrosion.
2. Protect valves against damage to threaded ends and flange faces.
3. Set valves in best position for handling. Set valves closed to prevent rattling.

B. During Storage: Use precautions for valves, including fire hydrants, according to the following:

1. Do not remove end protectors unless necessary for inspection; then reinstall for storage.
2. Protect from weather. Store indoors and maintain temperature higher than ambient dew point temperature. Support off the ground or pavement in watertight enclosures when outdoor storage is necessary.

C. Handling: Use sling to handle valves and fire hydrants if size requires handling by crane or lift. Rig valves to avoid damage to exposed parts. Do not use handwheels or stems as lifting or rigging points.

D. Deliver piping with factory applied end caps. Maintain end caps through shipping, storage, and handling to prevent pipe end damage and to prevent entrance of dirt, debris, and moisture.

E. Protect stored piping from moisture and dirt. Elevate above grade. Do not exceed structural capacity of floor when storing inside a building.

F. Protect flanges, fittings, and specialties from moisture and dirt.

1.9 PROJECT CONDITIONS

A. Interruption of Existing Utility Services: Do not interrupt existing utility services (water, sanitary and/or storm water) to facilities occupied by Ventura Water or others unless permitted under the following conditions and then only after arranging to provide temporary utility services according to requirements indicated:

1. Notify Ventura Water of Facilities Management no fewer than ten (10) working days in advance of proposed interruption of existing utility services.
2. Do not proceed with interruption of existing utility services without written permission from Ventura Water or Ventura Public Work .

1.10 WARRANTY AND GUARENTEE

A. Comply with Section 220000 “Basic Mechanical Requirements – Plumbing” for warranty and guarantee requirements.

PART 2 - PRODUCTS

2.1 GENERAL PRODUCT REQUIREMENTS

A. Material Design and Selection: Facility water, drainage and sewer pipe, fittings, and specialties shall be designed and selected, for the intended use, in accordance with the sizes on the drawings and the requirements of this specification.

B. Acceptable Manufacturers:

1. Ductile Iron Water Service Pipe: All ductile iron pipe and fittings shall be by one

(1) of the following manufacturers:

a. American (American Cast Iron Pipe Company).
b. US Pipe Company.
c. Atlantic States Cast Iron Pipe Company.

2. HDPE/PVC Sanitary and Storm Water Pipe - Hub and Spigot PVC Piping System: All PVC/HDPE and fittings shall be by one (1) of the following manufacturers:
   a. Acrylonitrile Butadiene Styrene (ABS)

3. Water Service Valves: All water service valves exterior to the building shall be by one (1) of the following manufacturers:

   a. American (American Cast Iron Pipe Company).
   b. US Pipe Company.
   c. Atlantic States Cast Iron Pipe Company.

4. Cleanouts: All cleanouts exterior to the building shall be by one (1) of the following manufacturers:

1. Josam Company.
2. Smith, Jay R. Mfg. Co.
3. Tyler Pipe.
4. Zurn Specification Drainage Operation; Zurn Plumbing Products Group.

C. PIPE APPLICATION SCHEDULE

Pipe System	**Pipe Material**	**Fitting Material**	**Joint Material**
Sanitary Piping Mains Below Grade from five feet beyond the building to the municipal utilities.	ASTM D 3034, SDR 35, PVC	ASTM D 3034, PVC with bell ends	Gaskets: ASTM F 477, elastomeric seals
Potable Water Service Piping Systems Below Grade five feet beyond the building to the Meter	Copper Tube: Piping 3/4 inch to 2 inches: ASTM B88, Type 'L', Seamless, Water Tube, hard drawn temper.	Copper Fittings: 3/4 inch to 2 inch, ASTME B16.22, wrought copper or copper alloy solder joint, 150 lb.	ASTM B32, alloy Sb5 (95 percent tin, and 5 % antimony), with 0.2 % maximum lead content

Potable Water Service Piping Mains Below Grade from five (5) feet beyond the building to connections the Meter Vault	Piping 2-1/2 inch and larger: Ductile Iron: AWWA C151/A21.15 or AWWA C104 cement mortar lining. or C900 PVC or Class 305 DR14	Piping 2-1/2 inch and larger: Ductile Iron: AWWA C110 or AWWA C153/A21.53 with AWWA C104 cement mortar lining.	Push on or mechanical joints and gaskets: Joints - AWWA C151, Gaskets - AWWA C111/A21.11, rubber.

2.2 NON PRESSURE TYPE TRANSITION COUPLINGS

A. Comply with ASTM C 1173, elastomeric, sleeve type, reducing or transition coupling, for joining underground non-pressure piping. Include ends of same sizes as piping to be joined and corrosion resistant metal tension band and tightening mechanism on each end.

B. Sleeve Materials:

1. For Cast Iron Soil Pipes: ASTM C 564, rubber.
2. For Concrete Pipes: ASTM C 443, rubber.

2.3 CLEANOUTS

1. Description: cast iron frame and cover Alhambra or Foundry No. A-1241 or Pamrex, or equivalent

2. Top Loading Classification(s): Heavy Duty

3. Sewer Pipe Fitting and Riser to Cleanout: ASTM A 74, Service class, cast-iron soil pipe and fittings.

2.4 Sanitary Clarifier, Wash Down and Diversion System

A. Standard Precast Concrete Clarifier: Jensen Precast Concrete CL 750 or approved and equal as shown on Sheet 11 of Drawing No. 2025-D-010

2.5 WASH DOWN AND DIVERSION SYSTEM

a. Fox Environmental systems

2. Description: The system consists of a 210V, 10-amp control panel box connected to a sewer chamber. The chamber features a 470mm grate box and has a 1/2" copper tubing connected to the Fox demand valve on the control box, along with a 90-degree joint fitting for disconnection. A Fox Model DV stormwater diversion valve is located at the bottom of the sewer chamber to redirect the sewer flow away from runoff..

2.6 CONCRETE

A. General: Cast-in-place concrete complying with ACI 318, ACI 350/350R, and the following:

1. Cement: ASTM C 150, Type II.
2. Fine Aggregate: ASTM C 33, sand.
3. Coarse Aggregate: ASTM C 33, crushed gravel.
4. Water: Potable.

B. Portland Cement Design Mix: 4,000 psi minimum, with 0.45 maximum water/cementitious materials ratio.
   1. Reinforcing Bars: ASTM A 615/A 615M, Grade 60 (420 MPa) deformed steel.

C. Concrete Washdown area: Field formed from concrete. Portland cement design mix, 4000 psi minimum, 0.45 water ratio, for a 12" thick concrete base at concrete class 560-C-3250.
   1. Slope: 1 to 2 percent.

2.7 JOINING MATERIALS

A. Refer to Section "Common Work Results for Utilities" for commonly used joining materials.

2.8 PIPING SPECIALTIES

A. Transition Fittings: Manufactured fitting or coupling same size as, with pressure rating at least equal to and ends compatible with, piping to be joined.

B. Dielectric Fittings:

1. General Requirements: Assembly of copper alloy and ferrous materials with separating nonconductive insulating material. Include end connections compatible with pipes to be joined.

2. Dielectric Unions:

a. Description:

1) Standard: ASSE 1079.
2) Pressure Rating: 125 psig minimum at 180°F.
3) End Connections: Solder joint copper alloy and threaded ferrous.

3. Dielectric Flanges:

a. Description:
1) Standard: ASSE 1079.
2) Factory fabricated, bolted, companion flange assembly.
3) Pressure Rating: 125 psig minimum at 180°F.
4) End Connections: Solder joint copper alloy and threaded ferrous; threaded solder joint copper alloy and threaded ferrous.

4. Dielectric-Flange Insulating Kits:

a. Description:
1) Non conducting materials for field assembly of companion flanges.
2) Pressure Rating: 150 psig.
3) Gasket: Neoprene or phenolic.
4) Bolt Sleeves: Phenolic or polyethylene.
5) Washers: Phenolic with steel backing washers.

5. Dielectric Nipples:

a. Description:
1) Standard: IAPMO PS 66
2) Electroplated steel nipple complying with ASTM F 1545.
3) Pressure Rating: 300 psig at 225°F.
4) End Connections: Male threaded or grooved.
5) Lining: Inert and noncorrosive, propylene.

2.9 CORROSION PROTECTION PIPING ENCASEMENT

A. Encasement for Underground Metal Piping:

1. Standards: ASTM A 674 or AWWA C105.
2. Form: Sheet or tube.
3. Material: LLDPE film of 0.008 inch min mum thickness.

2.10 GATE VALVES

A. AWWA, Cast Iron Gate Valves: Provide gate valves exterior piping in accordance with the City of Ventura Construction Standard Details.

2.11 GATE VALVE ACCESSORIES AND SPECIALTIES

A. Gate Valve Accessories and Specialties: Provide gate valve accessories and specialties in accordance with the approval by Ventura Water or City Engineer for tapping sleeve assemblies, and valve boxes.

2.12 WATER METERS

Contractor shall fill out the form of Collectible Work Sheet for Ventura Water to coordinate the time for Ventura Water to install the water meter on the selected spot per Drawing No. 2025-D-010.

2.13 STERILIZATION OF POTABLE WATER SERVICE

A. See Division 22 Specification Section "Sterilization of Potable Water Systems" for cleaning and sterilizing the potable water service piping to the building.

PART 3 - EXECUTION

3.1 EARTHWORK

A. Comply with excavating, trenching, and backfilling requirements in Specification Section 908 “Earth Work”.

3.2 PIPING APPLICATIONS FOR POTABLE WATER

A. General: Use pipe, fittings, and joining methods for piping systems according to the following applications.

B. Transition couplings and special fittings with pressure ratings at least equal to piping pressure rating may be used, unless otherwise indicated.

C. Do not use flanges or unions for underground piping.

D. Flanges, unions, grooved end pipe couplings, and special fittings may be used, instead of joints indicated, on aboveground piping and piping in vaults.

E. Underground water service piping NPS 3/4 to NPS 3 shall be the following:

1. Soft copper tube, ASTM B 88, Type L; wrought copper, solder joint fittings; and brazed joints.

F. Underground water service piping NPS 4 to NPS 8 shall be any of the following:

1. Ductile iron, push on joint pipe; ductile iron, push on joint fittings; and gasketed or mechanical joint pipe; ductile iron, mechanical joint fittings; joints.

3.3 VALVE APPLICATIONS

A. General Application: Use mechanical joint end valves for NPS 3 and larger underground installation. Use threaded or flanged end valves for installation in vaults. Use UL/FMG, Nonrising stem gate valves for installation with indicator posts.

3.4 PIPING INSTALLATION FOR POTABLE WATER

A. Water Main Connection: To be done by Ventura Water with coordination.

B. Comply with NFPA 24 for fire service main piping materials and installation.

1. Install PE corrosion protection encasement according to ASTM A 674 or AWWA C105.
2. Install copper tube and fittings according to CDA's "Copper Tube Handbook."

C. Install ductile iron, water service piping according to AWWA C600 and AWWA M41.

D. Install PE corrosion-protection encasement according to ASTM A 674 or AWWA C105.

E. Bury piping with depth of cover over top at least thirty (30) inches, with top at least twelve (12) inches below level of maximum frost penetration, and according to the following:

1. Under Driveways: With at least thirty six (36) inches cover over top.
2. In Loose Gravelly Soil and Rock: With at least twelve (12) inches additional cover.

F. Install piping by tunneling or jacking, or combination of both, under streets and other obstructions that cannot be disturbed.

G. Extend water service piping and connect to water-supply source and building water piping systems at outside face of building wall in locations and pipe sizes indicated.

1. Terminate water service piping at building wall until building water piping systems are installed. Terminate piping with caps, plugs, or flanges as required for piping material. Make connections to building water piping systems when those systems are installed.

H. Sleeves are specified in Division 22 Specification Section "Sleeves, Sleeve Seals and Escutcheons for Plumbing Piping."

I. Mechanical sleeve seals are specified in Division 22 Specification Section "Sleeves, Sleeve Seals and Escutcheons for Plumbing Piping."

J. Install underground piping with restrained joints at horizontal and vertical changes in direction. Use restrained joint piping, thrust blocks, anchors, tie rods and clamps, and other supports.

3.5 PIPING INSTALLATION

A. General Locations and Arrangements: Drawing plans and details indicate general location and arrangement of underground sanitary sewer and storm drain piping. Location and arrangement of piping layout take into account design considerations. Install piping as indicated, to extent practical. Where specific installation is not indicated, follow piping manufacturer's written instructions.

B. Install piping beginning at low point, true to grades and alignment indicated with unbroken continuity of invert. Place bell ends of piping facing upstream. Install gaskets, seals, sleeves, and couplings according to manufacturer's written instructions for using lubricants, cements, and other installation requirements.

C. Install cleanout for changes in direction unless fittings are indicated. Use fittings for branch connections unless a direct tap into the existing sewer is indicated.

D. Install proper size increasers, reducers, and couplings where different sizes or materials of pipes and fittings are connected. Reducing size of piping in direction of flow is prohibited.

E. Install gravity flow, nonpressure, sewer and drainage piping according to the following:

1. Install piping pitched down in direction of flow, at minimum slope of 1% unless otherwise indicated.
2. Install piping shall meet with City Standard 112 and 113
3. Sewer Pipe shall be SDR 35 PVC

4. Sewer clarifier pipe shall install equivalent PVC shall meets the ASTM D 2321 and ASTM F 1668.

F. Clear interior of piping and cleanout of dirt and superfluous material as work progresses. Maintain swab or drag in piping, and pull past each joint as it is completed. Place plug in end of incomplete piping at end of day and when work stops.

3.6 CLARIFIER INSTALLATION

A. Install precast concrete clarifier according to ASTM C891 “Standard Practice for Installation of Underground Precast Concrete Utility Structures”.

B. Install clarifier at the level.

C. Connect clarifier to the concrete ballast pad.

D. Install filter in Clarifier outlet. Secure the filter to the clarifier wall. Make direct connections to distribution piping.

E. Install insulation on exterior sides and top of the clarifier. Comply with requirements for insulation specified in Section 220716 "Plumbing Equipment Insulation."

F. Install manhole cover inserts in frame and immediately below the cover.

3.7 CONCRETE PLACEMENT

A. Place cast in place concrete according to ACI 318.

3.8 CLEANOUT INSTALLATION

A. Install cleanouts and riser extensions from sewer pipes to cleanouts at grade. Use cast iron soil pipe fittings in sewer pipes at branches for cleanouts, and use cast iron soil pipe for riser extensions to cleanouts. Install piping so cleanouts open in direction of flow in sewer pipe.
   1. Use Heavy Duty, top loading classification cleanouts in Fire Truck service areas.

B. Set cleanout frames and covers in earth in cast in place concrete block, eighteen (18) inches by eighteen (18) inches by twelve (12) inches deep. Set with tops one (1) inch above surrounding grade.

C. Set cleanout frames and covers in concrete pavement and roads with tops flush with pavement surface.

3.9 JOINT CONSTRUCTION

A. Make pipe joints according to the following:

   1. Copper Tubing, Pressure Sealed Joints: Use proprietary crimping tool and procedure recommended by copper, pressure seal fitting manufacturer.

2. Ductile Iron Piping, Gasketed Joints for Water Service Piping: AWWA C600 and AWWA M41.
3. Ductile Iron Piping, Gasketed Joints for Fire Service Main Piping: UL 194.
4. Ductile Iron Piping, Grooved Joints: Cut groove pipe. Assemble joints with grooved end, ductile iron piping couplings, gaskets, lubricant, and bolts according to coupling manufacturer's written instructions.
5. Install dielectric fittings in piping at connections of dissimilar metal piping and tubing.

    a. Dielectric Fittings for NPS 2 and Smaller: Use dielectric nipples.
    b. Dielectric Fittings for NPS 2-1/2 to NPS 4: Use dielectric flanges.

3.10 Dielectric Fittings for NPS 5 and Larger: Use dielectric flange kits .ANCHORAGE INSTALLATION

A. Anchorage, General: Install water distribution piping with restrained joints. Anchorages and restrained joint types that may be used include the following:

1. Concrete thrust blocks.
2. Locking mechanical joints.
3. Set screw mechanical retainer glands.
4. Bolted flanged joints.
5. Heat fused joints.
6. Pipe clamps and tie rods.

B. Install anchorages for tees, plugs and caps, bends, crosses, valves, and hydrant branches. Include anchorages for the following piping systems:

1. Gasketed Joint, Ductile Iron, Water Service Piping: According to AWWA C600.
2. Fire Service Main Piping: According to NFPA 24.

C. Apply full coat of asphalt or other acceptable corrosion resistant material to surfaces of installed ferrous anchorage devices.

3.11 VALVE INSTALLATION

A. AWWA Gate Valves: Comply with AWWA C600 and AWWA M44. Install each underground valve with stem pointing up and with valve box.

B. AWWA Valves Other Than Gate Valves: Comply with AWWA C600 and AWWA M44.

C. UL/FMG, Gate Valves: Comply with NFPA 24. Install each underground valve and valves in vaults with stem pointing up and with vertical cast iron indicator post.

D. UL/FMG, Valves Other Than Gate Valves: Comply with NFPA 24.

E. MSS Valves: Install as component of connected piping system.

F. Corporation Valves and Curb Valves: Install each underground curb valve with head pointed up and with service box.

3.12 BACKFLOW INSTALLATION

A. Install backflow assembly according to City's Construction Detail 010.

3.13 CONCRETE VAULT INSTALLATION

A. Install precast concrete vaults according to ASTM C 891 and in accordance with the BCDPW Specifications and Standard Details

3.14 CONNECTIONS

A. Connect water-distribution piping to interior domestic water and fire-suppression piping.

B. Ground equipment according to Division 26, Specification Section "Grounding and Bonding for Electrical Systems."

C. Connect wiring according to Division 26, Specification Section "Low-Voltage Electrical Power Conductors and Cables."

3.15 CONNECTIONS FOR STORM AND SEWER PIPING

A. Connect non-pressure, gravity flow drainage piping to the building's sanitary building drains

B. Make connections to existing piping and underground manholes.

1. Use commercially manufactured wye fittings for piping branch connections. Remove section of existing pipe, install wye fitting into existing piping, and encase entire wye fitting plus six (6) inch overlap with not less than six (6) inches of concrete with twenty eight (28) day compressive strength of 3,000 psi.

2. Make branch connections from side into existing piping, NPS 4 to NPS 20. Remove section of existing pipe, install wye fitting into existing piping, and encase entire wye with not less than six (6) inches of concrete with twenty eight (28) day compressive strength of 3,000 psi.

C. Make branch connections from side into existing piping, NPS 21 or larger, or to underground manholes by cutting opening into existing unit large enough to allow three (3) inches of concrete to be packed around entering connection. Cut end of connection pipe passing through pipe or structure wall to conform to shape of and be flush with inside wall unless otherwise indicated. On outside of pipe or manhole wall, encase entering connection in six (6) inches of concrete for minimum length of twelve (12) inches to provide additional support of collar from connection to undisturbed ground.

1. Use concrete that will attain a minimum twenty eight (28) day compressive strength of 3,000 psi unless otherwise indicated.
2. Use epoxy-bonding compound as interface between new and existing concrete and piping materials.
3. Protect existing piping and manholes to prevent concrete or debris from entering

while making tap connections. Remove debris or other extraneous material that may accumulate.

D. Connect to bioswale and sewer clarifier aaccording to the Sheet 10 of Drawing 2025-d-010.

3.16 FIELD QUALITY CONTROL

A. Piping Tests:

B. Prepare and submit test reports.

3.17 IDENTIFICATION

A. Install continuous underground detectable warning tape during backfilling of trench for underground water distribution piping. Locate below finished grade, directly over piping. Underground warning tapes are specified in Division 31 Specification Section "Earth Moving."

B. Permanently attach equipment nameplate or marker indicating plastic water service piping, on main electrical meter panel. See Division 33 Specification Section "Common Work Results for Utilities" for identifying devices.

3.18 FIELD QUALITY CONTROL FOR STORM AND SEWER PIPING

A. Inspect interior of piping to determine whether line displacement or other damage has occurred. Inspect after approximately twenty four (24) inches of backfill is in place, and again at completion of Project.

1. Submit separate report for each system inspection.
2. Defects requiring correction include the following:

    a. Alignment: Less than full diameter of inside of pipe is visible between structures.
    b. Deflection: Flexible piping with deflection that prevents passage of ball or cylinder of size not less than 92.5% of piping diameter.
    c. Damage: Crushed, broken, cracked, or otherwise damaged piping.
    d. Infiltration: Water leakage into piping.
    e. Exfiltration: Water leakage from or around piping.

3. Replace defective piping using new materials, and repeat inspections until defects are within allowances specified.
4. Reinspect and repeat procedure until results are satisfactory.

B. Test new piping systems, and parts of existing systems that have been altered, extended, or repaired, for leaks and defects.

1. Do not enclose, cover, or put into service before inspection and approval.
2. Test completed piping systems according to requirements of authorities having jurisdiction.

3. Schedule tests and inspections by authorities having jurisdiction with at least twenty four (24) hours' advance notice.
4. Submit separate report for each test.
5. Hydrostatic Tests: Test sanitary sewerage according to requirements of authorities having jurisdiction and the following:

    a. Fill sewer piping with water. Test with pressure of at least ten (10) foot head of water, and maintain such pressure without leakage for at least four (4) hours.
    b. Close openings in system and fill with water.
    c. Purge air and refill with water.
    d. Disconnect water supply.
    e. Test and inspect joints for leaks.

6. Air Tests: Test sanitary sewerage according to requirements of authorities having jurisdiction, UNI-B-6, and the following:
    a. Option: Test plastic gravity sewer piping according to ASTM F 1417.
    b. Option: Test concrete gravity sewer piping according to ASTM C 924.

C. Leaks and loss in test pressure constitute defects that must be repaired.

D. Replace leaking piping using new materials, and repeat testing until leakage is within allowances specified.

END OF SECTION 221113

SECTION 221323 –

SANITARY CLARIFIER

PART 1 - GENERAL

1.01 SUMMARY

A. Section Includes:

Jensen Precast Concrete Septic tanks or equivalent

Pipe and Fitting

CONCRETE CLARIFIER

A. Description: ASTM C 1227, precast, reinforced-concrete tank and covers; single chamber, single chamber with internal baffle, or two chambers.

B. Design: For A-8 (H10-44), A-12 (HS15-44), or A-16 (HS20-44) traffic loading according to ASTM C 890.

C. Manholes: 24-inch- (610-mm-) minimum diameter opening with reinforced-concrete risers to grade and access lid with steel lift rings. Include manhole in center of each septic tank compartment top.

D. Filter Access: Reinforced-concrete access hole, large enough to remove filter, over filter position.

E. Inlet and Outlet Access: 2 4 -inch minimum diameter, reinforced-concrete access lids with steel lift rings. Include access centered over the inlet and outlet.

F. Resilient Connectors: ASTM C 923 (ASTM C 923M), of size required for piping, fitted into inlet and outlet openings.

G. Capacity and Characteristics:
- Capacity:750 Gallon.
- Inlet and Outlet Size: **4-inch**.

PVC DISTRIBUTION PIPE AND FITTINGS

Pipe and Fittings: ASTM D3034 “Standard Specification for Poly (Vinyl Chloride) (PVC) Sewer Pipe and Fittings” .

PART 2 - EXECUTION

2.01 EARTHWORK

A. Excavating, trenching, and backfilling for pipeline are specified in Section 908 "Earthwork"

B. Stockpile topsoil for reuse in finish grading without intermixing with other excavated material.

Stockpile materials away from edge of excavation and do not store within drip line of the remaining trees.

C. Place, grade, and shape stockpiles to drain surface water. Cover to prevent windblown dust.

D. Excavating and Backfilling for Clarifier**:**

1. Excavate sufficient width and length for tanks to the depth determined by the tank inlet elevation. At the bottom of the tank, provide a 1-inch layer of gravel to a depth of 24 inches.
2. Backfill with excavated soil; mounding soil above the original grade shall comply with Section 907 Earthsystem and Section Concrete Pavement.

2.02 SEWER CLARIFIER INSTALLATION

A. Install precast concrete interceptors according to ASTM C891 “Standard Practice for Installation of Underground Precast Concrete Utility Structures”.

B. Install interceptors at the level.

C. Connect clarifier to the concrete ballast pad.

D. Install filter in Clarifier outlet. Secure the filter to the Clarifier wall. Make direct connections to distribution piping.

E. Install insulation on exterior sides and top of the Clarifier. Comply with requirements for insulation specified in Section 220716 "Plumbing Equipment Insulation."

2.02 PIPING INSTALLATION

Comply with requirements for sewer pipe installation specified in Section 221313 "Facility Sanitary Sewers."
Install distribution piping according to the following:

- PVC Sewer Pipe and Fittings: ASTM D3034 “Standard Specification for Poly (Vinyl Chloride) (PVC) Sewer Pipe and Fittings” .

2.03 PIPE JOINT CONSTRUCTION

A. PVC Sewer Pipe and Fittings: With solvent-cemented joints according to ASTM F402 “Standard Practice for Safe Handling of Solvent Cements, Primers, and Cleaners Used for Joining Thermoplastic Pipe and Fittings “ and ASTM D2321 “Standard Practice for Underground Installation of Thermoplastic Pipe for Sewers and Other Gravity-Flow Applications”.

B. Join dissimilar pipe materials according to ASTM D5926 “Standard Specification for Poly (Vinyl Chloride) (PVC) Gaskets for Drain, Waste, and Vent (DWV), Sewer, Sanitary, and Storm Plumbing Systems”, with couplings and gaskets compatible with pipe materials being joined.

2.04 CLEANOUT INSTALLATION

Install cleanouts according to the following:
Inlet and Outlet of interceptors: Cast-iron cleanouts.

- Comply with requirements for cleanouts specified in Section 221313 "Facility Sanitary Sewers."

- Cast-Iron Cleanouts: Install with PVC riser from sewer and distribution piping to cast-iron cleanout housing at grade. Use NPS 4 (DN 100) PVC sewer pipe and fittings with

solvent-cemented joints for risers. Attach riser to cleanout housing with rubber gasket or coupling.

- PVC Cleanouts: Install with PVC riser from sewer and distribution piping to PVC cleanout at grade. Use NPS 4 (DN 100) PVC sewer pipe and fittings with solvent-cemented joints for risers and cleanout fitting.

- Cleanout Support: Set cleanouts in concrete blocks in concrete pavement. Formwork, reinforcement, and concrete are specified in Section 033000 "Cast-in-Place Concrete."

- Set top of cleanout with grade since it installed at concrete pavement.

- Install filter mat over filter material before backfilling.

2.05 CIDENTIFICATION

Identification materials and their installation are specified in Section 908 "Earthwork" Arrange for installation of green, detectable warning tape directly over piping, at outside edges of underground structures, and at outside edges of absorption systems.

2.06 FIELD QUALITY CONTROL

A. System Tests: Perform testing of completed clarifier system piping and structures according to authorities having jurisdiction.

B. Additional Tests: Fill underground structures with water and let stand overnight. If water level recedes, locate and repair leaks and retest. Repeat tests and repairs until no leaks exist.

2.07 CLEANING

A. Clear interior of piping and structures of dirt and other superfluous material as work progresses.

B. Maintain swab or drag in piping, andpiping and pull past each joint as it is completed. Place plugs in ends of uncompleted pipe at end of workday or when work stops.

END OF SECTION 221353

SECTION 22 33 13 – ELECTRIC COMMERCIAL WATER HEATERS

PART 1 - GENERAL

1.1 SECTION INCLUDES

A. Electric, large commercial water heater tank and water heater accessories.

1.2 RELATED SECTIONS

A. Division 26 Sections for electrical power and control wiring.

1.3 REFERENCES

A. General: Applicable edition of references cited in this Section is current edition published on date of issue of Project specifications, unless otherwise required by building code in force.

B. American National Standards Institute (ANSI): www.ansi.org:

1. ANSI Z21.22 - Relief Valves for Hot Water Supply Systems

C. American Society of Heating, Refrigerating, and Air-Conditioning Engineers (ASHRAE): www.ashrae.org:

1. ASHRAE/IESNA 90.1 - Energy Standard For Buildings Except Low-Rise Residential Buildings

D. American Society of Mechanical Engineers (ASME): www.asme.org

1. ASME Boiler and Pressure Vessel Code, Section IV for "HLW" stamp and registered with National Board of Boilers and Pressure Vessel Inspectors for "NB" stamp

E. American Society of Sanitary Engineering (ASSE): www.asse-plumbing.org

1. ASSE 1003 - Performance Requirements for Water Pressure Reducing Valves for Domestic Water Distribution Systems
2. ASSE 1010 - Performance Requirements for Water Hammer Arresters

F. National Electrical Manufacturers Association (NEMA): www.nema.org:

1. NEMA Standards Publication 250 - "Enclosures for Electrical Equipment (1000 Volts Maximum)"

G. National Fire Protection Association (NFPA) www.nfpa.org:

1. NFPA 70 - National Electrical Code

2. NFPA 496 - Standard For Purged and Pressurized Enclosures for Electrical Equipment

H. NSF International (NSF): www.nsf.org:

1. NSF 61 - Drinking Water System Components – Health Effects
2. NSF 372 - Drinking Water System Components - Lead Content

I. Product Data: For each product:

1. Manufacturer's data sheets indicating unit performance and compliance with requirements.
2. Include details of electrical and mechanical operating parts.
3. Show mounting and securing requirements and utility connection requirements.

J. LEED Submittals

1. Product Data for Prerequisite EA 2 Minimum Energy Performance: Documentation indicating that units comply with applicable requirements in ASHRAE/IESNA 90.1, Section 7, "Service Water Heating."

1.4 INFORMATION SUBMITTALS

A. Cut Sheet and warranty

1.5 CLOSEOUT SUBMITTALS

A. Operation and maintenance data.

1.6 QUALITY ASSURANCE

A. Source Limitations: Obtain electric storage tank water heaters through a single source from a single manufacturer.

B. Electrical Components: Listed and labeled per NFPA 70, Article 100, by a testing agency acceptable to authority having jurisdiction.

C. Boiler and Pressure Vessel Safety Requirements: Comply with ASME "Boiler and Pressure Vessel Code," Section IV for "HLW" stamp.

D. Sanitation Standard: Comply with NSF 61 for fixture components in contact with potable water.

E. Lead-Free Construction: Comply with NSF 372 for fixture components in contact with potable water.

1.7 WARRANTY

A. Standard Warranty: Manufacturer's standard form in which manufacturer agrees to repair or replace components of electric, domestic-water heaters that fail in materials or workmanship within specified warranty period.

1. Standard Warranty Period: From Date of Substantial Completion:
   a. Tank-3 years
   b. parts-1 year

PART 2 - PRODUCTS

2.1 MANUFACTURERS

A. Basis-of-Design Product: Subject to compliance with requirements, provide electric commercial storage tank water heaters by A.O. Smith Corporation, 500 Tennessee Waltz Parkway, Ashland City, TN 37015 ; Web site www.hotwater.com

1. Submit requests for substitution in accordance with Instructions to Bidders and Division 01 General Requirements.

2.2 ELECTRIC, WATER HEATERS

A. Model CAHP 120, 119 gallon electric pump water heater, UL 1453, sized for constant temperature duty to meet flow requirements and temperature setpoints up to 110 deg. F - compliant fixtures, with liquid-cooled solid-state relays, flow activation, external emergency stop button, and anti-scald protection.

1. Basis of Design Manufacturer/Model: **AO Smith Commercial Heat Pump Water Heater**

2. Heat Exchanger: Copper tubing with brazed brass fittings and other NSF 61 barrier materials for potable water, without storage capacity [ASME- and National Board- certified].

3. High Temperature Package: Temperature greater than 180 deg. F

4. Connections: 3/4" inch NPT (DN 25) inlet, outlet.
5. Pressure Rating: 160 psi
6. R-134a Refrigerant
7. Temperature Control: Microprocessor based PID logic and dual display of set-point and actual outlet water temperature.
8. Safety Controls:
   a. Internal thermostat with auto reset high- limit switch.

   b. Surface mounted bi-metal thermostat with manual reset.

   c. Door cutoff switch and emergency stop button.

d. Temperature Rise at Flow Rate: 30 F at 166 GPH

9. Electrical Characteristics: 12.0 kW at 208 V, 240 Vand 277 V available single phase and 3 phases.

10. Facility Controls Integration: 48 amp power supply

2.3 WATER HEATER ACCESSORIES

A. Provide electric storage water tank including the following system accessories:

1. Pressure and Temperature Relief Valves: Pressure and Temperature Relief Valves: [Brass] ASME rated and stamped pressure relief valve. Adjust to pressure setting less than water heater working-pressure rating.

a. Pressure and Temperature Safety Relief Valve set to 80 psig (552 kPa).

2. Pressure-Reducing Valves: ASSE 1003.
3. Vacuum Relief Valves: ANSI Z21.22/CSA 4.4.
4. Shock Absorbers: ASSE 1010 or PDI-WH 201, Size A water hammer arrester.
5. Thread Adapters: NPT to BSPP, stainless steel.
6. Y-Strainer: Lead Free Brass OR Stainless steel.

2.4 SOURCE QUALITY CONTROL

A. Factory Tests: Test and inspect commercial-water heaters according to ASME "Boiler and Pressure Vessel Code," Section [VIII] [IV]. Submit test reports.

PART 3 - EXECUTION

3.1 INSTALLATION

A. Electric Commercial-Water Heater Mounting:

1. Install water heaters in accordance with manufacturer's written instructions.
2. Provide a level working space not less than 30" in length and 30" in width in front of the control side of the appliance
3. Install appliance and plumbing to allow for inspection, maintenance, and replacement of the appliance and its components, without disturbing other installed equipment, controls, piping, and components, other than what requires repair/replacement
4. Ensure that anode rod is accessible for replacement

B. Install water supply piping to each water heater, and from heater to fixture requiring hot water supply connection.

1. Install pressure relief valves on water supply and outlet piping. Provide relief valve on each supply in readily-serviced location. Lock stop valve in OPEN position.

2. Comply with Division 22 Section, General-Duty Valves for Plumbing Piping, for stop valve requirements.
3. Pipe the valve to within 6" of the floor or drain pan or to the outdoors and must terminate in an observable location

C. Install relief valve drain piping as indirect waste to spill by positive air gap into open drains or over floor drains. Install hose-end drain valves at low points in water piping.

D. Run relief valve drain piping to set pressure not exceed the marked hydrostatic working pressure of the water heater (150 psi) and a discharge capacity not less than the input rate.

E. Install a separate water cut-off valve for both the hot and cold water lines as needed.

F. If appliance is installed in or above conditioned space or in a location where water damage could occur, install a drain pan according to the requirements

3.2 FIELD QUALITY CONTROL

A. Do not energize water heater until hydrostatic testing of domestic water lines is complete. See Division 22 Section "Plumbing."

B. Test and adjust installation.

1. Set field-adjustable temperature set point of temperature-actuated controls. Adjust set point within allowable temperature range.
2. Replace defective or malfunctioning controls and equipment.

C. Clean unit surfaces, test fixtures, and leave in ready-to-use condition.

END OF SECTION

SECTION 23 00 00

HEATING, VENTILATION, AND AIR CONDITIONING

PART 1 - GENERAL

1.1 DESCRIPTION:

A. Related Documents:

1. Drawings and general provisions of the Contract, including General and Supplementary Conditions and Division 01 Specification Sections, apply to this Section.
2. Section 019113 General Commissioning Requirements.
3. Where the requirements of the Section exceed those in other Contract Documents, Contractor shall comply with the requirements of this Section.

B. Codes and Regulations:

1. In addition to complying with the specified requirements, comply with pertinent regulations of the Authority Having Jurisdiction. All work must comply with the version of the code that was in effect at the time of the initial permit application date.
   a. CALGreen – California Green Building Standards Code
   b. CBC – California Building Code
   c. CEBC – California Existing Building Code
   d. CEC – California Electrical Code
   e. CEnC – California Energy Code
   f. CFC – California Fire Code
   g. CMC – California Mechanical Code
   h. CPC – California Plumbing Code
   i. CRC – California Residential Code
   j. DPH – Department of Public Health
   k. DWR – Department of Water Resources
   l. DSA – Division of the State Architect
   m. HCD – Housing and Community Development
   n. NFPA – National Fire Protection Association
   o. OSHPD – Office of Statewide Health Planning and Development
   p. SFM – Office of the State Fire Marshal

q. Reach Codes that have been adopted by the Authority Having Jurisdiction

r. Local Building Department

s. Local Fire Marshall

2. In the event of conflict between or among specified requirements and pertinent regulations, the more stringent requirements will govern when so directed by the Architect.

C. Included: Work includes, but is not limited to, the following.

1. The Work covered by this Specification shall include furnishing labor, material, equipment, and services to construct, install and place in operation, the complete Heating, Ventilating and Air Conditioning Systems to the extent as indicated, and as shown on the Drawings and specified herein. The Work covered under this Section shall hereinafter be referred to as the Mechanical System.

a. Fan Coil Units

b. Condensing Units

c. Heat Pump Units

d. Centrifugal Exhaust Fans and Roof Exhausters

e. Duct systems complete with supports, dampers, grilles, registers, diffusers and louvers.

1. Exhaust Air

2. Product Conveying Systems

f. Filters and Filter Boxes

g. Duct, Pipe and Equipment Insulation

h. Low Voltage Controls

i. Refrigerant Piping

j. Vibration Isolators

2. A system of temperature controls shall be furnished and installed complete as hereinafter described. Low voltage wiring and conduit, complete with electrical accessories and materials as required for the installation of the temperature control system shall be furnished and installed under this Section of the Contract but shall conform to the Specification requirements as set forth under Division 26.

D. Work Not Included In This Section:

1. Blocking, framing and wood supports required for the purpose of accommodating the Mechanical System unless specifically called for under this Division. The contractor is responsible for the correct

location of such items and shall bear the expenses covering their omission or improper location.

2. Electrical connections to motors, electric starters, disconnect and over-current protective devices, unless specifically called for by this Section, or unless the equipment is furnished as an integral part of the Mechanical System Equipment, as hereinafter specified, or noted on the Drawings.

3. Line voltage electrical wiring and conduit, except where specifically called for on the Drawings or hereinafter in this Section.

4. Painting, except when supplied as factory finish, or specifically called for in this Section or on Drawings.

1.2 QUALITY ASSURANCE

A. Use adequate numbers of skilled workers who are thoroughly trained and experienced in the necessary crafts and who are completely familiar with the specified requirements and the methods needed for proper performance of the Work of this Section.

B. Without additional cost to the Owner, provide such other labor and materials as are required to complete the Work of this Section in accordance with the requirements of governmental agencies having jurisdiction, regardless of whether such materials and associated labor are called for elsewhere in these Contract Documents.

1.3 SUBMITTALS

A. Comply with pertinent provisions of Architectural Section.

B. Product data: Within 35 calendar days after the Contractor has received the Notice to Proceed, submit the following to the Architect for approval prior to acquisition:

1. Materials list of items proposed to be provided under this Section.

2. Manufacturer's specifications, cut sheets, and other data needed to prove compliance with the specified requirements. All pieces of equipment shall be clearly identified on corresponding manufacturer's literature being submitted. All information for each item shall be correlated.

3. Shop Drawings or other data as required to indicate method of installing and attaching equipment, ductwork and piping except where such details are fully shown on the Drawings.

4. Submittals for the entire Project shall be submitted at the same time. Incomplete or noncompliant submittals may be rejected.

5. Submittals shall be provided in pdf format.

1.4 DESIGN CHANGES CAUSED BY PRODUCT SUBSTITUTIONS

A. If the heating and/or air conditioning equipment is substituted with a different brand or model than that specified on the Drawings the Authority Having Jurisdiction may require the energy compliance calculations to be updated. The contractor shall be responsible for all cost related to updating the calculations. If the substituted equipment does not comply the contractor shall be responsible for providing equipment that meets or exceeds the performance of the specified equipment at no additional cost to the Owner.

B. Contractor shall pay costs of design and installation for changes resulting from substitution of alternate products.

C. Acceptance of alternate products by Architect does not change this requirement.

1.5 PRODUCT HANDLING

A. Comply with pertinent provisions of Architectural Sections.

PART 2 - PRODUCTS

2.1 HEATING, VENTILATING AND AIR CONDITIONING EQUIPMENT

A. Heating, Ventilating, and Air Conditioning Equipment: Equipment shall be as specified on the Drawings. All other equipment shall be pre-approved by the Mechanical Engineer.

B. It shall be the responsibility of the Contractor to see that any substituted equipment performs similarly to that which is specified and fits in the same area as specified. Cost of any additional Work caused by the substitution of equipment shall be borne by the Contractor.

2.2 AIR DISTRIBUTION EQUIPMENT

A. Grilles, registers and ceiling diffusers and other accessory equipment shown on the Drawings and "Grille, Register and Diffuser Schedule" shall be manufactured by Titus unless shown otherwise.

B. Any substitutions of the above equipment which may be proposed by the Contractor shall be re-sized to suit his equipment by the proposed manufacturer and submitted in tabular form listing components proposed for each location in the System, identifying each as to location, design, air quantity passing through the devices, pressure drop, noise criteria data, velocities of air leaving the device and "K" flow factors for each item. Manufacturer's data sheets showing dimensions and recommended method of installation for each component must also be included.

2.3 CONTROL DAMPERS

A. In refrigerated areas damper shall be Greenheck Model ICD-44, class 1 @ 4”wg as scheduled on plans. Damper frame shall be aluminum formed into a 5” X 1” structural hat channel. Blades shall be heavy gauge extruded aluminum airfoil shape with metal to blade overlap. Blade seals shall be

Silicone with 304SS jamb seal. The linkage shall be concealed in the frame out of the air stream, plated steel material. The Axle shall be stainless steel. Finish shall be Hi-Pro polyester powder coated.

B. In all other locations provide Greenheck model VCD-23, class 1 @ 4”wg as scheduled on plans. Damper frame shall be stainless steel, formed into a 5” X 1” structural hat channel. Blades shall be 16 gauge stainless steel strengthened by three longitudinal 1” deep Vee grooves running the entire length of each blade. Blade seals shall be Silicone. Jamb to be flexible stainless steel compression type. The linkage shall be concealed in the frame out of the air stream, stainless steel material. The Axle shall be stainless steel. Bearings to be stainless steel. Finish shall be Hi-Pro polyester power coated.

2.4 LOUVERS

A. 4" deep louvers, Greenheck, Model ESJ-401, or approved equal. Deflection blades shall be spaced on 4" centers having 1/2" high vertical baffle and an additional lateral center rain hood. The edges of louver blades shall be folded or beaded to exclude driving rain. Louvers blades shall be oriented to minimize the entrainment of rainwater. Louver blades, heads, sills, jambs, braces and mullions shall be made of aluminum. Louvers shall be provided with flanges.

B. Provide 1/2" aluminum bird screen on outside air intake louvers and 1/4" aluminum insect screen on combustion air louvers.

2.5 RECTANGULAR SHEET METAL DUCTWORK

A. Rectangular supply, return, outside air and exhaust ducts, single leaf dampers and plenums shall be fabricated from prime grade galvanized steel sheets of lock form quality and shall be constructed in accordance with appropriate tables of the latest ASHRAE "Guide and Data Book" and SMACNA "HVAC Duct Construction Standards" handbook and Chapter 6 of the 2022 CMC.

B. Transverse Duct Joints shall be made with The Ductmate System. When using The Ductmate System, construction of the duct such as gage, reinforcing, etc. shall be as indicated in the latest addition of the applicable SMACNA standards. With proper data, an equal may be submitted, providing the corners have a downset and corner clips to insure airtight integrity. Testing must be done by a nationally recognized testing laboratory. The standard Ductmate 35 System joint is the equivalent of a SMACNA "J" connection. The Ductmate 25 System joint is the equivalent of a SMACNA "F" connection. The installation of the Ductmate System shall be in accordance with the latest manufacturer’s printed Assembly and Installation Instructions.

C. Each duct or plenum shall be diagonally cross-broken for rigidity.

D. Duct bends, fittings, transitions, etc. shall be fabricated in accordance with Fabrication Standards as shown on the Drawings or in accordance with latest SMACNA "HVAC Duct Construction Standards" where not shown on Drawings.

E. Support ducts to joists or similar structural members. Except where indicated otherwise, ducts with a side of 24" or more shall be supported on Ductmate trapeze duct hangers consisting of 2" high x 1-1/2" wide x 18" gauge channel and 3/8" diameter hanger rods hung from support brackets bolted to structural members. See also Special Fabrications as shown on the Drawings. Duct supports shall be eight (8) feet maximum on center.

F. At branch ducts, provide manually operated dampers of the type and arrangement shown on the Drawings, two gages heavier than the duct (if single leaf type) in which installed, and equipped with locking quadrants and closed end bearings.

G. Sizes shown on Drawings are net inside dimensions. Enlarge duct to accommodate lining.

2.6 ROUND DUCTWORK AND FITTINGS

A. 2-10" w.g. round duct through 61" in diameter shall be United Sheet Metal spiral lockseam unseal duct, or approved equal, manufactured from galvanized steel meeting the ASTM A-527-71 in the following gages:

Diameter	Metal Thickness
3-13”	26 ga.
14-23”	24 ga.

B. Round duct shall be new and exclusively obtained for this project. Each piece shall be in 20’ lengths. Ducts shall be cut to length required with joints only at fitting locations, except on duct runs longer than 20 feet.

C. Spiral duct and fitting connections, 15" diameter and larger shall be Ductmate Spiralmate round duct connectors. The connector system shall consist of two mating round duct connector flanges roll-formed from hot dipped galvanized steel with an integral sealant and closure ring roll-formed from hot dipped galvanized steel.

D. Fittings shall be United Sheet Metal galvanized fittings in the following gauges:

Diameter	Metal Thickness
3-13”	24 ga.
14-23”	22 ga.

E. Spiral duct fittings must be manufactured as separated fittings and shall not be saddle taps, stubs or tap-in fittings tapped into spiral duct, nor may they be dove-tailed tap-ins into pipe or fittings.

F. Reducers shall occur after a branch tap occurs on the main portion of the fitting. Divided-flow fittings shall be used unless shown otherwise on the Drawings.

G. Joints on ducts and fittings shall be covered and sealed with 4" wide, 6 oz. canvas saturated with Arabol lagging adhesive, or Hardcast DT tape in conjunction with Hardcast FTA-20, non flammable, non-toxic adhesive, or GlenKote duct sealer or other approved mastic type sealer. Duct tape will not be allowed. Where exposed to weather, paint lagging strips with two coats of silver enamel paint.

H. All ductwork shall be constructed and supported in accordance with appropriate tables of the latest SMACNA “HVAC Duct Construction Standards” handbook and Chapter 6 of the 2022 CMC. Duct gauges to be in accordance with this section.

I. At branch ducts, provide manually operated dampers of the type and arrangement shown on the Drawings, two gages heavier than the duct (if single leaf type) in which installed and equipped with locking quadrants and closed end bearings.

2.7 FLEXIBLE DUCT

A. Flexible air duct shall be Hart & Cooley Model F218. Duct shall consist of an inner core having two layers of polyester film encapsulating a steel wire helix surrounded by a blanket of fiberglass insulation and sheathed in a metalized polyester vapor barrier reinforced with fiberglass scrim. All air ducts shall be UL listed under the UL-181 standard as a Class 1 Air Duct also conforming to NFPA standards 90A and 90B. This air duct shall have a certified thermal resistance rating of R-8 in accordance with ASTM C518 at 75^0F and carry the ADC “Thermal Performance” seal.

B. Use only the minimum length required to make the connection. In no case shall any section of flexible duct exceed 5 feet in length.

C. Use two layers of UL listed 181 duct tape to connect flexible duct to the metal duct if flexible duct does not have S.M. collars.

D. The number of bends shall not exceed a combined total of 90 degrees. 90 degree bends will not be allowed at diffuser connections.

2.8 DUCT SPECIALTIES

A. Damper Regulators and Bearings: Duro-Dyne "Specline" SR-Series or approved equal, lever type with matching end bearing. Regulator set shall include rubber gasket between regulator and duct, spring washer between core and housing, wedge pin, dial indicator and handle. Matching end bearing shall be closed end with rubber gasket:

Model	Size
148	10” and Under
388	20” and Under

128	21” and Above

B. Access Panels: Access panels shall be located at all points where adjustable mechanisms are installed internal to or on the surfaces of the ductwork. Where adjustable mechanisms are concealed by walls or ceilings, "Elmdor" or approved equal access doors shall be installed. Size shall be suitable for convenient servicing. Tile Walls: Doors and Frame: Stainless Steel. Other areas: recess type to receive ceiling or wall finish in order to provide "Blind Finish".

C. Fire Dampers: Fire dampers shall be installed where shown on the Drawings and/or required, and shall be of a type approved by the U.L. Laboratories, Inc. and the State of California Fire Marshal. Dampers shall be installed per manufacturer's instructions. Provide access door in duct at each fire damper such that damper is easily accessible.

D. Volume Dampers:

1. In rectangular ducts greater than 1.5 sq. ft., provide Pottorff Model CD42, or equal, factory fabricated opposed blade damper, 16 gauge blades, and brass bearings. Blade width shall not exceed six inches.

2. In rectangular ducts 1.5 sq. ft. and less, provide single leaf dampers as described in Section 23 00 00, 2.3 (a. and g.).

3. In round ducts 15" in diameter and less, provide shop fabricated galvanized sheet metal plate dampers. Plate shall be 18 gauge or shall be two even gauges heavier than duct; minimum thickness 22 gauge. Provide stiffening beads at 1/3 points in dampers lighter than 18 gauge.

4. In round ducts 16" and greater, provide Pottorff opposed blade damper Model CD22R or approved equal.

5. In round ducts 4” – 24” in diameter, above “hard” ceilings, provide DuroZone Cable Operated Damper. Cable length to be between 3 and 15 FT long. Contractor to determine proper length to be use. Cable shall be routed inside the duct to the face of the grille or diffuser. Tuck cable up behind diffuser after balancing.

E. Provide 20 gauge galvanized sheet metal escutcheon plates at duct penetrations of finished building surfaces. Install tight against surface and securely attached to duct. Continue insulation through openings.

F. Duct Mounted Access Doors:

1. In rectangular duct provide, DuroDyne Model IAD, Ductmate "Sandwich", or equal, insulated, duct mounted access doors with Cam-Lock operated latches where shown on drawings or required for access to duct mounted equipment. Doorframe shall be 24-

gauge with double wall door and 1/2" glass fiber insulation. Size doors to provide easy access to equipment.

2. In round ducts, provide Ductmate - METU round duct access doors, fully insulated, with attached gasket and springs between inner and outer door. Access doors shall be as large as practical as duct size will allow.

2.9 FLEXIBLE CONNECTIONS

A. Provide fireproof, insulated, non-porous, flexible connections between fans and ducts or casings and where ducts are of dissimilar metals. For round ducts, securely fasten flexible connections by zinc coated steel clinch-type drawbands. Flexible connections shall be DuroDyne "Insulfab" or "Insulflex" or approved equal.

B. Provide a duct support next to each flex connector to prevent any strain on connection.

2.10 PIPE HANGERS AND SUPPORTS

A. In general, pipe hangers and supports shall conform to the following except where special pipe hangers and supports are detailed on the Drawings. In cases hanger and support details on the Drawings shall take precedent over the following:

Pipe 6” Size and Smaller	
Items	Superstrut Number
Pipe Hanger	710
Side Beam Clamp for Wood Joist	540
Beam Coupling for Steel Beams	U563-U562
Rod Coupling for Connection to “Hilti”	H-119
Inserts in Concrete Decks	
Trapeze Hangers	A1200-A1202
Pipe Clamp	A716 or 701W/S-716

B. Similar items by Unistrut, Securstrut, Michigan, or B-Line will be acceptable.

C. Hanger Rods shall conform to the following table:

Tube/Pipe Size	**Rod Diameter**
½ to 4”	⅜”

D. Hanger Support Spacing shall be as follows unless shown otherwise on the Drawings:

1. Horizontal:

a. Copper: Every 6 feet for 1-1/2 inch and smaller, and 10 feet for 2 inch and larger.

b. Steel, Gas: Every 6 feet for 1/2 inch, 8 feet for 3/4 inch and 1 inch, and 10 feet for 1-1/4 inch and larger.

2. Vertical:

a. Copper: Every floor not to exceed 10 feet.

b. Steel, Gas: Same as horizontal spacing except 1-1/4" and larger at every floor.

2.11 DAMPER ACTUATOR

A. Actuators shall be Belimo. Substitutions will not be acceptable. Actuator shall be direct coupled over the shaft, spring return type, unless specified otherwise

2.12 ELECTRICAL EQUIPMENT

A. Motor starters shall be provided complete with properly sized thermal overload protection and other appurtenances necessary for motor control specified. Mount starter adjacent to equipment. See electrical drawing. Maintain minimum of 3' clearance to front of device.

B. Motor Starters: Shall be NEMA I or III as appropriate, general purpose, weather-resistant, with watertight enclosure where required.

2.13 INSULATION

A. General: Insulation and lining material shall meet requirements of flame spread not to exceed 25 and smoke developed not to exceed 50 as tested by Procedure ASTM-E-84, NFPA 255 or U.L. 723 and shall conform to NFPA 90A and 90B.

B. Heating and cooling duct and related heating and cooling equipment insulation shall conform to 2015 Building Energy Efficiency Standards, Administrative Regulations, Title 24, Part I, Section 124, except to the extent that this Specification supersedes the minimum standards as established by the Code, in which case this Specification shall take precedent.

C. Unless noted otherwise, insulation shall be Fiberglass, or approved equal material. Application Work shall be performed in accordance with the best accepted practice of the trade and the manufacturer's recommendations. The performance of insulation Work shall be by experienced insulation applicators. Insulation shall be installed after the specified tests have been applied to the piping and duct systems, and the systems have been inspected and approved. Fiberglass trade names and/or numbers have been used to establish a standard of quality.

D. External Duct Insulation – Outdoors, in a space between the roof and an insulated ceiling, in a space directly under a roof with fixed vents or openings to the outside or unconditioned spaces, in an unconditioned crawlspace; or other unconditional spaces: Shall be applied to concealed

heating and cooling, supply and return duct except duct that is internally lined. Insulation on duct shall be Manville Microlite FSK duct insulation, 3" thick, minimum installed R value of 8.0 or greater, FSK aluminum foil reinforced with fiberglass, scrim laminated to U.L. rated Kraft, or approved equal. Adhere to duct surfaces with Foster's 85-62 or approved equal, adhesive applied in strips of 6" wide on approximately 12" centers. Circumferential seams shall be butted together and sealed over joints with 3" wide pressure sensitive foil vapor barrier tape. Longitudinal edges shall be lapped 2" and secured with outward clinching staple 6" on center then sealed with pressure sensitive foil vapor barrier tape. Duct wrap shall be installed to allow maximum fullness at corners (avoid excessive compression) minimum thickness at corners shall be 1". Where ducts are over 24" in width, the duct wrap shall be additionally secured to the bottom of the rectangular ducts with mechanical fasteners spaced on 18" centers (Max.) to prevent sagging insulation.

E. External Duct Insulation – All other locations not listed above: Shall be applied to concealed heating and cooling, supply and return duct except duct that is internally lined. Insulation on duct shall be Manville Microlite FSK duct insulation, 2" thick, type 100, minimum installed R value of 6.0 or greater, FSK aluminum foil reinforced with fiberglass, scrim laminated to U.L. rated Kraft, or approved equal. Adhere to duct surfaces with Foster's 85-62 or approved equal, adhesive applied in strips of 6" wide on approximately 12" centers. Circumferential seams shall be butted together and sealed over joints with 3" wide pressure sensitive foil vapor barrier tape. Longitudinal edges shall be lapped 2" and secured with outward clinching staple 6" on center then sealed with pressure sensitive foil vapor barrier tape. Duct wrap shall be installed to allow maximum fullness at corners (avoid excessive compression) minimum thickness at corners shall be 1". Where ducts are over 24" in width, the duct wrap shall be additionally secured to the bottom of the rectangular ducts with mechanical fasteners spaced on 18" centers (Max.) to prevent sagging insulation

F. Internal Duct Insulation - Outdoors, in a space between the roof and an insulated ceiling, in a space directly under a roof with fixed vents or openings to the outside or unconditioned spaces, in an unconditioned crawlspace; or other unconditional spaces: Shall be applied to all heating and cooling supply and return duct and plenums on roof or where shown on Drawings. Manufacturer shall be Manville Microlite, or approved equal. Duct Liner shall be Linacoustic R, 2" thick, 1.5 pcf, with a "K" value of 2.2 in. for a total "R" installed value of 8 or greater. Insulation shall withstand velocities of up to 5000 FPM and temperatures up to 250 degrees F.

G. Internal Duct Insulation – All other spaces not listed above: Shall be applied to all heating and cooling supply and return duct and plenums where shown on Drawings. Manufacturer shall be Manville Microlite, or

approved equal. Duct Liner shall be Linacoustic R, 1 ½" thick, 1.5 pcf, with a "K" value of 2.2 in. for a total "R" installed value of 6 or greater. Insulation shall withstand velocities of up to 5000 FPM and temperatures up to 250 degrees F

H. Portions of duct receiving Duct Liner shall be completed with transverse joints neatly butted with no gaps or interruptions. The duct liner shall be adhered to the sheet metal with 100% coverage of adhesive and exposed leading edges and transverse joints coated with adhesive. Adhesive shall be a water based product. In addition, this shall be secured with mechanical fasteners which shall compress the liner sufficiently in place. The liner shall be cut to assure overlapped and compressed longitudinal corner joints. Application procedures shall comply with the recommendations of the Sheet Metal and Air Conditioning Contractor's National Association's Duct Liner Application Standard, Second Edition.

I. External Duct Insulation Exposed to Weather: Shall be applied to heating and cooling supply and return ducts and plenums exposed to weather if not noted to be internally insulated. Insulation shall be Knauf Type ASJ, or approved equal, rigid board fiberglass, 3.0 # per cubic foot minimum density, 2" min. thickness, 8.0 min. R value. The board shall be neatly cut and fitted to the surface with joints tightly butted together and against standing seams. The insulation shall be secured to the duct with adhesive and mechanical fasteners starting 3" from butt joints and 18" on center each direction. Vapor-barrier tape shall be then applied over joints, seams, breaks and any penetrations of the insulation vapor barrier jacket. A weather-barrier mastic compound reinforced with fabric or mesh shall be applied as a finish coat. Finish by painting with two (2) coats of aluminum paint.

J. Ducts: Ducts shall be constructed, installed, sealed and insulated in accordance with the 2022 CMC. The above paragraph(s) shall supersede if more stringent.

2.14 <u>TEMPERATURE CONTROLS</u>

A. Temperature controls shall be furnished as indicated in schematic Drawing on Plans including room thermostats, relays and other necessary combustion, operating and safety controls.

B. Wiring and Conduit

1. Control wiring and conduit shall be the responsibility of this section and be installed as follows:

a. In equipment rooms/attics – Conductors shall be run in conduit. Final connection to equipment shall be flexible conduit.

b. Concealed in building construction (wall/inaccessible ceilings) - Conductors shall be run in conduit.

c. Roof mounted/exterior equipment yards – Conductors shall be in conduit. All flexible conduit shall be seal-tite with weatherproof connections. Equipment on grade and detached from the building a distance greater than 36” shall have underground control conduit routed to equipment.

d. Above accessible ceiling spaces – Control cable will be allowed to be installed without conduit in accessible areas above ceilings as follows:

1. Cable is an approved type for the application.

2. Cable is bundled/organized in management devices routed square with building lines (no diagonals) and kept clear of electrical devices (i.e., ballasts, transformers, etc.) that could cause interference.

3. Conduit sleeves are provided between accessible ceiling spaces (i.e., across soffits, gypboard ceilings, etc.) as required to maintain future access to cable.

e. Cable routed in accessible ceiling spaces shall comply with EIA/TIA standards for communications cabling. Communication bus wire shall be W183C-2058Y Connect Air, yellow shielded cable.

C. Electric wiring, conduit and other electric devices required to complete the installation of the temperature control systems shall comply with requirements as set forth in the Electrical Section of this Specification.

D. After completion of the installation, the Contractor shall adjust thermostats, motors and other equipment provided under this Contract. He shall place them in complete operating condition subject to approval of the Architect.

E. The Control System herein specified shall be free from defects in workmanship and material under normal use and service. If, within twelve (12) months from date of acceptance by the Architect, any of the equipment herein described is proved to be defective in workmanship or material, it will be adjusted, repaired or replaced free of charge by the Contractor.

F. The final connections and supervision of control wiring and interlock wiring shall be the responsibility of this Contractor.

G. The Contractor shall submit to the Architect for approval, the required number of shop drawings of the entire control system before starting Work.

H. Upon completion of the Work, the Contractor will provide diagrammatic layouts of the Automatic Control Systems specified herein. Layouts shall show control equipment and the function of each item shall be indicated.

I. The temperature control system shall be installed by persons in the direct employment of the temperature controls manufacturer(s) exclusive contracting representative. The Mechanical Contractor shall not install the temperature controls unless pre-approved by the Mechanical Engineer.

2.15 REFRIGERANT PIPING

A. Refrigerant piping shall be flushed clean with nitrogen and the ends capped prior to installation. Refrigerant piping shall be Type L copper with wrought copper fittings. Use 45% minimum silver brazing alloy with melting point higher than 1100 F. for making the joints.

B. Insulate refrigerant suction line with 1" thick Owens-Corning Fiberglass or Armstrong Armaflex foamed plastic flexible tubing insulation applied with No. 500 adhesive. Use multiple layers and miter insulation to cover joints and all other items as required to prevent condensation.

C. VRV OR VRF and Heat pump systems: Insulate all refrigerant lines with 1" thick Owens-Corning Fiberglass or Armstrong Armaflex foamed plastic flexible tubing insulation applied with No. 500 adhesive. Use multiple layers and miter insulation to cover joints and all other items as required to prevent condensation.

D. When piping & insulation are installed outside of building, insulation shall be aluminum jacketed. Jacketing shall be minimum 0.016” thick, 3105 or 3003 alloy aluminum with moisture barrier & stucco embossed finish. Provide aluminum elbow covers at all pipe bends equivalent in construction to jacketing.

2.16 REFRIGERANT PIPING ACCESSORIES

A. Stop valves shall be Henry Type 622, 500 psi pressure rating brass, soldered, packless diaphragm, globe shut-off pattern.

B. Solenoid valves shall be Sporlan Type MA14, 450 psi rating, brass body.

C. Filter dryer shall be Sporlan "Catch-All" with soldered connections.

PART 3 - EXECUTION

3.1 SURFACE CONDITIONS

A. Examine the areas and conditions under which Work of this Section will be performed. Correct conditions detrimental to timely and proper completion of the Work. Do not proceed until unsatisfactory conditions are corrected.

3.2 COORDINATION

A. Coordinate as required with other trades to assure proper and adequate provision in the Work of those trades for interface with the Work of this Section.

3.3 PREPARATION

A. Holes in concrete:

1. Provide sleeves, accurately dimensioned and shaped to permit passage of items of this Section.

2. Deliver such sleeves, with accurate setting drawings and setting information, to the trades providing the surfaces through which such items must penetrate, and in a timely manner to assure inclusion in the Work.

B. Flashing:

1. Where items of this Section penetrate the roof, outer walls, or waterproofing of any kind, provide under this Section base flashing and counterflashing required at such penetration.

2. Provide on each pipe passing through the roof a 4 pound seamless lead flashing and counterflashing assembly.

3.4 GENERAL INSTALLATION REQUIREMENTS

A. Conceal piping, ductwork, and equipment in spaces provided unless specifically shown otherwise. If spaces are inadequate, notify Architect in time to avoid unnecessary Work. Do not cut or notch structural members without specific approval of the Architect.

B. Follow manufacturer's instructions on items not specifically covered in drawings and specifications. Report discrepancies to Architect for clarification before starting Work.

3.5 EQUIPMENT INTERFACE

A. Provide required shut off valves, unions, and final connections of piping to the Work of this Section.

B. For electrically operated equipment, verify the electrical characteristics actually available for the Work of this Section and provide equipment meeting those characteristics.

3.6 PAINTING

A. Paint inside of air outlets and connecting plenums with one coat of flat black paint, or provide all such items factory prepainted.

B. For roof-mounted equipment, provide factory pre-finish on exposed surfaces.

C. Touch-up scratches and abrasions to be invisible to the unaided eye from a distance of 5 feet.

3.7 INSTALLATION OF DUCTWORK

A. Ductwork shall be delivered to the Project site with surfaces clean and free of loose dirt and rust. Special care shall be exercised by the Contractor to store the duct in a clean area to prevent the accumulation of dirt prior to installation. Fabricated or partially fabricated duct sections shall not be stored in open fields or on dirt areas surrounding the construction site.

Paved areas may be used, if available, provided adequate protection is provided to prevent the accumulation of dirt on duct surfaces. If possible, the Contractor should arrange to deliver duct to the project site and store on the floor of the area in which it is to be installed.

B. Before installation of ductwork, the Contractor shall inspect each section of duct and wipe internal surfaces clean. At the end of each Work period, or when ends of duct are left installed for future extension, the open ends shall be tightly closed off with a plastic sheet and taped securely to the open end of the duct.

C. Construct and install sheet metal in accordance with latest SMACNA recommendations. Provide variations in duct size and additional duct fittings as required and approved by the Architect at no extra cost to the owner.

D. The throat radius of bends shall be 1-1/2 times the width of the duct. Provide turning vanes in any mitered turn greater than 45 degrees.

E. Transition slopes shall be no less than one to five where space permits.

F. Abrupt offsets in the duct system greater than 30 degrees will not be allowed.

3.8 TEMPERATURE CONTROL INSTALLATION

A. Install wiring and tubing parallel to walls and floors and securely clipped to structure or mechanical system components. Group parallel runs for neat appearance.

B. Install room thermostats and other control devices at 48 inches above finished floor unless a lower mounting height is required for access by handicapped.

C. Install outside air sensor in a location where it is not directly affected by radiation from the sun or any heat generating device or by a conditioned air stream or any other location that would produce a false reading.

D. Upon completion of the installation calibrate all equipment and adjust controls for proper operation.

3.9 REFRIGERANT SYSTEM CHARGING PROCEDURE

A. Pressurize the system with refrigerant and hold for 24 hours with no drop in pressure; test joints and equipment for evidence of leaks after satisfactory pressure test.

B. Provide 1/2" angle type charging and purging valves adjacent to high and low side of the condensing unit to accomplish the procedure described hereinafter. Connect the vacuum pump to both the high and low side of the system. Do Work when ambient air temperature is above 60 degrees F during the evacuation process.

C. Operate the vacuum pump until the system is evacuated to 2.5 mm Hg absolute. Break the system vacuum with nitrogen or refrigerant.

D. After the system has been evacuated to 2.5 mm Hg absolute, close the vacuum pump suction valve and stop the pump.

E. Charge system to required capacity with specified refrigerant.

3.10 CONTROL DEVICE IDENTIFICATION LABELS

A. Thermostats and Exhaust fan switches shall have labels mounted on or just above the control device labeled with the equipment being controlled. As an example, for a exhaust fan controlled by a switch the label would read “EXHAUST FAN # 1” or if a thermostat the label would read “AC-1”.

1. Labels shall be 2" x 1" x 1/8" thick Formica/plastic engraving stock beveled on both sides and with two 3/16" diameter holes near the top uppermost tag corners.

2. Labels shall be white with 3/8" high red engraved letters.

3. Labels shall be attached to the equipment with adhesive.

3.11 WARRANTY

A. The contractor shall warranty all of the systems for proper operation installed by the contractor for not less than one calendar year from date of project completion. This completion date shall be set by the Architect or owner.

3.12 SHOP DRAWINGS

A. The Contractor shall prepare shop drawings covering duct systems, equipment and Mechanical Room piping systems. The drawings shall be prepared in 3/8" scale and shall be submitted to the Architect for approval prior to any fabrication. In preparing the shop drawings, the Contractor shall coordinate the location of duct, piping and equipment with the Work of other trades.

3.13 MECHANICAL SYSTEM START-UP RESPONSIBILITY

A. Start up Mechanical Systems, and perform any such Work as may be required to adjust the systems to meet the requirements of the Contract Documents. Air distribution balancing shall be performed in accordance with Article "MECHANICAL SYSTEMS BALANCING".

B. Install new clean specified filters in equipment containing filters immediately prior to owner occupancy. Contractor to bear all costs for this work.

3.14 MECHANICAL SYSTEMS BALANCING

A. Testing and air balancing shall be performed by an independent balancing company certified by Associated Air Balance Council (AABC), National Environmental Balancing Bureau (NEBB) or Testing, Adjusting, and

Balancing Bureau (TABB). Testing and balancing shall be performed by a company other than the mechanical system installers/contractor. The name of the firm that the Contractor proposes to engage to perform this Work of balancing the system shall be submitted to the Engineer for approval prior to commencing the Work.

B. After Systems have been tested as outlined, air and water flow rates shall be balanced, and control devices adjusted. Balance and testing shall not begin until systems have been completed and are in full working order. Upon completion of the balancing operation and prior to final acceptance of the systems, the balancing firm shall submit a report, with six (6) copies, certifying to the proper performance of the system for approval by the Mechanical Engineer.

1. The following information shall be included in the Air Side Report:

   a. Fan speeds.

   b. Motor current readings and voltage readings.

   c. Air quantities in CFM at supply, return, exhaust terminals, and outside air intakes, both at design value and actual measured value. Test and adjust each terminal to within +10% of design requirements.

   d. Air velocities in FPM at supply, return, and exhaust terminals at design value and actual measured value.

   e. Positive static pressure, negative and total pressures and total air quantities for each fan system.

   f. Equipment nameplate data.

END OF SECTION 23 00 00

SECTION 23 00 13

GENERAL MECHANICAL REQUIREMENTS

PART 1 - GENERAL

1.1 DESCRIPTION

A. Related Documents:

1. The other Contract Documents complement the requirements of this Section.
2. Division 1 - General Requirements applies to the Work of this Section.
3. Where requirements of this Section exceed those in other Contract Documents, Contractor shall comply with the requirements of this Section.

B. Codes and Regulations:

1. In addition to complying with the specified requirements, comply with pertinent regulations of governmental agencies having jurisdiction.

C. Included: Work includes, but is not limited to the following:

1. Heating, Ventilating, Air Conditioning and System Balancing
2. Plumbing
3. Fire Protection
4. Carpentry and metal Work required for Work of this Section and not specifically shown under another Section. Openings in concrete or masonry construction shall be either core drilled or saw cut unless indicated otherwise on Drawings.
5. Excavation and Backfill
6. Coordination Drawings

D. Related Work:

1. Painting (Division 9)
2. Cutting and Patching (Division 1)
3. Low voltage electrical control (Division 16)

1.2 DEFINITIONS

A. Furnish: Purchase and deliver to job site in new condition.

B. Install: Receive and store at job site until required; place secure and connect; furnish required appurtenances.

C. Provide: Furnish and install as defined above.

D. Section: Refers to a Section of these Specifications.

E. Standards: The issue in effect as of the date of the contract documents.

1.3 PROJECT RECORD DRAWINGS

A. Comply with pertinent provisions of Architectural Sections (Division 1).

1.4 SERVICE INTERRUPTIONS

A. When Work of this Section requires temporary shutdown of existing systems for connections, the shutdown shall be made only during pre-arranged time agreeable to the Owner.

1.5 CORRELATION, INTERPRETATION AND INTENT OF CONTRACT DOCUMENTS

A. The Mechanical Drawings are, in general, made to scale and the Contractor may obtain approximate distances and dimensions by scaling the Plans. It is distinctly understood, however, that it is done entirely at the Contractor's responsibility. Refer to Architect's Plans and Specifications for construction details, which will affect the Work and equipment. Examine the Architectural, Civil, Structural, Mechanical, Electrical, Landscape, Irrigation, Data, Fire Protection and Plumbing Plans and Specifications to ensure that this work does not conflict with the above trades. Plumbing, Mechanical and Electrical Plans are diagrammatic and, therefore, do not necessarily represent the exact installation. However, pipe sizing for utility services and ductwork are calculated per their respective codes and Standard Engineering Practice and shall be installed as sized from point of origin to terminal point. It shall remain the Contractor's responsibility to submit Shop Drawings if he/she has any questions about the final arrangement. Nothing on these Plans or Specifications shall be construed to permit work not conforming to all applicable codes and regulations.

PART 2 - PRODUCTS

2.1 ACCESS PANELS

A. If not called for under other Sections, furnish Milcor, Elmdor, or Jay R. Smith access panels where shown on the Drawings or required for maintenance access to completed Work of this Section. Submit size, type, and location of proposed access panels not specifically shown, for review by Architect.

B. Access panels shall be constructed of 16 gauge prime coated steel or stainless steel with screwdriver operated cam latch, concealed hinges, and fire rating equal to adjacent construction.

C. Provide flush type doors with:

1. Stainless steel finish for tiled surfaces.

2. Prime coated finish for other surfaces.

2.2 FLASHING

A. Provide watertight flashing at all openings through exterior walls and roof. Refer to Architectural Drawings.

2.3 BELT DRIVES

A. All belts shall be "Vee" type, or approved equal. Sheaves shall be adjustable and shall be sized to drive fan at scheduled RPM when set at midpoint of adjustment range. All belt drive assemblies shall be rated at 150% of drive motor horsepower. OSHA approved belt guards shall be provided over all drive assemblies. The Contractor shall change any belts and drives as required to produce the specified CFM.

2.4 VIBRATION ISOLATION AND NOISE CONTROL

A. All fans, heating and ventilating units, air conditioning units, blowers and similar equipment shall be securely mounted to and/or supported from the structure.

B. Isolate all bare water piping from structural members or hangers with "Trisolators" or submitted and approved equal insulating sleeves. Install hangers on outside of insulated jacket on all insulated lines.

2.5 WEATHERPROOFING

A. All equipment exposed to weather shall be protected by means of a suitable finish (i.e. paint). All fan cabinets, roof-mounted equipment, and ductwork shall be fabricated in such a manner to prevent leakage through seams and joints. Water rated, exterior hoods shall be provided over motors, belts, and other devices to insure against damage by water. At all locations where pipes and/or ducts penetrate exterior walls, or roofs, suitable rain tight flashing shall be provided.

2.6 PIPE WRAPPING

A. All pipe, metal components, and joints buried in ground shall be primed and protected with 10-mil tape double wrapped or approved equal per IAPMO IS 13-2006. Before tape application, all bare pipe and fittings to be wrapped must be coated with pipe wrap primer. Stretch first layer of tape to conform to the surface while spirally half-lapping, apply a second layer, half-lapped and spiraled as the first layer with spirals perpendicular to first wrapping. In lieu of tape wrap, heat shrinkable 10-mil minimum thick polyethylene sleeve may be used.

B. When applying tape, use only enough pull to cause the tape to properly conform to the irregular surfaces of the item. The proper amount of pull is reached when the tape surface is smooth without any wrinkles. Continue tape 4" above grade. End overlaps should point down. Tape shall be applied per manufacturer’s installation instructions.

2.7 ELECTRIC MOTORS AND ELECTRICAL DEVICES

A. All Electric motor current characteristics are as shown in equipment schedules on drawings and as specified hereinafter in this Specification.

The Contractor shall refer to the Electrical Plans and shall confirm all motor voltage, amperage and phase characteristics before processing submittals or ordering equipment. If any equipment is installed different from the supplied electrical power, it is the contractor's responsibility to correct equipment to the required electrical characteristics.

B. All electrical devices of a type normally listed by Underwriters Laboratories, Inc. shall bear U.L. label of approval.

C. Motor starters shall be provided complete with properly sized thermal overload protection and other appurtenances necessary for motor control specified. Mount starter adjacent to equipment. See electrical drawing. Maintain minimum of 3' clearance to front of device.

D. Motor Starters: Shall be NEMA I or III as appropriate, general purpose, weather-resistant, with watertight enclosure where required.

2.8 PAINTING AND FINISHING

A. Provide the coating specified below unless otherwise specifically called for under Painting, Division 09900. Exclude non-ferrous items, stainless steel, items to be insulated, and factory-finished items. Conform to requirements of the Painting Section where requirements are not specified in this Section.

B. All materials used, except as otherwise specified in carrying out the provisions of the contract, are to be Fuller-O'Brien manufacturer or approved equal. Numbers given below are Fuller-O'Brien Company designation unless noted otherwise.

1. Primer coat for all exterior and interior materials: 1 Coat - Primer #66850

2. Finish coats as listed below:

Exterior concrete and concrete block	2 Coats – Semi-Gloss #664XX
Interior concrete and concrete block	2 Coats – Semi-Gloss #214XX
Exterior metal	2 Coats – Semi-Gloss #664XX
Interior metal	2 Coats – Semi-Gloss #214XX
Exterior galvanized metal	2 Coats – Semi-Gloss #664XX
Exterior stucco	2 Coats – Flat #668XX
Interior of Grilles, Diffusers, and Registers	1 Coat – Flat (black) #31202

3. Furnish equipment with factory or field-applied prime coat and finish coat of enamel. Restore damaged finishes to match original.

PART 3 - EXECUTION

3.1 GENERAL EQUIPMENT INSTALLATION REQUIREMENTS

A. Install equipment to provide neat appearance, required manufacturer's access, and required space to allow replacement or maintenance. Provide bases, supports, anchor bolts, and other items required to install equipment. Installation shall be level and braced per CBC.

B. Equipment shall operate quietly and without objectionable vibration. Excessive vibration, other than from specified equipment operating at optimum conditions, shall be the Contractor's responsibility and shall be eliminated as directed by Architect.

3.2 COORDINATION OF WORK

A. Coordinate Work of this Section with Work of other Sections to avoid conflicts. If required, provide shop drawings and submit to Architect for approval.

B. Insure that Work of other Sections is suitable to accommodate Work of this Section.

3.3 ADEQUACY OF FURRING

A. Conceal piping and ductwork in spaces provided unless specifically shown otherwise. If spaces are inadequate, notify Architect prior to ordering materials and fabrication of components.

3.4 PROTECTION AND CLEANING

A. Protect equipment from dirt, moisture, and mechanical damage during construction. Restore or replace damaged equipment to original condition.

B. Keep interior of piping and ductwork free of foreign material during construction. Flush piping systems with test medium specified under Piping Tests before installing equipment and appurtenances or making final connections.

3.5 CLOSING-IN OF UNINSPECTED WORK

A. Do not conceal or cover Work before tests and observations are completed. Uncover Work prematurely closed in and repair resulting damage to all Work, if requested by Architect, Engineer, or Project Inspector.

3.6 DAMAGE

A. Repair or replace items damaged by leaks or overflow from Work provided under this Section and for any damage to any part of the project site, for a period of 1 year after notice of completion date. This is in addition to and not a limitation of other rights the Owner may have against the contractor under the Contract Documents.

3.7 PAINTING AND FINISHING

A. The contractor shall examine carefully all surfaces to be finished under the contract; and before beginning any of his work shall see that the work of other trades has been left or installed in a workmanlike condition to receive paint, or a particular finish.

B. The contractor shall take the necessary steps to protect his work and the work of other contractors during the time his work is in process and the

contractor shall be responsible for any and all damage to the work or property of other contractors caused by his employees or by himself.

C. Provide protective covers or drop cloths to protect floors, fixtures, and equipment. Exercise care to prevent paint being spattered on to surfaces which is not to be painted. Surfaces, from which such paint cannot be satisfactorily removed, shall be painted or repainted, as required to produce a finish satisfactory to the Architect.

D. Cracks, holes, or imperfections in concrete or plaster are to be filled with patching plaster and smoothed off to match adjoining surfaces.

E. All surfaces shall be in a proper condition to receive finish. Clean surfaces as necessary to receive paint. Remove all grease from metal surfaces before painting.

F. Each coat of paint shall be applied at proper consistency and brushed evenly, free of brush marks, sags, runs, and with no evidence of poor workmanship. Color between coats of paint shall differ; (Color variations between coats should be enough to impair hiding.) Care shall be exercised to avoid lapping of paint on glass or hardware. Paint to be sharply cut to lines. Finished paint surfaces to be free from defects or blemishes.

G. Exposed piping, ducts, and mechanical equipment (except for factory finished items) shall be painted. Exposed piping, except for identification banding, shall be painted to match surfaces adjacent. Each coat to be inspected when dry and subsequent coat not to be applied until approval received.

H. Paint all surfaces visible through grille, diffuser and register faces, flat black.

I. The contractor shall store all painting materials and equipment outside of the building. The receiving and moving of all paint materials and mixing shall be done outside of the building. Any other arrangements shall be made only with Architects approval.

J. All necessary precautions shall be taken to prevent fire. Rags, waste, etc., soiled with paint or cleaning material, shall be removed from the premises at the end of each day's work.

3.8 MECHANICAL SYSTEM TESTING

A. Furnish all test pumps, gauges, and equipment. Test all safety controls and devices.

B. For air tests, install a calibrated test pressure gauge in the piping system to observe any loss in pressure. Calibrate the test pressure gauge with a dead weight tester within 15 days before use and certify by initial and date on a sticker applied to the dial face. Maintain the required test pressure for the time indicated. Brush joints with a soapy water solution to check for leaks if the required pressure cannot be maintained.

C. After any test, repair all leaks found as directed and re-test as necessary until the system is proven tight.

D. Before applying test pressure to any piping systems the Contractor shall be responsible for isolating all equipment e.g. control valves, regulators, relief devices, tanks and any other line accessories, which would otherwise be damaged by the test pressure.

1. Soil, Waste, Vent, Roof, and Condensate Drainage:

a. Entire System: Tightly close all openings except the highest one. Fill to overflowing with water.

b. Sections of System: Tightly close all openings except the highest opening of the section under test. Fill section with water to test each section with a minimum 10-foot head of water except for the uppermost 10 feet of the system.

c. Allow to stand for (4) hours or longer, as required to complete the inspection.

2. Domestic Water: Fill with water and test at 150 psig. Retain for (4) hours.

3. Refrigerant: Pressurize the system with nitrogen to 150 psig and hold for 24 hours with no drop in pressure; test joints and equipment for evidence of leaks after satisfactory pressure test.

E. After all Systems have been tested as outlined, all flow rates shall be balanced, and all control devices adjusted. See Section 23 00 00.

F. The equipment and installations shall be operated by the Contractor and he shall demonstrate that all Systems are performing according to the requirements of the Plans and Specifications and to the satisfaction of the Architect, Engineer and Owner.

G. Acceptance Testing Requirements: For applicable acceptance tests see the energy compliance documentation. Acceptance testing shall be the responsibility of the mechanical contractor and shall be performed by an Acceptance Testing Technician who has been certified by a California Energy Commission approved Acceptance Test Technician Certification Provider Program. The Test and Balance Contractor can also be the Acceptance Testing Technician

3.9 CUTTING AND PATCHING

A. The Contractor shall do all cutting and patching which may be required for the installation of the Work under this Division of the Specifications. Patching shall be of the same quality, materials and finish as, and shall match accurately, all surrounding construction. No cutting of the Structure shall be permitted without the approval of the Architect.

B. Wherever concrete or paved surfaces are cut to provide for the installation under this Section, the Contractor shall restore the surfaces to their

original condition. Subgrade materials, concrete, and paving materials, along with the placement of same, shall be in accordance with the respective Sections of this Specification as they apply to the installation of such material.

3.10 EXCAVATION AND BACKFILL: (BURIED PIPES WITHIN THE BUILDING WALLS AND TO 5 FEET FROM THE BUILDING.)

A. Dig trenches straight and true to line and grade; bottom shall be left smoothed of rock points. Pipe shall be supported for the entire length on undisturbed, original earth. The minimum trench width shall be 16" and all pipe shall be 2 feet below the finished grade, minimum, wherever conditions permit. Sewer pipes to be below grade a s necessary to meet the slope and invert on the Drawing. Whenever substantial variations of pipe bury is indicated by field conditions, the proposed changes in depth of bury shall be submitted, in writing, to the Architect for approval.

B. All piping shall be laid on a bed of clean dry sand not less than 6" thick. The space between the pipe and the sides of the trench shall be backfilled with clean dry sand to a point 6" above the crown of the pipe. Both sides of the pipe shall be filled at the same time.

C. The remainder of the trench shall be backfilled with native soil in lifts no greater than 12" and shall be mechanically compacted by tamping so to maintain a minimum relative dry density of 95%, determined by California Impact Test Method No. 216.

D. All backfilling shall be brought flush with finished subgrade.

E. Excess material shall be removed from the site. Trenches shall be backfilled immediately after approval.

3.11 INSTALLATION OF PIPING, DUCTWORK AND EQUIPMENT

A. The installation of piping, ductwork, and equipment shall be made in such a manner to clear beams and obstructions. Do not cut into or reduce the size of plates or any load carrying members without approval of the Architect. Check Drawings and Work of others to prevent interference. Deviations of the Work determined by the Architect shall be installed by the Contractor without additional cost.

B. Install piping and ductwork promptly, cap or plug open ends of pipe. No piping shall be permanently covered by construction before inspection and approval. Piping and ductwork shall be installed in accordance with best practice and recommendations of the manufacturer.

C. Conceal piping and ductwork unless indicated otherwise. Inspect each piece of pipe, tubing, fittings, and equipment for defects and obstructions. Remove defective material from site. Install piping generally level, free of traps and unnecessary bends to conform with building requirements, and provide space for other work. Piping to be free of unusual noises. Avoid

any possible galvanic action by isolating dissimilar metals with suitable Dielectric Insulating Fittings.

D. Unless called for otherwise, hereinafter in this Specification or by specific detail on the Drawings, all water pipes in contact with structure and/or hangers shall be suitably isolated. In the case of uninsulated pipe, "Trisolators" or equal shall be used.

E. Protect enameled or polished equipment from damage, tool marks, etc.

3.12 STERILIZATION OF PIPES

A. After preliminary purging of the Systems, the entire domestic potable water system pertaining to Work under this Contract shall be chlorinated in accordance with American Water Works Association, State of California Health and Safety Code procedure for disinfecting water mains. A thorough flushing operation shall be run upon completion of sterilization. Contractor shall then arrange with local health authority for test on mains and water systems and provide three (3) copies of test results to the Architect.

3.13 EQUIPMENT IDENTIFICATION TAGS

A. Major pieces of equipment shall include, but are not limited to: water heaters, air conditioners, unit heaters, supply and exhaust fans, and shall be tagged.

1. Tags shall be 2" x 2" x 1/8" thick Formica/plastic engraving stock beveled on both sides and with two 3/16" diameter holes near the top uppermost tag corners.

2. Tags shall be white with 3/8" high red engraved letters.

3. Tags shall be attached to the equipment with bolts, screws or chains as per valves.

4. Tags shall have the following information:

a. Equipment number and nomenclature corresponding to the information on the mechanical contract drawings.

b. Examples:

WH	EF	AC
1	2	3

3.14 IDENTIFICATION OF PIPING SYSTEMS

A. Building Systems:

1. Piping systems installed anywhere within the scope of the Work shall be identified as to contents using a color banding and marking system as outlined and in compliance with Federal OSHA requirements.

2. This Work includes furnishing and application of all snap-around and/or self-sticking pipe markers. Formica valve tags, chains, wires, and related materials proper for the completion of the Work.

3. Pipe markers shall be permanently shaped vinylite plastic snap-around pipe markers as manufactured by Seton Nameplate Corporation, Wilmington Plastic Company, or approved equal.

4. A maximum of four basic background colors shall be used and they shall conform to the American Standards Association Standard A13.1, "Scheme For Identification of Piping Systems" The names of materials (pipe contents) shall be superimposed on these ANSI background colors. Work legends shall conform to ANSI A13.1 to avoid confusion and mistakes. Basic background colors and content classification are:

Yellow	Dangerous Materials
Red	Fire Protection
Bright Blue	Protective Materials
Green	Safe Materials

5. Pipe marking and installation shall be as follows:

   a. Apply "Plastic Pipe Marker" at each valve to show proper identification of pipe contents.

   b. Use an "Arrow Marker" with each "Pipe Content Marker". The Arrow shall always point away from the "Pipe Marker" and in the direction of the flow.

   c. If flow can be in both directions, use a double-header "Arrow Marker".

   d. Apply "Pipe Marker" and "Arrow Marker" at every point of pipe entry and exit where the line goes through the wall, floor or roof.

   e. Apply "Pipe Marker" and "Arrow Marker" on each riser and "T" joint.

   f. Apply "Pipe Marker" and "Arrow Marker" every 50 feet on long continuous lines.

   g. Identifying long continuous lines with "Pipe Marker and "Arrow Marker at every bay or aisle within the building. All branch runs from mains on the roof shall be identified with "Pipe Marker" and "Arrow Marker" at the point of takeoff.

   h. Apply "Markers" on the two lower quarters of the pipe where view is unobstructed. In this position "Markers" are read at a glance from ground floor level and dust will not obscure the "Marker". Roof-mounted piping "Markers" shall be so

located that they can be read from a standing position on the roof.

i. All identification markers located out of doors and exposed to the sun and the elements shall receive one coat of clear lacquer after application to the pipe, to seal edges and to act as a protective coating.

j. Each "Arrow Marker" must have the same ANSI background color as its companion "Pipe Marker". Arrow must point away from "Pipe Marker" and indicate direction of flow.

k. "Pipe Markers" shall be guaranteed to stay on pipe systems for a period of not less than five years.

6. Following is a list of, but not necessarily limited to, the more commonly used piping systems that require identification "Pipe Markers" and "Arrow Markers".

Abbreviations on Drawings	Wording to Put on Pipe Marker	ANSI Color Background
CHWS	Chilled Water Supply	Green
CHWR	Chilled Water Return	Green
HWS	Hot Water Supply	Yellow
HWR	Hot Water Return	Yellow
CW	Domestic Cold Water	Green
DI	Deionized Water	Green
DHWS	Domestic Hot Water Supply	Yellow
DHWR	Domestic Hot Water Return	Yellow
S	Gravity Sewer or Drain	Green
V	Vent	Green
G	Natural Gas	Yellow
A	Compressed Air	Blue
FM	Fire Protection Water	Red
ST	Steam	Yellow
CD	Condensate Drain Return	Yellow
VAC	Vacuum	Green
RL	Refrigerant Liquid	Yellow
RS	Refrigerant Suction	Yellow
All lettering shall be black on the yellow background and white on all other background.		

3.15 SEISMIC BRACING

A. It shall be required that pipes, ducts and conduits be supported and braced per the SMACNA "Seismic Restraints Manual Guidelines for Mechanical Systems", 2006 Edition.

B. When the SMACNA "Seismic Restraint Manual Guidelines for Mechanical Systems" does not specifically address the size of duct or pipe to be braced, the following shall apply:

1. All ducts shall be braced and guyed to prevent lateral or horizontal swing to the satisfaction of the Architect, Engineer, and State Inspector.

2. All pipes shall be braced and guyed to prevent lateral or horizontal swing to the satisfaction of the Architect, Engineer, and State Inspector. Absolutely, no "Plumber's Tape" shall be used anywhere on this project.

3.16 OPERATION AND INSTRUCTION

A. The Contractor shall furnish competent Technicians to supervise start-up operations of equipment specified by the Engineer and to instruct Owner's operators. The Contractor shall furnish six complete sets of operating instructions and service manuals to the Architect.

B. Instruction period shall be started after instruction books and service manuals have been submitted to and approved by the Engineer and shall be at hours (regular and non-regular) arranged by the Engineer.

C. Service manuals shall include oiling, cleaning, and servicing data, compiled in clearly and easily understood form and in a durable binder. Data shall show all serial numbers of every piece of equipment and complete list of replacement parts.

3.17 WARRANTY

A. The contractor shall warranty all of the systems for proper operation installed by the contractor for not less than one calendar year from date of project completion. This completion date shall be set by the Engineer.

END OF SECTION 23 00 13

SECTION 23 25 16

STRAIGHT RAIL VEHICLE EXHAUST REMOVAL SYSTEM

PART 1 - GENERAL

1.1 RELATED DOCUMENTS

A. Conditions of the Contract and portions of Division One of this Project Manual apply to this Section as though repeated herein.

1.2 SUMMARY

A. Provide all labor, materials, and equipment necessary to put in working operation a complete turnkey system to remove both diesel and automotive exhaust gases and particulate of operating vehicles within the confines of specified fire station(s). All necessary controls, motors, fittings, ductwork, blower(s), labor and all other equipment and materials specified shall be part of the work.

B. Section Includes:

1. Rail Material.
2. Top Mounting Suspension.
3. Support Legs.
4. Hydraulic Brake System.
5. Rail Splicing Joint.
6. Middle Rail Duct Connection.
7. Trolley Assembly.
8. Regulator Assembly.
9. Uncoupling Valve Assembly.
10. Upper Flexible Hose.
11. Lower Hose Assembly.
12. Safety Disconnect Coupling.
13. Collection Nozzle Assembly.
14. Manual Fill Valve.
15. Hose Saddle.
16. Electrical Controllers.
17. Air Moving Devices.
18. Ductwork System.

C. All items of equipment and materials described in these specifications are to be furnished, installed, and placed into proper

operating condition in accordance with good practice and manufacturer's written or published instructions.

1. The exhaust removal system shall provide virtually 100 percent complete evacuation of all diesel fumes at the source from start up to exit of the apparatus from the fire station. The diesel exhaust removal system shall be capable of delivering complete coverage for bays up to 110 feet in length. The system must be able to accommodate drive through and back-in bays to meet all the needs of the fire department.
2. The system shall not affect personnel boarding the apparatus. Hose loops shall not hang any lower then six feet from the bay floor. The hose assembly shall not come into contact with the vehicle other than one connection point to the vehicle's tailpipe. The hose assembly shall not touch or drag on the bay floor.
3. The exhaust system shall not block doorways, exits, and aisles in the apparatus bay, which could endanger the welfare of fire personnel or visitors.
4. To protect the apparatus electrical system from possible damage, the system bid shall not incorporate any type of electromagnetic device that requires the apparatus to be utilized as an electrical ground for systems operation.
5. The system must be designed and capable of capturing virtually 100% of the exhaust gas and particulate even in the event of a complete power failure. The system shall not detach itself from the apparatus for any reason during a power failure other then normal exiting of the apparatus bay. System shall discharge exhaust outside the station even in the event of a power failure.
6. The system shall under no circumstance allow exhaust leakage or bypass the nozzle.

1.3 QUALITY ASSURANCE

A. Engage a factory certified experienced installer to perform work of this Section who has completed installations similar in design and extent to that indicated for this Project, and who has a record of successful in-service performance. **No Exceptions.**

B. The manufacturer UL and CUL Certified and certified by ISO-9001, & the Air Movement and Control Association (AMCA) to ensure quality, consistency and reliability of products. Certification documents shall be provided and attached to the bid proposal. **No exceptions.**

C. Engage a firm experienced in manufacturing similar to that indicated for this Project and with a record of successful in-service performance.

D. Conduct conference at Project site. Review methods and procedures related to vehicle exhaust system installation.

1. Review access requirements for equipment delivery.

2. Review equipment storage and security requirements.

3. Inspect condition of preparatory work performed by other trades.

4. Review structural loading limitations.

5. Review that all components specified in this Section and related components specified in other Sections are accounted for.

1.4 DELIVERY, STORAGE, AND HANDLING

A. Packing, Shipping, Handling and Unloading: Deliver hoses with protective packaging. Store in original protective crating and covering and in a dry location.

1.5 PROJECT/SITE CONDITIONS

A. Existing Conditions: Verify dimensions installation areas by field measurements.

1.6 COORDINATION

A. Coordinate layout and installation with other work, including light fixtures, fixed equipment and work stations, HVAC equipment, and fire-suppression system components.

B. Coordinate location and requirements of service-utility connections.

1.7 REFERENCES

A. Air Movement & Control Association International, Inc.

1. AMCA Standard 500-D-98, "Laboratory Methods of Testing Dampers for Rating".

B. ASTM International.

1. Stainless Steel:

a. A240/A240M-04ae1 Standard Specification for Chromium and Chromium-Nickel Stainless Steel Plate, Sheet, and Strip for Pressure Vessels and for General Applications

b. Bright, Directional Polish: No. 4 finish.

2. Aluminum:

a. B209/209M-04 Standard Specification for Aluminum and Aluminum-Alloy Sheet and Plate

b. Powder-Coated Finish: Immediately after cleaning and pretreating, electrostatically apply manufacturer's standard baked-polymer thermosetting powder finish. Comply with resin manufacturer's written instructions for application, baking, and minimum dry film thickness.

3. Galvanized Steel:

a. A653/A653M-04a Standard Specification for Steel Sheet, Zinc-Coated (Galvanized) or Zinc-Iron Alloy-Coated (Galvannealed) by the Hot-Dip Process

1.8 BIDDER QUALIFICATION

A. Bids will only be accepted from companies that have an established reputation in the field of manufacturing and installing Diesel Exhaust Removal Systems. The bidder must be established in the business of Diesel Exhaust Removal Systems for a minimum of no less then eight (8) years. Bidder shall show proof that their system has been field tested and proven by supplying a list of not less then 100 fire department references (seven within the state the municipality is located in) to include phone number and contact name. Plymovent mandates only factory certified installers are allowed to install Plymovent Systems at Fire Stations. Bids will only be accepted from companies that have a local (within 200 miles of the job site) invertory of spare parts (minimum value of $10,000) and factory certified and trained service technicians to perform the required service maintenance and to ensure there is no interruption due to lack of locally stocked certified parts.

1.9 MANUFACTURER QUALIFICATIONS

A. Bids shall only be accepted by bidders supplying equipment from manufacturers that have an established reputation in the business of manufacturing Automatic Emergency Response Vehicle Exhaust Removal Systems for a minimum of no less than ten (10) years. The manufacturer must be ISO-9001 certified, UL and CUL Certified and certified by the Air Movement and Control Association (AMCA) to ensure quality, consistency and reliability of products. Certification documents shall be provided and attached to the bid proposal. **No exceptions.** Where the requirement calls for a packaged exhaust system to be provided, all items shall be the product of the manufacturer. The product offering must be a product that has been offered by that mfg. for a minimum period of ten (10) years. No prototypes or private label products by other manufacturers will be allowed. System bid shall have a life of

service of no less than 10 years to establish proof of quality, longevity and service. **No exceptions.**

PART 2 - PRODUCTS

2.1 MANUFACTURER

A. PlymoVent Corporation/Plymovent Industrial Ventilation Systems

B. 115 Melrich Road Cranbury, New Jersey 08512

C. USA
Telephone: (609) 395-3500

D. Toll Free: (800) 644-0911

E. Fax: (609) 655-0569

F. Web: info@plymoventusa.com

2.2 RAIL MATERIAL

A. One-piece continuous extruded aluminum rail in a minimum length of 19 feet (5791.2 mm) in an effort to reduce the points of leakage due to seams or connections. The construction profile shall be of a round profile type, diameter of 6.5 inches (165.1 mm) with a rail thickness of 0.175 inch (4.5 mm). The bottom portion of the rail shall have a continuous slot to accept a rubber seal.

1. Rail Material: Aircraft aluminum alloy Type AA-6063 (ASTM B209/B209M).

2. Aluminum Rail: Extruded as a one piece design unit to maximize the structural integrity of the rail and to minimize joints. Extruded into the rail profile shall be all necessary mounting guides, which will allow for support of the rail mounting hardware and airline support cable.

3. Mounting Channels: Provided continuously along both sides of the rail extrusion in order the proper positioning of all required mounting supports in accordance with codes. The rail shall allow the trolley/hose assembly to glide to the door threshold in a safe and effective manner. The extruded rail channel shall allow the whole rail to remain rigid and shall provide an area to attach bolts for splicing additional rails together for systems over 19 feet (5791.2 mm) long. The overall extruded rail lengths shall be 19 foot (5791.2 mm) standard.

4. Rail System: Equipped with a hydraulic braking system that limits travel of flex hose as the vehicle exits the building.

5. Hydraulic Brake: Incorporated into the end cap of the suction rail.

2.3 TOP MOUNTING SUSPENSION

A. Designed to attach with 2 mounting cleats to the mounting slots that were extruded into the rail profile. The top suspension mount support shall be zinc plated bright finish and provided with 2 mounting cleats with four 5/16 inch (7.9 mm) by ¾ inch (19 mm) hex head bolts to attach the mounting support to the rail.

2.4 SUPPORT LEGS

A. Manufactured and provided by the supplier of primary exhaust removal system (Equipment Manufacturer).

1. Support Leg Material: Aircraft aluminum alloy Type AA-6063 (ASTM B209/B209M).

2. Supports: Standard in 19 feet lengths. A minimum of one support with appropriate bracing shall be provided for every 10 lineal feet (3 m) to 12 linear feet (3.7 m) of rail profile. The support legs shall consist of a square outer profile with dimensions no less than 2 inch (50.8 mm) OD by 0.1 inch (2.54 mm) by with 0.4 inch (10 mm) fastening hardware provided. The vertical adjustable mounting foot shall be capable of attaching the leg assembly to a ceiling with a 30 degree pitch, complete with 3/8 inch (9.5 mm) hardware necessary for mounting the leg assembly to the top suspension mount. The support leg shall be equipped with round tubular zinc-plated steel knee brace with pressed ends in standard lengths of 20 inch (508 mm), 30 inch (762 mm) and 72 inch (1828.8 mm). The angle shall be completely adjustable to the leg support and mounted perpendicular and parallel to direction of the rail. The typical support angle shall be 45 degrees from the centerline of the factory provided support leg. The standard leg shall be capable of meeting a Seismic Zone 4 requirement. Vertical support and bracing shall be provided to safely secure the rail profile in accordance with building code and seismic standards which may apply. A minimum of one support with appropriate bracing shall be provided for every 10 lineal feet (3 m) to 12 linear feet (3.7 m) of rail profile.

2.5 HYDRAULIC BRAKE SYSTEM

A. Incorporated into the end cap of the suction rail profile. The hydraulic brake system must incorporate a hydraulic shock capable of reducing the forward impact of 1 to 4 suction trolleys which may be installed now or in the future to the exhaust rail system. This hydraulic shock shall be secured to a steel end cap fabricated of 6.25 inch (158.8 mm) diameter steel tubing with a wall thickness of 0.156 inch (4 mm) welded to a 0.156 inch (4 mm) steel plate with

formed 90 degree side rails for rigidity. The end cap shall have a removable circular end plate to facilitate an end feed duct connection and shall be a black powder coated finish. The hydraulic shock shall be capable of reducing to a full stop the trolleys in less than 4 inch (101.6 mm), without physical damage to either the rail profile or trolley that it is stopping.

2.6 RAIL SPLICING JOINT

A. The splice joint shall be formed aluminum extrusion equal to the internal diameter of the suction rail profile. The splice shall have a wall thickness of no less than .190 inches (4.8 m) in thickness and a length of no less than 8 inches (203.2 mm) from end to end. The rail splicing shall be safely secured by no less than 12- 3/8 inch 314.3 mm) by 1-½ inch (38.1 mm) bolts, nuts and lock washers. Each bolt shall pass through the exterior of the rail profile and splicing joint and be secured on the inside by a lock washer and nut. Self tapping bolts or screws are not acceptable.

2.7 MIDDLE RAIL DUCT CONNECTION

A. The rail duct connection shall be rectangular to an 8 inch diameter round transition fitting fabricated from 24 gauge galvanized steel (ASTM A653) with a double rubber U style lip seal. The rectangular slot shall be 19 inch (482.6 mm) long by 1-¾ inch (44.5 mm) high with a 3/8 inch (9.5 mm) external flange to slide into the rail profile.

2.8 TROLLEY ASSEMBLY

A. Gantry type trolley with sealed bearing loaded wheels designed to roll inside the internal rail profile flange. The trolley chassis shall be galvanized steel (ASTM A653) epoxy coated with a black finish. The chassis shall be fitted with a tapered cone.

1. Rubber Sealing Lips: Vulcanized Teflon strip covering 1-½ inch (38.1 mm) of the bottom edge of the sealing lip, which shall minimize resistance between the cone and the rubber sealing lips. The exhaust cone transition shall be a tapered slot design, which shall fit inside the suction rail profile. The tapered slot shall be equal or exceed in area the diameter of exhaust ventilation hose to which it is attached.

2. Trolley Assembly: Equipped with rubber impact bumpers at both the front and rear of the trolley chassis to eliminate metal-to-metal contact which could damage the trolley assembly. There shall be a system balancer assembly provided to aid in the delivery of the hose to the exit door.

3. Balancer Assembly: Self-adjusting weight spring tension balancer with a lifting capacity of no less than 31 pounds (31 KG). The balancer shall have a minimum diameter steel cable of .080 inch (2 mm) and have a safety link connection.

2.9 UNCOUPLING VALVE ASSEMBLY

A. Activate the release of the pneumatic collection nozzle located on vehicle's exhaust pipe. It shall be a whisker type valve that shall provide a single direction action and affixed to a mounting bracket directly onto the trolley chassis. The valve shall be activated when the whisker switch comes in contact with a disconnect plate located on the side of the rail profile.

1. Disconnect Plate: Provide activation of the uncoupling valve switch mounted on the suction trolley chassis.

2. Disconnect Plate: Capable of being mounted anywhere along the outside of the rail in a manner that allows for easy adjustment. One disconnect plate shall be provided for each trolley that is provided to allow for independent adjustment of exit speeds.

2.10 UPPER FLEXIBLE HOSE

A. Flexible exhaust hose manufactured for the sole purpose of venting high temperature exhaust gases.

1. Flexible Hose: Designed strictly for the harsh environment of rapid response and auto-release of a vehicle exhaust tailpipe.

2. Hose: Range from 4 inch to 5 inch diameters with varying lengths depending on the system length required ranging from 20 feet to 43 feet without joining or splicing connections.

3. Hose Material: High temperature double-ply fabric hose with silicone coated fiberglass inner layer & a silicone coated Nomex outer layer with a minimum overlapping thickness of 2-7/16 inches. This construction of hose must be capable of operating at continuous temperatures of 600 degrees F and intermittent temperatures of 700 degrees F such as are experienced when pump checks are performed inside the station.

4. Wire Helix: Bound and protected in laminations of hose winding. This shall be accomplished in a fashion, which eliminates any possibility of personnel coming in contact with an exposed hot metal helix. The hose shall further protect the internal wire helix from heat buildup and in turn add increased visibility to personnel.

5. Wear Strip: 9/16 inch (14.28 mm) wide and be provided as a safety yellow color. The bend radius of the high temperature hose shall be no less than 1.5 times the diameter of hose to ensure that hot gases are not restricted as they pass through

the system. Hoses utilizing an exposed metal helix will not be acceptable due to potential burn hazard and/or shock hazard from being utilized as a grounded, grounding or current carrying conductor for electromagnet connections. **No exceptions will be allowed.**

2.11 LOWER HOSE ASSEMBLY

A. Rigid 4 inch (101.6 mm) to 5 inch (127 mm) diameter by 2 foot (609.6 mm) long section of yellow and black hose identical in appearance to the upper hose assembly. Lower Hose: Support the pneumatic connection nozzle and chrome reducing elbow in a rigid fashion to allow for the operator to place hose collection nozzle onto the tailpipe without bending over. Lower hose is the only section of hose which shall disconnect from the upper hose assembly and act as a safety disconnect in the unlikely event the nozzle gets entangled.

2.12 SAFETY DISCONNECT COUPLING

A. 4-part segmented coupling with removable wear strips to protect the vehicle and disconnect from wear shall be incorporated in the design of the system. Coupling: Consist of two spun aluminum collars connected by a reusable-segmented coupling band. The release tension of this device shall be preset at 130 pounds and adjustable from 20 pounds to 206 pounds of separating force to accommodate varying exit speeds of vehicles. Coupling: Reusable.

2.13 COLLECTION NOZZLE ASSEMBLY

A. Collection Nozzle Assembly: Provide a substantially air tight seal around exhaust tail pipe when connected thus allowing for 100% source capture. The seal shall not allow for escape of life threatening exhaust gases, which may be present during the following conditions:

1. In the event vehicle's engine is accelerated above normal idle resulting in an exhaust velocity greater than 5000 feet per minute (25.4 meters per second).

2. In the event that the output velocity or CFM of the exhaust exceeds the manufacturers normal capture velocity or CFM of exhaust system.

B. Nozzle: Automatically adjust its internal orifice to accept any tailpipe ranging from one inch through six-inch (152.4 mm) diameter. Nozzle Pressure: Not exceed 15 psi (10546 KG/m2). When connected to the vehicle’s tailpipe.

1. Nozzle Construction: High temperature synthetic rubber vulcanized to a high temperature synthetic fabric. A NOMEX inner liner shall be provided for the primary temperature

source at the tailpipe to act as a friction barrier. The chrome-reducing elbow that connects to the connection nozzle shall be fabricated using continuous welded construction.

2. Angle of Transition: No less than or greater than 67 degrees from the centerline of the reducer.

3. Chrome Reducer: Incorporate a primary expanded metal debris screen, which is permanently affixed by welded seams to the inside opening of exhaust fitting.

2.14 MANUAL FILL VALVE

1. Located 6 inches (152.4 mm) above safety release coupling approximately 4 feet (1219.2 mm) from floor, sliding/push button type for manual or automatic release. In its design this valve shall incorporate in its design a handle which the operator may easily operate in a standing position. The attachment of the collection nozzle shall not position the operator's breathing zone closer than 36 inches (914.4 mm) from the exhaust tailpipe. The automatic release of the connection valve shall be no greater than 3 psi (2109 KG/m2) shift pressure to activate the automatic nozzle deflation.

   a. Primary Air Supply: Accomplished by means of a compression type fitting. The regulated air supply line to collection nozzle shall be designed to safely release from the upper hose at a pressure no greater than 80 lbs. (362.8 KG)

2.15 COMPRESSED AIR FEATURES

A. Airlines: ¼ inch (6mm) OD tubing capable of exposure of high temperature air stream inside the ventilation hose and duct. Airlines: Fed through the exterior of the hose through Teflon and brass grommets. Airlines: Fed through the exterior of the duct through high temperature rubber grommets to protect against abrasion. Unless a fire station air compressor is to be utilized the bidder shall provide a quiet operating compressor to be located proximate to the vehicle bays. It shall also be located so that preventative maintenance can be performed quickly and effectively. The operation of the compressor running inside station shall not generate sound decibels in excess of 50 dB. The compressor shall be equipped with a filter/dryer to ensure the conveyance of clean dry air to the pneumatic controls incorporated in the auto-release ventilation system.

2.16 HOSE SADDLE

A. Fabricated of a rubber molded cushion specifically manufactured for the sole purpose of suspending high temperature exhaust

ventilation hose in a rapid response and auto-release application. The design of the saddle shall smoothly transition the direction of the hose during its travel along the track. Securing clamps shall be provided including a link fastener, for the purpose of mounting it to the balancer safety link.

2.17 ELECTRICAL CONTROLLERS

A. Controller: Built and supplied by a UL recognized and listed exhaust system manufacturer. Controller shall carry the UL - CUL listing label as an “Enclosed Industrial Control Panel.” Individual components listed by UL - CUL shall not satisfy the above requirement. Manufacturer shall undergo monthly inspections by UL to verify all requirements and standards are met as outlined by UL. The controller shall be delivered as an Operating System Three series controller or an approved equal to the specifications to follow.

B. Electrical Controllers: Bear a visible UL listing label as proof of subscribership and shall be validated by UL www.ul.com/database/ as an “Enclosed Industrial Control Panel”. Certification documents shall accompany bid documents.

1. Manufacturer Name: _____

2. UL File No.: _____

3. Electrical controller and manufacturer shall be recognized and listed by UL. Controller shall be manufactured in accordance with Underwriters Laboratories standard UL-508 for “Enclosed Industrial Control Panels”. The electrical controller shall include a Class 1 limited energy control circuit. Enclosures shall be NEMA 12 rated and UL listed as Type 12. The electrical control components shall be provided and mounted in an electrical enclosure to restrict access to internal components of the controller by authorized personnel only.

C. Controller Performance: Designed to sense the output pressure and temperature change inside the ductwork system, which is normally generated by any internal combustion engine designed to propel a motor vehicle. The operating logic shall be designed to complete this cycle. At any point in time when a collection device is connected to a motor vehicle's exhaust tailpipe, as the operator starts the vehicle, the controller shall automatically sense the engine's output pressure or temperature of the exhaust and in turn energize the electrical contactor which will supply power to the AMCA certified spark resistant fan motor. Through the use of an adjustable timer the controller shall keep the contactors energized for up to six minutes in accordance with the stations response

requirement. If the responding vehicle does not disconnect from the exhaust ventilation system in less than the designated setting, the temperature override switch shall override the time delay to ensure continuous system operation. This automated function will work for as long as the exhaust gas temperature is in excess of the setting on the heat sensor located in the ductwork system. This cycle shall not allow the electrical contactor, which energizes the exhaust fan, to short cycle or stop the fan while the system is connected to an operating vehicle.

D. Motor Control Contactor: Allen Bradley Industrial Electrical Contactor 100C series. The contactor shall be UL - CUL listed as an approved component.

E. Motor Control Overload Relay: Allen Bradley 193 ES series. Overload relay shall have an adjustable trip range to meet the proper full load amperage of the blower motor.

F. Soft Touch Controls: Incorporated on the face or the access door of the controller by the use of an adhesive backed Lexan membrane type label to prevent water infiltration, which would void the NEMA 12R rating. Label: Provided and secured permanently to the exterior of the electrical controller. Label: Include the name of the manufacturer, address, telephone number, user instructions and any warnings or cautions required by Underwriters Laboratories.

1. Auto Start: This mode of operation shall be strictly for normal day to day use, as it would apply to receiving an emergency call and leaving the station. Any one or combination of the three devices listed below in Paragraph H shall activate the system. The system shall maintain itself in the Auto Start mode and always return there after the Stop sequence has been initiated. The controller shall not have a permanent off position due to the potential health hazards of diesel exhaust components.

2. Stop: This mode of operation shall be a system override to shut down the system manually. Upon activating this mode of operation, the exhaust system blower shall shut down. After a period not to exceed three seconds the controller shall automatically return to the Auto Start ready mode. This shall be a safety feature to prevent a potential health hazard from carcinogenic diesel exhaust leakage from systems having an undesirable open nozzle.

3. Hand Mode: This mode of operation shall be a system override to run the exhaust system blower continuously for the purpose of running the vehicles indoors for equipment checks during inclement weather. Upon activating this mode of operation, the exhaust system blower shall start and run

continuously until the Stop mode is activated at which point the system will automatically return to the Auto Start ready mode within a maximum three second time period.

G. System Indicator LED's: Show system status at all times.

1. Auto Start Indicator: Indicate the system is in the fully automatic mode of operation and that power is on to the controller.

2. Fan On Indicator: Indicate that power is being applied to the system blower and the controller is operating normally.

3. Filter Status Indicator: Indicate, if flashing, excessive pressure loss across the filter bank media. Consequently, the filter must be serviced to maintain optimum efficiency of the system.

4. Stop Indicator: Indicate the fan has been manually de-energized and will return to the Auto Start ready sequence in less than three seconds to prevent the system blower from being left in the Off mode.

5. Manual Run Indicator: Indicate the fan is operating in a continuous run mode until interrupted by the stop mode activation.

H. Controller Transformer: UL listed industrial control circuit transformer sized to properly supply all components so that only one transformer shall be required. Transformer shall be provided with multi-tap primary for 115, 208, 240, 277, 400, 480, and 600VAC, and 24, 120, 230VAC secondary operating on 50 or 60 hertz with a capacity of 90 volt amperes.

I. Control Circuit Protection: By the use of primary and secondary fuses (NEC code ref. 430-72) to meet UL requirements. The primary shall be protected by a pair of FLQ style fuses rated at 1.6 amps for voltages under 400V and a pair of .75 amp fuses for voltages over 400V. The primary fuse holder shall have a standard indicator light feature to aid in troubleshooting blown fuses. A single glass fuse rated at 3 amps at 250V shall protect the secondary side of the control circuit.

J. Electronic Control Circuit Card: Solid state printed circuit board. The soft controls shall be an integral part of the control circuit card. The control circuit card shall utilize a potentiometer to adjust the length of the timing cycle from 7 to 360 seconds. It shall incorporate several different modes of operation and optional features.

K. Activation Devices:

1. Engine Start Switch: An engine pressure sensing type, capable of recognizing the output pressure of any type of

motor vehicle exhaust. The electrical contact shall be dry type or not to exceed 24V AC. There shall be one sensor per vehicle.

2. Thermal Start Switch: Temperature sensing switch of the snap disc type and adjustable from 90 degrees F (32 degrees C) to 130 degrees F (55 degrees C) to configure the system based on different exhaust temperatures. There shall be one sensor per vehicle.

3. Remote Control Transmitter and Receiver: Shall be an optional feature with three independent channels of control. The receiver shall operate on 12V to 24 V AC or DC. The handheld transmitter shall be molded out of a highly visible orange composite with a visor clip on the back making it rugged and easy to locate. It shall be powered by a 9 volt battery for ease of replacement and cost savings. Utilizing three sets of normally open and normally closed contacts allows the device to be used to control three separate functions from up to one quarter of a mile away.

   a. Channel A: Shall be capable of starting and stopping the exhaust system blower.

   b. Channel B: Shall be capable of operating the apparatus bay door upon entering or leaving the fire station, if desired.

   c. Channel C: Shall be capable of remotely controlling the traffic signal in front of the fire station, if so equipped.

L. Clean Filter Indicator Alarm: Used in conjunction with the optional Unifilter for filtering diesel exhaust particulate before release to the atmosphere. The clean filter indicator shall monitor the pressure loss across the filter bank media. Once the useful life of the filter has been depleted the pressure differential switch will signal a high-pressure loss and flash the “Fan On” indicator while the exhaust blower is running

M. Electrical Wiring: Run in wire channel to allow for easier identification of the wiring circuits and for a neat appearance. All wiring circuitry shall meet International Electrical Code and UL standards for proper size, bending radiuses (International Electrical Code) and terminations.

N. Electrical Terminal Block: 600 V, UL rated and recognized. It shall provide individual connection points for remote controls, clean filter indicator and power connections. The primary and secondary control wiring fuses shall be incorporated into the terminal block as one unit.

O. Product Manual: Shall be provided with each electrical control box supplied. The product manual shall include a description of components with part numbers inclusive to the controller. It shall include a wiring schematic showing all internal circuitry as well as all field installed wiring connections to the controller.

P. Electrical Interference: To protect the apparatus and communications, designs that allow any possibility of electrical back-feed or induced current which may interfere with a central services communication or onboard vehicle computer logic or navigational equipment will not be accepted.

2.18 ELECTRICAL SYSTEM

A. Station Electric Supply Panel: The power circuit for the “Emergency Response Vehicle Exhaust Removal System” shall originate in a circuit breaker panel board of the appropriate size to handle the load. Fan circuit shall be supplied by a UL listed, HACR rated circuit breaker (HACR rating is specifically for motor type loads) of the same type as indicated by the manufacturer of the circuit breaker panel or a dual element time delay fuse for fuse style panels. The circuit shall be clearly marked on an engraved ledger plate or in ink on the panel schedule as “Emergency Response Vehicle Exhaust Removal System”.

B. OS-3 Automatic Controller: Built and supplied by a UL recognized and listed exhaust system manufacturer. Controller shall carry the UL - CUL listing label as an “Enclosed Industrial Control Panel”. Individual components listed by UL shall not satisfy the above requirement. Manufacturer must undergo monthly inspections by UL to verify all requirements and standards are met as outlined by UL. The controller shall be delivered as an Operating System Three series controller or an approved equal to the specifications in 2.17 Electrical Controllers. The controller shall be mounted 6 feet (1829 mm)to the top of the cabinet AFF (above finished floor). A safety disconnecting means must be within sight of the controller for servicing and for safety reasons. If the supply panel is not within sight, a separate disconnecting means is required beside the controller (NEC code ref. 430-102 (a). Safety disconnect shall be capable of being locked in the off and on position to follow lockout, tag out procedures. See attached Table 1-1 for proper Square D part number of safety disconnect switch.

C. Power Wiring Conduit: Minimum of EMT utilizing compression type fittings for damp locations such as apparatus wash down areas (International Electrical Code). Conduit shall be supported with a conduit strap every 10 feet (3 m) and within 3 feet (914.4 mm) of each box or termination, (International Electrical Code and local modifiers.).

D. Power Wiring from Supply Panel to OS-3: THHN stranded copper wire consisting of a flame retardant, heat-resistant thermoplastic insulation with a nylon jacket for abrasion, gas, and oil resistance and rated up to 600 volts.

E. Low Voltage Control Wiring: Minimum of a 14/2 multi-conductor shielded cable (Anixter part number #2AS-1401POS or equivalent) to meet UL standards for the controller's low voltage field wiring. Termination procedure shall be as follows; the shielded cable shall be stripped back inside the control cabinet, the mylar foil shield and silver drain wire are to be twisted together and secured under the screw in the grounding lug inside the control cabinet. Terminations at each sensor must leave foil shielding and drain wire intact and at no point shall it come into contact with ground. There shall be only one connection to ground.

F. Low Voltage Control: Encased in a minimum of ½ inch (12.7 mm) EMT from the OS-3 Controller to the attic or building steel where it shall terminate with a EMT connector with a threaded plastic bushing. Conduit: Supported with a conduit strap every 10 feet (3048 mm) and within 3 feet (914.4 mm) of each box or termination (International Electrical Code). The 14/2 multi-conductor shielded cable (Anixter part number #2AS-1401POS or equivalent) shall be supported by the building structure and ran in a manner that the cable will not be damaged by normal building use (International Electrical Code and local modifiers.), securely fastening it with nylon tie wraps every 24 inches (609.6 mm) to 36 inches (914.4 mm). Draping of the cable perpendicular to building steel or support members will be unacceptable.

G. Power Wiring from OS-3 to Fan Motor: Minimum of EMT utilizing compression type fittings for damp locations such as apparatus wash down areas (NEC code ref.348-10). Conduit shall be supported with a conduit strap every 10 feet (3048 mm) and within 3 feet 914.4 mm) of each box or termination (International Electrical Code and local modifiers.). Conduit shall extend through the outside wall through a hole of the proper size and terminate directly into the back of the safety disconnect with the appropriate connector and sealed with a silicon sealer or cement mortar. (Using fan model number select appropriate wire and conduit size from Table 1-1).

H. Fan Safety Disconnect: Square D, non-fusible, NEMA 3R rated for wet locations, mounted adjacent to the AMCA Certified blower. Safety disconnect shall be capable of being locked in the off and on position to follow lockout, tag out procedures. (Using fan model number select appropriate safety disconnect from attached Table 1-1).

I. Liquid Tight Flexible Metal Conduit: UL listed liquid tight flexible metallic conduit (Sealtite). Conduit will encase the load wires and ground wire from the safety disconnect switch to the blower motor. Conduit length not to exceed 4 feet (1219.2 mm) from disconnect to blower motor. The appropriate listed terminal fittings shall be used. (NEC code ref.351-7) (Using fan model select appropriate conduit size from attached Table 1-1).

J. Spark Resistant Blower: AMCA certified, designed and installed as a direct drive spark resistant blower (IMC code ref. 503.2) The motor shall meet current EPACT standards for energy savings. Fans utilizing steel impellers will not be accepted.

K. Temperature Switch: One for each apparatus connected to the system. The temperature switch shall be of the snap disc type and adjustable from 90 degrees F (32 degrees C) to 130 degrees F (54 degrees C). It shall be mounted on the ductwork 2 inches (50.8 mm) above the pressure switch by drilling a 1 inch (25.4 mm) hole, sealing the switch with silicon sealant and securing with 2 tek screws. Electrical connection shall be made with terminals provided or solder less type such as Thomas & Betts part no. 14RB-2577 or equivalent.

L. Pressure Switch: One for each apparatus connected to the system. The pressure switch shall operate at a maximum of 24VAC, pre-calibrated at .18 in. of water column. Mounting shall be accomplished by drilling a 3/8 inch (9.5 mm) hole 3 inches 76.2 mm) above the riser bracket and to the left of the regulator and threading the switch into the duct. The electrical connections shall be made with a 0.020 inch (.5 mm) by 0.187 inch (4.8 mm) female quick disconnect terminals, such as Thomas & Betts part no. 14RBD-18277 or equivalent.

2.19 AIR MOVING DEVICES

A. Centrifugal Fans: Direct drive centrifugal type, high pressure, single width, single inlet as required or indicated. Impeller Wheels: Radial design for high static pressure performance, spark resistance and made of Almag material to prevent static electricity build up. The impeller shall be dynamically and statically balanced and of the non-overloading type to provide maximum efficiency while achieving quiet, vibration-free operation. The fan housing shall be manufactured from a nonferrous material – Aluminum or epoxy coated galvanized steel (or) approved equivalent. The outlet configuration shall be top horizontal, bottom horizontal, or up-blast. The housing shall be capable of field reconfiguration in the event the mounting position needs to be changed for unforeseen reasons. For aesthetic reasons the fan motor and assembly shall be mounted on an epoxy coated galvanized steel (ASTM

A240/A240M) mounting base to prevent rust stains on the exterior of the building. The fan housing and motor mounting hardware shall be 16 ga. galvanized sheet metal or Type 304 stainless steel (ASTM A240/A240M) for serviceability reasons. The base shall have four (4) pre-punched openings at bottom of fan base for field attachment to either an exterior wall or roof mounting structure.

B. Fan Motor and Bearing: All 1 horsepower (746 watts) to 15 horsepower (11190 watts) motors shall be totally enclosed fan cooled (TEFC) continuous duty rated. The motors shall be dual voltage where applicable. Motors built after October 27th, 1997 shall comply with the government mandated “Energy Policy and Conservation Act” (EPACT) as outlined by the Department of Energy. The bearings shall be self-aligned, ball bearing type permanently sealed and lubricated. The exhaust discharge outlet shall be in compliance with International Mechanical Code and ACGIH recommendations (min. of 36" above roofline). Air intakes, windows, cascade systems, prevailing currents, communication equipment and building aesthetics shall be considered in the final location of the fan.

1. Teflon Shaft Seal: The fan shaft shall be steel and rotate in a non-sparking TEFLON seal to prevent leakage and to prevent hot exhaust gases from coming into contact with the motor bearings.

2. Variable Speed Drive: The motor shall be compatible with a variable speed drive unit.

C. Performance: The delivered volume shall take into account all the static regain of vehicle engine exhaust (based on an airtight connection at the tailpipe), lengths of ductwork, elbows, branches, shut off, wyes, etc. which accumulate the static pressure at the field inlet. The manufacturer’s provided fan(s) shall be performance guaranteed.

1. Fan Capacity: The Fan Capacity shall be sized as such as to deliver the required CFM at each hose drop to which the vehicle is attached.

a. The 4 inch (101.6 mm) hose system shall be designed to deliver a minimum of 500 CFM (2.9 M/Second) at a velocity of 5800 FPM (33.6 M/Second) at the hose and nozzle connection.

b. The 5 inch (127 mm) hose system shall be designed to deliver a minimum of 750 CFM (4.4 M/Second) at a velocity of 5800 FPM (33.6 M/Second) at the hose and nozzle connection.

c. The 6 inch (152.4 mm) system shall be designed to deliver a minimum of 1100 CFM (6.4 M/Second) at a velocity of 5800 FPM (33.6 M/Second) at the hose and nozzle connection.

D. Location: The preferable fan location shall be on the outside of the fire station as far away from any living quarters as possible so that firefighters would not be disturbed by the system activation. No blower fans shall be mounted inside the fire station. Silencers shall be provided when fan sound pressure level exceeds 64 dB.

2.20 DUCTWORK SYSTEM

A. Ductwork Type and Materials: UMC Class 2 or SMACNA Class II product conveying duct, meet or exceed criteria for construction and performance as outlined in Round Industrial Duct Construction Standards, SMACNA. Materials of construction unless otherwise specified for all ductwork and fittings shall be a minimum G-90 galvanized sheet metal (ASTM A653/A653M). Only when specified, Type 304 stainless steel (ASTM A240/A240M) shall be provided.

B. Ductwork Sizing and Gauges: Round pipe construction, with the range of available sizes not to exceed 10 inches (254 mm) in diameter. Duct gauge shall depend on diameter and a minimum operating pressure of 8 inches water gauge (1990 Pa). Acceptable Gauge and Reinforcement Requirements: Inner duct diameter 4 inches (101.6 mm) through 11 inches (279.4 mm) diameter shall be 22 gauge standard pipe (International Mechanical Code).

C. Ductwork Fittings: Round and have a wall thickness 2 gauges (one even gauge number) heavier than the lightest allowable gauge of the downstream section of duct to which they are connected (International Mechanical Code). Air Duct Branch Entrances: Factory fabricated fittings or factory fabricated duct /tap assemblies. Fittings: Constructed so that air streams converge at angles no greater than 45 degree (International Mechanical Code). All Seams: Continuous stitch welded and if necessary, internally sealed to ensure air tightness. Turning elbows shall be stitch-welded and used for all diameters and pressures. They shall be fabricated of 24 gauge galvanized steel and constructed as two piece with continuous welded seam construction fittings similar to those provided by Lindab Inc. Tapered Body Fittings: Used wherever particular fallout is anticipated and where air flow is introduced to the transport duct manifold.

D. Ductwork Design Velocities: Minimum of 3500 FPM (20.3 M/Second) to 4000 FPM (23.2 M/Second) transport velocity. Capture Velocity: 5500 FPM (31.9 M/Second) to 6000 FPM (34.8 M/Second) to extract 100 percent of the exhaust gases.

E. External Ductwork: Sized for the exact inlet and outlet of the exhaust fan blower. An exhaust rain cap shall be supplied and manufactured in accordance with EPA standard for free draft rain cap requirements. Included as an integral part of this rain cap shall be a back draft damper to provide protection from rain and other inclement weather.

F. Exhaust Penetrations: The core drilling shall be properly sized to reduce the diameter of the opening to the smallest possible size.

PART 3 - EXECUTION

3.1 EXAMINATION

A. Examine areas and conditions, with Installer present, for compliance with requirements for installation tolerances, service-utility connections, and other conditions affecting installation and performance of equipment. Do not proceed with installation until unsatisfactory conditions have been corrected.

3.2 PREPARATION

A. Provide surface/substrate preparation as required by the manufacturer's printed installation instructions. Do not proceed with installation is in proper condition to receive vehicle exhaust installation.

3.3 INSTALLATION

A. Install vehicle exhaust system in accord with manufacturer’s written instructions, original design and referenced standards.

3.4 ADJUSTING

A. Adjust vehicle exhaust system for proper operation. Replace any parts that prevent the system from operating properly.

3.5 CLEANING

A. Remove all debris caused by installation of the vehicle exhaust system. Clean all exposed surfaces to as fabricated condition and appearance.

3.6 PROTECTION

A. Provide protection of the completed installation until completion of the project. Repair any damage at no additional cost to Owner.

3.7 DEMONSTRATION

A. Provide the end user a minimum of one hour of hands-on demonstration and operation of the vehicle exhaust system and related equipment.

3.8 WARRANTY

A. Provide a written warranty for a period of one year from date of shipment for all components.

3.9 TRAINING

A. Provide training to fire department personnel in the daily use and maintenance of the vehicle exhaust removal system that has been installed and specified herein. The fire department shall be notified at least 7 days prior to the date scheduled for the training course. Training shall be for all personnel involved with the operation of the exhaust removal system to include all shifts required to man the particular facility. The Training session shall be performed in person by a recognized representative of the manufacturer of the exhaust removal system, in addition a training video shall be provided to the fire department.

1. Provide training to all shifts during their normal shift period.

END OF SECTION

Section 07 84 13

Penetration Firestopping

PART 1 - GENERAL

1.1 SUBMITTALS

A. Product Data: For each type of product.

B. Product Schedule: For each penetration firestopping system. Include location, illustration of firestopping system, and design designation of qualified testing and inspecting agency.

C. Product test reports.

1.2 CLOSEOUT SUBMITTALS

A. Installer Certificates: From Installer indicating that penetration firestopping systems have been installed in compliance with requirements and manufacturer's written instructions.

1.3 QUALITY ASSURANCE

A. Installer Qualifications: A firm that has been approved by FM Global according to FM Global 4991, "Approval of Firestop Contractors," or been evaluated by UL and found to comply with its "Qualified Firestop Contractor Program Requirements."

B. Source Limitations: Obtain through-penetration firestop systems, for each kind of penetration and construction condition indicated, through one source from a single manufacturer.

C. Fire-Test-Response Characteristics: Provide through-penetration firestop systems that comply with the following requirements and those specified in Part 1 "Performance Requirements" Article:

1. Firestopping tests are performed by a qualified testing and inspecting agency. A
qualified testing and inspecting agency is UL**,** or another agency performing testing and

follow-up inspection services for firestop systems acceptable to authorities having jurisdiction.

1. Through-penetration firestop systems are identical to those tested per testing standard referenced in "Part 1 Performance Requirements" Article. Provide rated systems complying with the following requirements:

a. Through-penetration firestop system products bear classification marking of qualified testing and inspecting agency.

b. Through-penetration firestop systems correspond to those indicated by reference to through-penetration firestop system designations

listed by the following:

1) UL in its "Fire Resistance Directory."

1.4 DELIVERY, STORAGE, AND HANDLING

A. Deliver through-penetration firestop system products to Project site in original, unopened containers or packages with intact and legible manufacturers' labels identifying product and manufacturer, date of manufacture, lot number, shelf life if applicable, qualified testing and inspecting agency's classification marking applicable to Project, curing time, and mixing instructions for multicomponent materials.

B. Store and handle materials for through-penetration firestop systems to prevent their deterioration or damage due to moisture, temperature changes, contaminants, or other causes.

1.5 PROJECT CONDITIONS

A. Environmental Limitations: Do not install through-penetration firestop systems when ambient or substrate temperatures are outside limits permitted by through-penetration firestop system manufacturers or when substrates are wet due to rain, frost, condensation, or other causes.

B. Ventilate through-penetration firestop systems per manufacturer's written instructions by natural means or, where this is inadequate, forced-air circulation.

1.6 COORDINATION

A. Coordinate construction of openings and penetrating items to ensure that through-penetration firestop systems are installed according to specified requirements.

B. Coordinate sizing of sleeves, openings, core-drilled holes, or cut openings to accommodate through-penetration firestop systems.

C. Do not cover up through-penetration firestop system installations that will become concealed behind other construction until each installation has been examined by building inspector, if required by authorities having jurisdiction.

PART 2 - PRODUCTS

2.1 PERFORMANCE REQUIREMENTS

A. Fire-Test-Response Characteristics:

1. Perform penetration firestopping system tests by a qualified testing agency acceptable to authorities having jurisdiction.
2. Test per testing standards referenced in "Penetration Firestopping Systems" Article. Provide rated systems complying with the following requirements:

a. Penetration firestopping systems shall bear classification marking of a qualified testing agency.

1) UL in its "Fire Resistance Directory."
2) Intertek Group in its "Directory of Listed Building Products."
3) FM Global in its "Building Materials Approval Guide."

2.2 PENETRATION FIRESTOPPING SYSTEMS

A. Penetration Firestopping Systems: Systems that resist spread of fire, passage of smoke and other gases, and maintain original fire-resistance rating of construction penetrated. Penetration firestopping systems shall be compatible with one another, with the substrates forming openings, and with penetrating items if any.

1. Manufacturers: Subject to compliance with requirements, available manufacturers offering products that may be incorporated into the Work include, but are not limited to the following:

a. A/D Fire Protection Systems Inc.
b. Grace, W. R. & Co.
c. Hilti, Inc.
d. Johns Manville.
e. NUCO Inc.
f. Tremco, Inc.
g. USG Corproation.

B. Penetrations in Fire-Resistance-Rated Walls: Penetration firestopping systems with ratings determined per ASTM E 814 or UL 1479, based on testing at a positive pressure differential of 0.01-inch wg.

1. F-Rating: Not less than the fire-resistance rating of constructions penetrated.

C. Penetrations in Horizontal Assemblies: Penetration firestopping systems with ratings determined per ASTM E 814 or UL 1479, based on testing at a positive pressure differential of 0.01-inch wg.

1. F-Rating: At least one hour, but not less than the fire-resistance rating of constructions penetrated.

2. T-Rating: At least one hour, but not less than the fire-resistance rating of constructions penetrated except for floor penetrations within the cavity of a wall.

3. W-Rating: Provide penetration firestopping systems showing no evidence of water leakage when tested according to UL 1479.

D. Penetrations in Smoke Barriers: Penetration firestopping systems with ratings determined per UL 1479, based on testing at a positive pressure differential of 0.30-inch wg.

1. L-Rating: Not exceeding 5.0 cfm/sq. ft. of penetration opening at and no more than 50- cfm cumulative total for any 100 sq. ft. at both ambient and elevated temperatures.

E. Exposed Penetration Firestopping Systems: Flame-spread and smoke-developed indexes of less than 25 and 450, respectively, per ASTM E 84.

F. VOC Content: Penetration firestopping sealants and sealant primers shall comply with the following limits for VOC content:

1. Sealants: 250 g/L.
2. Sealant Primers for Nonporous Substrates: 250 g/L.
3. Sealant Primers for Porous Substrates: 775 g/L.

G. Accessories: Provide components for each penetration firestopping system that are needed to install fill materials and to maintain ratings required. Use only those components specified by penetration firestopping system manufacturer and approved by qualified testing and inspecting agency for conditions indicated.

PART 3 - EXECUTION

3.1 EXAMINATION

A. Examine substrates and conditions, with Installer present, for compliance with requirements for opening configurations, penetrating items, substrates, and other conditions affecting performance of work.

1. Proceed with installation only after unsatisfactory conditions have been corrected.

3.2 PREPARATION

A. Surface Cleaning: Clean out openings immediately before installing through-penetration firestop systems to comply with firestop system manufacturer's written instructions and with the following requirements:

1. Remove from surfaces of opening substrates and from penetrating items foreign materials that could interfere with adhesion of through-penetration firestop systems.
2. Clean opening substrates and penetrating items to produce clean, sound surfaces capable of developing optimum bond with through-penetration firestop systems. Remove loose particles remaining from cleaning operation.
3. Remove laitance and form-release agents from concrete.

B. Priming: Prime substrates where recommended in writing by through-penetration firestop system manufacturer using that manufacturer's recommended products and methods. Confine primers to areas of bond; do not allow spillage and migration onto exposed surfaces.

C. Masking Tape: Use masking tape to prevent through-penetration firestop systems from contacting adjoining surfaces that will remain exposed on completion of

Work and that would otherwise be permanently stained or damaged by such contact or by cleaning methods used to remove smears from firestop system materials. Remove tape as soon as possible without disturbing firestop system's seal with substrates.

3.3 INSTALLATION

A. General: Install penetration firestopping systems to comply with manufacturer's written installation instructions and published drawings for products and applications.

B. Install forming materials and other accessories of types required to support fill materials during their application and in the position needed to produce cross-sectional shapes and depths required to achieve fire ratings.

1. After installing fill materials and allowing them to fully cure, remove combustible forming materials and other accessories not forming permanent components of firestopping.

C. Install fill materials by proven techniques to produce the following results:

1. Fill voids and cavities formed by openings, forming materials, accessories and penetrating items to achieve required fire-resistance ratings.
2. Apply materials so they contact and adhere to substrates formed by openings and penetrating items.
3. For fill materials that will remain exposed after completing the Work, finish to produce smooth, uniform surfaces that are flush with adjoining finishes.

3.4 IDENTIFICATION

A. Wall Identification: Permanently label walls containing penetration firestopping systems with the words "FIRE AND/OR SMOKE BARRIER - PROTECT ALL OPENINGS," using lettering not less than 3 inches high and with minimum 0.375-inch strokes.

1. Locate in accessible concealed floor, floor-ceiling, or attic space at 15 feet from end of wall and at intervals not exceeding 30 feet.

B. Penetration Identification: Identify each penetration firestopping system with legible metal or plastic labels. Attach labels permanently to surfaces adjacent to and within 6 inches of penetration firestopping system edge so labels are visible to anyone seeking to remove penetrating items or firestopping systems. Use mechanical fasteners or self-adhering-type labels with adhesives capable of permanently bonding labels to surfaces on which labels are placed. Include the following information on labels:

1. The words "Warning - Penetration Firestopping - Do Not Disturb.

Notify Building Management of Any Damage."

2. Contractor's name, address, and phone number.
3. Designation of applicable testing and inspecting agency.
4. Date of installation.
5. Manufacturer's name.
6. Installer's name.

3.5 FIELD QUALITY CONTROL

A. Where deficiencies are found or penetration firestopping system is damaged or removed because of testing, repair or replace penetration firestopping system to comply with requirements.

B. Proceed with enclosing penetration firestopping systems with other construction only after inspection reports are issued and installations comply with requirements.

3.6 CLEANING AND PROTECTING

A. Clean off excess fill materials adjacent to openings as Work progresses by methods and with cleaning materials that are approved in writing by through-penetration firestop system manufacturers and that do not damage materials in which openings occur.

B. Provide final protection and maintain conditions during and after installation that ensure that through-penetration firestop systems are without damage or deterioration at time of Substantial Completion. If, despite such protection, damage or deterioration occurs, cut out and remove damaged or deteriorated through-penetration firestop systems immediately and install new materials to produce systems complying with specified requirements.

END OF SECTION 07 84 13

SECTION 27 05 26
GROUNDING AND BONDING FOR COMMUNICATION SYSTEMS
PART 1 - GENERAL

1.01 RELATED DOCUMENTS

Drawings and general provisions of the Contract, including General a
Conditions.

1.02 SUMMARY

A. Section Includes:

1. Grounding conductors.
2. Grounding connectors.
3. Grounding busbars.
4. Grounding labeling.

1.03 DEFINITIONS

A. BCT: Bonding conductor for telecommunications.

B. EMT: Electrical metallic tubing.

C. TGB: Telecommunications grounding busbar.

D. TMGB: Telecommunications main grounding busbar.

1.04 ACTION SUBMITTALS

A. Product Data: For each type of product.

B. Shop Drawings: For communications equipment room signal reference grid. Include plans,
elevations, sections, details, and attachments to other work.

A. **PART 2 - PRODUCTS**

2.01 SYSTEM COMPONENTS

A. Comply with J-STD-607-A.

2.02 CONDUCTORS

A. Comply with UL 486A-486B.

B. Insulated Conductors: Stranded copper wire, green or green with yellow stripe insulation, insulated for 600 V, and complying with UL 83.

1. Ground wire for custom-length equipment ground jumpers shall be No. 6 AWG, 19- strand, UL-listed, Type THHN wire.

2. Cable Tray Equipment Grounding Wire: No. 8 AWG.

C. Cable Tray Grounding Jumper:

1. Not smaller than No. 10 AWG and not longer than 12 inches. If jumper is a wire, it shall have a crimped grounding lug with one hole and standard barrel for one crimp. If jumper is a flexible braid, it shall have a one- or two-hole ferrule. Attach with grounding screw or connector provided by cable tray manufacturer.

D. Bare Copper Conductors:

1. Solid Conductors: ASTM B 3.

2. Stranded Conductors: ASTM B 8.

3. Tinned Conductors: ASTM B 33.

4. Bonding Cable: 14 strands of No. 17 AWG conductor, and 1/4 inch in diameter.

5. Bonding Conductor: No. 4 or No. 6 AWG, stranded conductor.

6. Bonding Jumper: Tinned-copper tape, braided conductors terminated with two-hole copper ferrules; 1-5/8 inches wide and 1/16 inch thick.

2.03 CONNECTORS

A. Irreversible connectors listed for the purpose. Listed by an NRTL as complying with NFPA 70 for specific types, sizes, and combinations of conductors and other items connected. Comply with UL 486A-486B.

B. Compression Wire Connectors: Crimp-and-compress connectors that bond to the conductor when the connector is compressed around the conductor. Comply with UL 467.

1. Electroplated tinned copper, C and H shaped.

C. Signal Reference Grid Connectors: Combination of compression wire connectors, access floor grounding clamps, bronze U-bolt grounding clamps, and copper split-bolt connectors, designed for the purpose.

D. Busbar Connectors: Cast silicon bronze, solderless compression-type, mechanical connector; with a long barrel and two holes spaced on 5/8- or 1-inch centers for a two-bolt connection to the busbar.

2.04 GROUNDING BUSBARS

A. TMGB: Predrilled, wall-mounted, rectangular bars of hard-drawn solid copper, 1/4 by 4 inches in cross section, length as indicated on Drawings. The busbar shall be NRTL listed for use as TMGB and shall comply with J-STD-607-A.

1. Predrilling shall be with holes for use with lugs specified in this Section.
2. Mounting Hardware: Stand-off brackets that provide a 4-inch
3. Stand-off insulators for mounting shall be Lexan or PVC. Comply with UL 891 for use in 600-V switchboards, impulse tested at 5000 V.

2.05 LABELING

A. Comply with TIA/EIA-606-A and UL 969 for a system of labeling materials, including label stocks, laminating adhesives, and inks used by label printers.

B. Adhesive Film Label with Clear Protective Overlay: Machine printed, in black, by thermal transfer or equivalent process. Minimum letter height shall be 3/8 inch. Overlay shall provide a weatherproof and UV-resistant seal for label.

B. PART 3 - EXECUTION

3.01 EXAMINATION

A. Examine the ac grounding electrode system and equipment grounding for compliance with requirements for maximum ground-resistance level and other conditions affecting performance of grounding and bonding of the electrical system.

B. Inspect the test results of the ac grounding system measured at the point of BCT connection.

C. Proceed with connection of the BCT only after unsatisfactory conditions have been corrected.

3.02 INSTALLATION

A. Bonding shall include the ac utility power service entrance, the communications cable entrance, and the grounding electrode system. The bonding of these elements shall form a loop so that each element is connected to at least two others.

B. Comply with NECA 1.

C. Comply with J-STD-607-A.

3.03 APPLICATION

A. Conductors: Install solid conductor for No. 8 AWG and smaller and stranded conductors for No. 6 AWG and larger unless otherwise indicated.

1. The bonding conductors between the TGB and structural steel of steel-frame buildings shall not be smaller than No. 6 AWG.

B. Conductor Terminations and Connections:

1. Pipe and Equipment Grounding Conductor Terminations: Bolted connectors.

2. Underground Connections: Welded connectors except at test wells and as otherwise indicated.

3. Connections to Structural Steel: Welded connectors.

C. Conductor Support:

1. Secure grounding and bonding conductors at intervals of not less than 36 inches

D. Grounding and Bonding Conductors:

1. Install in the straightest and shortest route between the origination and termination point, and no longer than required. The bend radius shall not be smaller than eight times the diameter of the conductor. No one bend may exceed 90 degrees.

2. Install without splices.

3. Support at not more than 36-inch intervals.

4. Install grounding and bonding conductors in 3/4-inch PVC conduit until conduit enters a telecommunications room. The grounding and bonding conductor pathway through a plenum shall be in EMT. Conductors shall not be installed in EMT unless otherwise indicated.

a. If a grounding and bonding conductor is installed in ferrous metallic conduit, bond the conductor to the conduit using a grounding bushing that complies with requirements in Section 270528 "Pathways for Communications Systems," and bond both ends of the conduit to a TGB.

3.04 GROUNDING BUSBARS

A. Indicate locations of grounding busbars on Drawings. Install busbars

horizontally, on insulated spacers 2 inches minimum from wall, 12 inches above finished floor unless otherwise indicated.

B. Where indicated on both sides of doorways, route bus up to top of door frame, across top of doorway, and down; connect to horizontal bus.

3.05 CONNECTIONS

A. Bond metallic equipment in a telecommunications equipment room to the grounding busbar in that room, using equipment grounding conductors not smaller than No. 6 AWG.

B. Stacking of conductors under a single bolt is not permitted when connecting to busbars.

C. Assemble the wire connector to the conductor, complying with manufacturer's written instructions and as follows:

1. Use crimping tool and the die specific to the connector.

2. Pre-twist the conductor.

3. Apply an antioxidant compound to all bolted and compression connections.

D. Telecommunications Enclosures and Equipment Racks: Bond metallic components of enclosures to the telecommunications bonding and grounding system.. Bond the equipment grounding busbar to the TGB No. 2 AWG bonding conductors.

E. Structural Steel: Where the structural steel of a steel frame building is readily accessible within the room or space, bond each TGB and TMGB to the vertical steel of the building frame.

F. Shielded Cable: Bond the shield of shielded cable to the TGB in communications rooms and spaces. Comply with TIA/EIA-568-B.1 and TIA/EIA-568-B.2 when grounding screened, balanced, twisted-pair cables.

G. Rack- and Cabinet-Mounted Equipment: Bond powered equipment chassis to the cabinet or rack grounding bar. Power connection shall comply with NFPA 70; the equipment grounding conductor in the power cord of cord- and plug-connected equipment shall be considered as a supplement to bonding requirements in this Section.

3.06 IDENTIFICATION

A. Labels shall be preprinted or computer-printed type.

1. Label TGB(s) with "fs-TGB," where "fs" is the telecommunications space identifier for the space containing the TGB.

2. Label the BCT and each telecommunications backbone conductor at its attachment point: "WARNING! TELECOMMUNICATIONS BONDING CONDUCTOR. DO NOT REMOVE OR DISCONNECT!"

3.07 FIELD QUALITY CONTROL

A. Perform tests and inspections.

B. Tests and Inspections:

1. Inspect physical and mechanical condition. Verify tightness of accessible, bolted, electrical connections with a calibrated torque wrench according to manufacturer's written instructions.

END OF SECTION

SECTION 27 05 36

CABLE TRAYS FOR COMMUNICATION SYSTEMS

PART 1 - GENERAL

1.01 RELATED DOCUMENTS

A. Drawings and general provisions of the Contract, including General and Supplementary Conditions and Division 01 Specification Sections, apply to this Section.

1.02 SUMMARY

A. Section Includes:

1. Wire-basket cable trays.

B. Related Requirements:

1.03 ACTION SUBMITTALS

A. Product Data: For each type of cable tray.

1. Include data indicating dimensions and finishes for each type of cable tray indicated.

PART 2 - PRODUCTS

2.01 GENERAL REQUIREMENTS FOR CABLE TRAYS

A. Cable Trays and Accessories: Identified as defined in NFPA 70 and marked for intended location, application, and grounding.

1. Source Limitations: Obtain cable trays and components from single manufacturer.

B. Structural Performance: See articles for individual cable tray types for specific values for the following parameters:

1. Uniform Load Distribution: Capable of supporting a uniformly distributed load on the indicated support span when supported as a simple span and tested according to NEMA VE 1.

2. Concentrated Load: A load applied at midpoint of span and centerline of tray.

3. Load and Safety Factors: Applicable to both side rails and rung capacities.

2.02 WIRE-BASKET CABLE TRAYS

A. Description:

1. Configuration: Wires are formed into a standard 2-by-4-inch wire mesh pattern with intersecting wires welded together. Mesh sections must have at least one bottom longitudinal wire along entire length of section.

2. Materials: High-strength-steel longitudinal wires with no bends.

3. Safety Provisions: Wire ends along wire-basket sides (flanges) rounded during manufacturing to maintain integrity of cables and installer safety.

4. Sizes:

a. Straight sections shall be furnished in standard 118-inch lengths.

b. Wire-Basket Depth: 2-inch usable loading depth by 6 inches or 12 inches wide.

5. Connector Assemblies: Bolt welded to plate shaped to fit around adjoining tray wires and mating plate. Mechanically joins adjacent tray wires to splice sections together or to create horizontal fittings.

6. Connector Assembly Capacity: Splices located within support span shall not diminish rated loading capacity of cable tray.

7. Hardware and Fasteners: ASTM F 593 and ASTM F 594 stainless steel, Type 316.

2.03 CABLE TRAY ACCESSORIES

A. Fittings: Tees, crosses, risers, elbows, and other fittings as indicated, of same materials and finishes as cable tray.

B. Cable tray supports and connectors, including bonding jumpers, as recommended by cable tray manufacturer.

PART 3 - EXECUTION

3.01 CABLE TRAY INSTALLATION

A. Install cable trays according to NEMA VE 2.

B. Install cable trays as a complete system, including fasteners, hold-down clips, support systems, barrier strips, adjustable horizontal and vertical splice plates, elbows, reducers, tees, crosses, cable dropouts, adapters, covers, and bonding.

C. Install cable trays so that the tray is accessible for cable installation and all splices are accessible for inspection and adjustment.

D. Remove burrs and sharp edges from cable trays.

E. Join aluminum cable tray with splice plates; use four square neck-carriage bolts and locknuts.

F. Fasten cable tray supports to building structure.

G. Place supports so that spans do not exceed maximum spans on schedules and provide clearances shown on Drawings. Install intermediate supports when cable weight exceeds the load-carrying capacity of the tray rungs.

H. Construct supports from channel members, threaded rods, and other appurtenances furnished by cable tray manufacturer. Arrange supports in trapeze or wall-bracket form as required by application.

I. Support bus assembly to prevent twisting from eccentric loading.

J. Locate and install supports according to NEMA VE 2. Do not install more than one cable tray splice between supports.

K. Support wire-basket cable trays with trapeze hangers.

L. Support trapeze hangers for wire-basket trays with 1/4-inch diameter rods.

M. Make changes in direction and elevation using manufacturer's recommended fittings.

N. Make cable tray connections using manufacturer's recommended fittings.

O. Seal penetrations through fire and smoke barriers. Comply with requirements in Section 078413 "Penetration Firestopping."

P. Install cable trays with enough workspace to permit access for installing cables.

3.02 CABLE TRAY GROUNDING

A. Ground cable trays according to NFPA 70 unless additional grounding is specified. Comply with requirements in Section 270526 "Grounding and Bonding for Communications Systems."

B. Cable trays with communications cable shall be bonded together with splice plates listed for grounding purposes or with listed bonding jumpers.

C. Cable trays with control conductors shall be bonded together with splice plates listed for grounding purposes or with listed bonding jumpers.

3.03 CABLE INSTALLATION

A. Install cables only when each cable tray run has been completed and inspected.

END OF SECTION

SECTION 27 15 00
COMMUNICATIONS HORIZONTAL CABLING

1.01 RELATED DOCUMENTS

A. Drawings and general provisions of the Contract, including General and Supplementary Conditions and Division 01 Specification Sections, apply to this Section.

1.02 SUMMARY

A. Section Includes:

1. UTP cabling.
2. 50/125-micrometer, optical fiber cabling.
3. Coaxial cable.
4. Multiuser telecommunications outlet assemblies.
5. Cable connecting hardware, patch panels, and cross-connects.
6. Telecommunications outlet/connectors.
7. Cabling system identification products.

1.03 DEFINITIONS

A. BICSI: Building Industry Consulting Service International.

B. Consolidation Point: A location for interconnection between horizontal cables extending from building pathways and horizontal cables extending into furniture pathways.

C. Cross-Connect: A facility enabling the termination of cable elements and their interconnection or cross-connection.

D. EMI: Electromagnetic interference.

E. IDC: Insulation displacement connector.

F. LAN: Local area network.

G. MUTOA: Multiuser telecommunications outlet assembly, a grouping in one location of several telecommunications outlet/connectors.

H. Outlet/Connectors: A connecting device in the work area on which horizontal cable or outlet cable terminates.

I. RCDD: Registered Communications Distribution Designer.

J. UTP: Unshielded twisted pair.

1.04 ADMINISTRATIVE REQUIREMENTS

A. Coordinate layout and installation of telecommunications cabling with City's telecommunications and LAN equipment and service suppliers.

B. Coordinate telecommunications outlet/connector locations with location of power receptacles at each work area.

1.05 ACTION SUBMITTALS

A. Product Data: For each type of product.

1. For coaxial cable, include the following installation data for each type used:

a. Nominal OD.

b. Minimum bending radius.

c. Maximum pulling tension.

1.06 DELIVERY, STORAGE, AND HANDLING

A. Test cables upon receipt at Project site.

1. Test each pair of UTP cable for open and short circuits.

PART 2 - PRODUCTS

2.01 HORIZONTAL CABLING DESCRIPTION

A. Horizontal cable and its connecting hardware provide the means of transporting signals between the telecommunications outlet/connector and the horizontal cross-connect located in the communications equipment room. This cabling and its connecting hardware are called a "permanent link," a term that is used in the testing protocols.

1. Horizontal cabling shall contain no more than one transition point or consolidation point between the horizontal cross-connect and the telecommunications outlet/connector.
2. Bridged taps and splices shall not be installed in the horizontal cabling.
3. Splitters shall not be installed as part of the optical fiber cabling.

B. The maximum allowable horizontal cable length is 295 feet. This maximum allowable length does not include an allowance for the length of 16 feet to the workstation equipment or in the horizontal cross-connect.

2.02 PERFORMANCE REQUIREMENTS

A. General Performance: Horizontal cabling system shall comply with transmission standards in TIA/EIA-568-B.1 when tested according to test procedures of this standard.

B. Surface-Burning Characteristics: Comply with ASTM E 84; testing by a qualified testing agency. Identify products with appropriate markings of applicable testing agency.

1. Flame-Spread Index: 25 or less.

2. Smoke-Developed Index: 50 or less.

C. Electrical Components, Devices, and Accessories: Listed and labeled as defined in NFPA 70, by a qualified testing agency, and marked for intended location and application.

D. Grounding: Comply with J-STD-607-A.

2.03 BACKBOARDS

A. *Backboards:* Plywood, fire-retardant treated, 3/4 inches as indicated on drawings.

2.04 UTP CABLE

A. Description: 100-ohm, four-pair UTP, formed into 25-pair, binder groups covered with a blue thermoplastic jacket.

1. Comply with ICEA S-90-661 for mechanical properties.

2. Comply with TIA/EIA-568-B.1 for performance specifications.

3. Comply with TIA/EIA-568-B.2, Category 5E and Category 6E.

4. Listed and labeled by an NRTL acceptable to authorities having jurisdiction as complying with UL 444 and NFPA 70 for the following types:

a. Communications, General Purpose: Type CM or CMG.

b. Communications, Plenum Rated: Type CMP, complying with NFPA 262.

c. Communications, Riser Rated: Type CMR, complying with UL 1666.

d. Communications, Limited Purpose: Type CMX.

e. Multipurpose: Type MP or MPG.

f. Multipurpose, Plenum Rated: Type MPP, complying with NFPA 262.

g. Multipurpose, Riser Rated: Type MPR, complying with UL 1666.

2.05 UTP CABLE HARDWARE

A. General Requirements for Cable Connecting Hardware: Comply with TIA/EIA-568-B.2, IDC type, with modules designed for punch-down caps or tools. Cables shall be terminated with connecting hardware of same category or higher.

B. Connecting Blocks: 110-style. Provide blocks for the number of cables terminated on the block, plus 25 percent spare. Integral with connector bodies, including plugs and jacks where indicated.

C. Cross-Connect: Modular array of connecting blocks arranged to terminate building cables and permit interconnection between cables.

1. Number of Terminals per Field: One for each conductor in assigned cables.

D. Patch Panel: Modular panels housing multiple-numbered jack units with IDC-type connectors at each jack for permanent termination of pair groups of installed cables.

1. Number of Jacks per Field: One for each four-pair UTP cable indicated.

E. Jacks and Jack Assemblies: Modular, color-coded, eight-position modular receptacle units with integral IDC-type terminals.

F. Patch Cords: Factory-made, four-pair cables in 36-inch lengths; terminated with eight-position modular plug at each end.

1. Patch cords shall have bend-relief-compliant boots and color-coded icons to ensure Category 6E performance. Patch cords shall have latch guards to protect against snagging.

2.06 COAXIAL CABLE

A. Cable Characteristics: Broadband type, recommended by cable manufacturer specifically for broadband data transmission applications. Coaxial cable and accessories shall have 75-ohm nominal impedance with a return loss of 20 dB maximum from 7 to 806 MHz.

B. RG-11/U: NFPA 70, Type CATV.

1. No. 14 AWG, solid, copper-covered steel conductor.

2. Gas-injected, foam-PE insulation.

3. Double shielded with 100 percent aluminum polyester tape and 60 percent aluminum braid.
4. Jacketed with sunlight-resistant, black PVC or PE.

5. Suitable for outdoor installations in ambient temperatures ranging from minus 40 to plus 85 deg C.

C. RG59/U: NFPA 70, Type CATVR.

1. No. 20 AWG, solid, silver-plated, copper-covered steel conductor.

2. Gas-injected, foam-PE insulation.

3. Triple shielded with 100 percent aluminum polyester tape and 95 percent aluminum braid; covered by aluminum foil with grounding strip.
4. Color-coded PVC jacket.

D. RG-6/U: NFPA 70, Type CATV or CM.

1. No. 16 AWG, solid, copper-covered steel conductor; gas-injected, foam-PE insulation.

2. Double shielded with 100 percent aluminum-foil shield and 60 percent aluminum braid.

3. Jacketed with black PVC or PE.

4. Suitable for indoor installations.

E. RG59/U: NFPA 70, Type CATV.

1. No. 20 AWG, solid, copper-covered steel conductor; gas-injected, foam-PE insulation.

2. Double shielded with 100 percent aluminum polyester tape and 40 percent aluminum braid.
3. PVC jacket.

F. RG59/U (Plenum Rated): NFPA 70, Type CMP.

1. No. 20 AWG, solid, copper-covered steel conductor; foam fluorinated ethylene propylene insulation.
2. Double shielded with 100 percent aluminum-foil shield and 65 percent aluminum braid.

3. Copolymer jacket.

G. NFPA and UL compliance, listed and labeled by an NRTL acceptable to authorities having jurisdiction as complying with UL 1655 and with NFPA 70 "Radio and Television Equipment" and "Community Antenna Television and Radio Distribution" Articles. Types are as follows:
1. CATV Cable: Type CATV.

2. CATV Plenum Rated: Type CATVP, complying with NFPA 262.

3. CATV Riser Rated: Type CATVR, complying with UL 1666.

4. CATV Limited Rating: Type CATVX.

2.07 COAXIAL CABLE HARDWARE

A. Coaxial-Cable Connectors: Type BNC, 75 ohms.

2.08 CONSOLIDATION POINTS

A. Description: Consolidation points shall comply with requirements for cable connecting hardware.

1. Number of Terminals per Field: One for each conductor in assigned cables.

2. Number of Connectors per Field:

a. One for each four-pair UTP cable indicated.

b. One for each four-pair conductor group of indicated cables, plus 25 percent spare positions.

3. Mounting: Recessed in ceiling.

4. NRTL listed as complying with UL 50 and UL 1863.

5. When installed in plenums used for environmental air, NRTL listed as complying with UL 2043.

2.09 MULTIUSER TELECOMMUNICATIONS OUTLET ASSEMBLY (MUTOA)

A. Description: MUTOAs shall meet the requirements for cable connecting hardware.

1. Number of Terminals per Field: One for each conductor in assigned cables.

2. Number of Connectors per Field:

a. One for each four-pair UTP cable indicated.

b. One for each four-pair conductor group of indicated cables, plus 25 percent spare positions.

3. Mounting: Wall/.

4. NRTL listed as complying with UL 50 and UL 1863.

5. Label shall include maximum length of work area cords, based on TIA/EIA-568-B.1.

6. When installed in plenums used for environmental air, NRTL listed as complying with UL 2043.

2.10 TELECOMMUNICATIONS OUTLET/CONNECTORS

A. Jacks: 100-ohm, balanced, twisted-pair connector; four-pair, eight-position modular. Comply with TIA/EIA-568-B.1.

B. Workstation Outlets: Two-port-connector assemblies mounted in single faceplate.

1. Plastic Faceplate: High-impact plastic. Coordinate color with Section 262726 "Wiring Devices."

2. Metal Faceplate: Stainless steel, complying with requirements in Section 262726 "Wiring Devices."

3. For use with snap-in jacks accommodating any combination of UTP, optical fiber, and coaxial work area cords.
a. Flush mounting jacks, positioning the cord at a 45-degree angle.

4. Legend: Factory labeled by silk-screening or engraving for stainless steel.

5. Legend: Machine printed, in the field, using adhesive-tape label.

6. Legend: Snap-in, clear-label covers and machine-printed paper inserts.

2.11 GROUNDING

A. Comply with requirements in Section 270526 "Grounding and Bonding for Communications Systems" for grounding conductors and connectors.

B. Comply with J-STD-607-A.

2.12 IDENTIFICATION PRODUCTS

A. Comply with TIA/EIA-606-A and UL 969 for labeling materials, including label stocks, laminating adhesives, and inks used by label printers.
B. Comply with requirements in Section 260553 "Identification for Electrical Systems."

PART 3 - EXECUTION

3.01 WIRING METHODS

A. Install cables in pathways and cable trays except within consoles, cabinets, desks, and counters and except in accessible ceiling spaces and in gypsum board partitions where unenclosed wiring method may be used. Conceal pathways and cables except in unfinished spaces.
1. Install plenum cable in environmental air spaces, including plenum ceilings.

2. Comply with requirements in Section 270528 "Pathways for Communications Systems."

3. Comply with requirements in Section 270536 "Cable Trays for Communications Systems."
B. Conceal conductors and cables in accessible ceilings, walls, and floors where possible.

C. Wiring within Enclosures:

1. Bundle, lace, and train conductors to terminal points with no excess and without exceeding manufacturer's limitations on bending radii.
2. Install lacing bars and distribution spools.

3. Install conductors parallel with or at right angles to sides and back of enclosure.

3.02 INSTALLATION OF CABLES

A. Comply with NECA 1.

B. General Requirements for Cabling:

1. Comply with TIA/EIA-568-B.1.

2. Comply with BICSI ITSIM, Ch. 6, "Cable Termination Practices."

3. Install 110-style IDC termination hardware unless otherwise indicated.

4. MUTOA shall not be used as a cross-connect point.

5. Consolidation points may be used only for making a direct connection to telecommunications outlet/connectors:

a. Do not use consolidation point as a cross-connect point, as a patch connection, or for direct connection to workstation equipment.
b. Locate consolidation points for UTP at least 49 feet from communications equipment room.
6. Terminate conductors; no cable shall contain unterminated elements. Make terminations only at indicated outlets, terminals, cross-connects, and patch panels.
7. Cables may not be spliced. Secure and support cables at intervals not exceeding 30 inches and not more than 6 inches from cabinets, boxes, fittings, outlets, racks, frames, and terminals.
8. Install lacing bars to restrain cables, to prevent straining connections, and to prevent bending cables to smaller radii than minimums recommended by manufacturer.
9. Bundle, lace, and train conductors to terminal points without exceeding manufacturer's limitations on bending radii, but not less than radii specified in BICSI ITSIM, "Cabling Termination Practices" Chapter. Install lacing bars and distribution spools.
10. Do not install bruised, kinked, scored, deformed, or abraded cable. Do not splice cable between termination, tap, or junction points. Remove and discard cable if damaged during installation and replace it with new cable.
11. Cold-Weather Installation: Bring cable to room temperature before dereeling. Heat lamps shall not be used for heating.
12. In the communications equipment room, install a 10-foot- long service loop on each end of cable.
13. Pulling Cable: Comply with BICSI ITSIM, Ch. 4, "Pulling Cable." Monitor cable pull tensions.

C. UTP Cable Installation:

1. Comply with TIA/EIA-568-B.2.

2. Do not untwist UTP cables more than 1/2 inch from the point of termination to maintain cable geometry.

D. Open-Cable Installation:

1. Install cabling with horizontal and vertical cable guides in telecommunications spaces with terminating hardware and interconnection equipment.
2. Suspend UTP cable not in a wireway or pathway a minimum of 8 inches above ceilings by cable supports not more than 60 inches apart.
3. Cable shall not be run through structural members or in contact with pipes, ducts, or other potentially damaging items.

E. Outdoor Coaxial Cable Installation:

1. Install outdoor connections in enclosures complying with NEMA 250, Type 4X. Install corrosion-resistant connectors with properly designed O-rings to keep out moisture.
2. Attach antenna lead-in cable to support structure at intervals not exceeding 36 inches.

F. Group connecting hardware for cables into separate logical fields.

3.03 FIRESTOPPING

A. Comply with requirements in Section 078413 "Penetration Firestopping."

B. Comply with TIA-569-B, Annex A, "Firestopping."

C. Comply with BICSI TDMM, "Firestopping Systems" Article.

3.04 GROUNDING

A. Install grounding according to BICSI TDMM, "Grounding, Bonding, and Electrical Protection" Chapter.
B. Comply with J-STD-607-A.

C. Locate grounding bus bar to minimize the length of bonding conductors. Fasten to wall allowing at least 2-inch clearance behind the grounding bus bar. Connect grounding bus bar with a minimum No. 4 AWG grounding electrode conductor from grounding bus bar to suitable electrical building ground.
D. Bond metallic equipment to the grounding bus bar, using not smaller than No. 6 AWG equipment grounding conductor.

3.05 IDENTIFICATION

A. Identify system components, wiring, and cabling complying with TIA/EIA-606-A. Comply with requirements for identification specified in Section 260553 "Identification for Electrical Systems."
B. Using cable management system software specified in Part 2, develop Cabling Administration Drawings for system identification, testing, and management. Use unique, alphanumeric designation for each cable and label cable, jacks, connectors, and terminals

to which it connects with same designation. At completion, cable and asset management software shall reflect as-built conditions.

C. Comply with requirements in Section 099123 "Interior Painting" for painting backboards. For fire-resistant plywood, do not paint over manufacturer's label.

D. Cable Schedule: Post in prominent location in each equipment room and wiring closet. List incoming and outgoing cables and their designations, origins, and destinations. Protect with rigid frame and clear plastic cover. Furnish an electronic copy of final comprehensive schedules for Project.

E. Cable and Wire Identification:

1. Label each cable within 4 inches of each termination and tap, where it is accessible in a cabinet or junction or outlet box, and elsewhere as indicated.

2. Each wire connected to building-mounted devices is not required to be numbered at device if color of wire is consistent with associated wire connected and numbered within panel or cabinet.

3. Exposed Cables and Cables in Cable Trays and Wire Troughs: Label each cable at intervals not exceeding 15 feet.

4. Label each terminal strip and screw terminal in each cabinet, rack, or panel.

a. Individually number wiring conductors connected to terminal strips, and identify each cable or wiring group being extended from a panel or cabinet to a building- mounted device shall be identified with name and number of particular device as shown.

b. Label each unit and field within distribution racks and frames.

5. Identification within Connector Fields in Equipment Rooms and Wiring Closets: Label each connector and each discrete unit of cable-terminating and connecting hardware. Where similar jacks and plugs are used for both voice and data communication cabling, use a different color for jacks and plugs of each service.

6. Uniquely identify and label work area cables extending from the MUTOA to the work area. These cables may not exceed the length stated on the MUTOA label.

F. Labels shall be preprinted or computer-printed type with printing area and font color that contrasts with cable jacket color but still complies with requirements in TIA/EIA-606-A.

1. Cables use flexible vinyl or polyester that flex as cables are bent.

END OF SECTION

Section 270528

PATHWAYS FOR COMMUNICATION SYSTEMS

1.01 RELATED DOCUMENTS

A. Drawings and general provisions of the Contract, including General and Supplementary Conditions and Division 01 Specification Sections, apply to this Section.

1.02 SUMMARY

A. Section Includes:

1. Metal conduits and fittings.
2. Nonmetallic conduits and fittings.
3. Optical-fiber-cable pathways and fittings.
4. Metal wireways and auxiliary gutters.
5. Nonmetallic wireways and auxiliary gutters.
6. Surface pathways.
7. Boxes, enclosures, and cabinets.
8. Handholes and boxes for exterior underground cabling.

B. Related Requirements:

1. Section 260533 "Raceways and Boxes for Electrical Systems" for conduits, wireways, surface raceways, boxes, enclosures, cabinets, handholes, and faceplate adapters serving electrical systems.

1.03 DEFINITIONS

A. ARC: Aluminum rigid conduit.

B. GRC: Galvanized rigid steel conduit.

C. IMC: Intermediate metal conduit.

1.04 ACTION SUBMITTALS

A. Product Data: For surface pathways, wireways and fittings, floor boxes, hinged-cover enclosures, and cabinets.

A. PART 2 - PRODUCTS

2.01 METAL CONDUITS AND FITTINGS

A. General Requirements for Metal Conduits and Fittings:

1. Listed and labeled as defined in NFPA 70, by a qualified testing agency, and marked for intended location and application.

2. Comply with TIA-569-B.

B. GRC: Comply with ANSI C80.1 and UL 6.

C. IMC: Comply with ANSI C80.6 and UL 1242.

D. EMT: Comply with ANSI C80.3 and UL 797.

E. Fittings for Metal Conduit: Comply with NEMA FB 1 and UL 514B.

1. Fittings for EMT:

a. Material: Steel or die cast.

b. Type: Setscrew or compression.

2. Expansion Fittings: PVC or steel to match conduit type, complying with UL-467, rated for environmental conditions where installed, and including flexible external bonding jumper.

F. Joint Compound for IMC, GRC, or ARC: Approved, as defined in NFPA 70, by authorities having jurisdiction for use in conduit assemblies, and compounded for use to lubricate and protect threaded conduit joints from corrosion and to enhance their conductivity.

2.02 NONMETALLIC CONDUITS AND FITTINGS

A. General Requirements for Nonmetallic Conduits and Fittings:

1. Listed and labeled as defined in NFPA 70, by a qualified testing agency, and marked for intended location and application.

2. Comply with TIA-569-B.

B. RNC: Type EPC-40-PVC, complying with NEMA TC 2 and UL 651 unless otherwise indicated.

C. Fittings for RNC: Comply with NEMA TC 3; match to conduit or tubing type and material.

2.03 BOXES, ENCLOSURES, AND CABINETS

A. General Requirements for Boxes, Enclosures, and Cabinets:

1. Comply with TIA-569-B.

2. Boxes, enclosures and cabinets installed in wet locations shall be listed for use in wet locations.

B. Sheet-Metal Outlet and Device Boxes: Comply with NEMA OS 1 and UL 514A.

C. Box extensions used to accommodate new building finishes shall be of same material as recessed box.

D. Metal Floor Boxes:

1. Shape: Rectangular.

2. Listing and Labeling: Metal floor boxes shall be listed and labeled as defined in NFPA 70, by a qualified testing agency, and marked for intended location and application.

E. Small Sheet Metal Pull and Junction Boxes: NEMA OS 1.

F. Device Box Dimensions: 4 inches square by 2-1/8 inches deep.

G. Gangable boxes are allowed.

B. **PART 3 - EXECUTION**

3.01 PATHWAY APPLICATION

A. Outdoors: Apply pathway products as specified below unless otherwise indicated:

1. Exposed Conduit: GRC.

2. Concealed Conduit, Aboveground: IMC.

3. Underground Conduit: RNC, Type EPC-40-PVC.

4. Boxes and Enclosures, Aboveground: NEMA 250, Type 4.

B. Indoors: Apply pathway products as specified below unless otherwise indicated:

1. Exposed, Not Subject to Physical Damage: EMT.

2. Exposed, Not Subject to Severe Physical Damage: EMT.

3. Exposed and Subject to Severe Physical Damage: IMC. Pathway locations include the following:

a. Loading dock.

b. Corridors used for traffic of mechanized carts, forklifts, and pallet-handling units.

c. Mechanical rooms.

d. Gymnasiums

4. Concealed in Ceilings and Interior Walls and Partitions: EMT.

5. Damp or Wet Locations: GRC.

C. Minimum Pathway Size: 1-inch trade size. Minimum size for optical-fiber cables is 1 inch.

D. Pathway Fittings: Compatible with pathways and suitable for use and location.

1. Rigid and Intermediate Steel Conduit: Use threaded rigid steel conduit fittings unless otherwise indicated. Comply with NEMA FB 2.10.

2. PVC Externally Coated, Rigid Steel Conduits: Use only fittings listed for use with this type of conduit. Patch and seal all joints, nicks, and scrapes in PVC coating after installing

conduits and fittings. Use sealant recommended by fitting manufacturer and apply in thickness and number of coats recommended by manufacturer.

3. EMT: Use setscrew or compression, fittings. Comply with NEMA FB 2.10.

E. Do not install aluminum conduits, boxes, or fittings in contact with concrete or earth.

3.02 INSTALLATION

A. Comply with NECA 1, NECA 101, and TIA-569-B for installation requirements except where requirements on Drawings or in this article are stricter. Comply with NECA 102 for aluminum pathways. Comply with NFPA 70 limitations for types of pathways allowed in specific occupancies and number of floors.

B. Keep pathways at least 6 inches away from parallel runs of flues and steam or hot-water pipes. Install horizontal pathway runs above water and steam piping.

C. Complete pathway installation before starting conductor installation.

D. Comply with requirements in Section 260529 "Hangers and Supports for Electrical Systems" for hangers and supports.

E. Arrange stub-ups so curved portions of bends are not visible above finished slab.

F. Install no more than the equivalent of two 90-degree bends in any pathway run. Support within 12 inches of changes in direction. Utilize long radius ells for all optical-fiber cables.

G. Conceal conduit and EMT within finished walls, ceilings, and floors unless otherwise indicated. Install conduits parallel or perpendicular to building lines.

H. Support conduit within 12 inches of enclosures to which attached.

I. Stub-ups to Above Recessed Ceilings:

1. Use EMT, IMC, or RMC for pathways.

2. Use a conduit bushing or insulated fitting to terminate stub-ups not terminated in hubs or in an enclosure.

J. Terminate threaded conduits into threaded hubs or with locknuts on inside and outside of boxes or cabinets. Install insulated bushings on conduits terminated with locknuts.

K. Install pathways square to the enclosure and terminate at enclosures with locknuts. Install locknuts hand tight plus 1/4 turn more.

L. Do not rely on locknuts to penetrate nonconductive coatings on enclosures. Remove coatings in the locknut area prior to assembling conduit to enclosure to assure a continuous ground path.

M. Cut conduit perpendicular to the length. For conduits of 2-inch trade size and larger, use roll cutter or a guide to ensure cut is straight and perpendicular to the length.

N. Install pull wires in empty pathways. Use polypropylene or monofilament plastic line with not less than 200-lbtensile strength. Leave at least 12 inches of slack at each end of pull wire. Cap underground pathways designated as spare above grade alongside pathways in use.

O. Install pathway sealing fittings at accessible locations according to NFPA 70 and fill them with listed sealing compound. For concealed pathways, install each fitting in a flush steel box with a blank cover plate having a finish similar to that of adjacent plates or surfaces. Install pathway sealing fittings according to NFPA 70.

P. Mount boxes at heights indicated on Drawings. If mounting heights of boxes are not individually indicated, give priority to ADA requirements. Install boxes with height measured to center of box unless otherwise indicated.

Q. Recessed Boxes in Masonry Walls: Saw-cut opening for box in center of cell of masonry block, and install box flush with surface of wall. Prepare block surface to provide a flat surface for a raintight connection between box and cover plate or supported equipment and box.

R. Horizontally separate boxes mounted on opposite sides of walls so they are not in the same vertical channel.

S. Support boxes of three gangs or more from more than one side by spanning two framing members or mounting on brackets specifically designed for the purpose.

T. Fasten junction and pull boxes to or support from building structure. Do not support boxes by conduits.

U. Set metal floor boxes level and flush with finished floor surface.

V. Set nonmetallic floor boxes level. Trim after installation to fit flush with finished floor surface.

3.03 INSTALLATION OF UNDERGROUND CONDUIT

A. Direct-Buried Conduit:

1. Excavate trench bottom to provide firm and uniform support for conduit. Prepare trench bottom as specified in Section 912 "Trenching" for pipe less than 6 inches in nominal diameter.

2. Install backfill as specified in "Section 912 Trenching."

3. After installing conduit, backfill and compact. Start at tie-in point, and work toward end of conduit run, leaving conduit at end of run free to move with expansion and contraction as temperature changes during this process. Firmly hand tamp backfill around conduit to provide maximum supporting strength. After placing controlled backfill to within 12 inches of finished grade, make final conduit connection at end of run and complete backfilling with normal compaction as specified in Section912 " Trenching."

4. Install manufactured duct elbows for stub-ups at poles and equipment and at building entrances through floor unless otherwise indicated. Encase elbows for stub-up ducts throughout length of elbow.

a. For stub-ups at equipment mounted on outdoor concrete bases and where conduits penetrate building foundations, extend steel conduit horizontally a minimum of 60 inches from edge of foundation or equipment base. Install insulated grounding bushings on terminations at equipment.

5. Underground Warning Tape: Comply with requirements in Section 260553 "Identification for Electrical Systems."

3.04 INSTALLATION OF UNDERGROUND HANDHOLES AND BOXES

A. Install handholes and boxes level and plumb and with orientation and depth coordinated with connecting conduits to minimize bends and deflections required for proper entrances.

B. Unless otherwise indicated, support units on a level bed of crushed stone or gravel, graded from 1/2-inch sieve to No. 4 sieve and compacted to same density as adjacent undisturbed earth.

C. Install handholes with bottom below frost line.

D. Field cut openings for conduits according to enclosure manufacturer's written instructions. Cut wall of enclosure with a tool designed for material to be cut. Size holes for terminating fittings to be used, and seal around penetrations after fittings are installed.

3.05 SLEEVE AND SLEEVE-SEAL INSTALLATION FOR COMMUNICATIONS PENETRATIONS

A. Install sleeves and sleeve seals at penetrations of exterior floor and wall assemblies. Comply with manufacture requirements.

3.06 FIRESTOPPING

A. Install firestopping at penetrations of fire-rated floor and wall assemblies. Comply with manufacture requirements.

3.07 PROTECTION

A. Protect coatings, finishes, and cabinets from damage or deterioration.

1. Repair damage to galvanized finishes with zinc-rich paint recommended by manufacturer.

END OF SECTION

Section 270544
Sleeves and Sleeve Seals for Communications Pathways and Cabling

GENERAL

1.1 WORK INCLUDES

A. Base Bid:
1. Electrical Contractor:
a. Sleeves for pathway and cable penetration of non-fire-rated construction walls and floors.
b. Sleeve-seal systems.
c. Sleeve-seal fittings.
d. Grout.
e. Silicone sealants.

B. Alternate Bids: None

1.2 RELATED WORK

A. Specified Elsewhere: Drawings and general provisions of the Contract apply to this Section.

B. Related Requirements:

1. Section 078413 "Penetration Firestopping" for penetration firestopping installed in fire-resistance-rated walls, horizontal assemblies, and smoke barriers, with and without penetrating items.

1.3 Furnished, but installed by others: N/A

1.4 SYSTEM DESCRIPTION

A. Section Includes:

1. Sleeves for pathway and cable penetration of non-fire-rated construction walls and floors.
2. Sleeve-seal systems.
3. Sleeve-seal fittings.
4. Grout.
5. Silicone sealants.

1.5 QUALITY ASSURANCE

A. Testing Agency Qualifications: Member company of NETA or an NRTL.
1. Testing Agency's Field Supervisor: Certified by NETA to supervise on-site testing.

1.6 REGULATORY REQUIREMENTS

A. National Electric Code 2014 (NFPA 70)

1.7 ABBREVIATIONS: N/A
1.8 SUBMITTALS

A. Product Data: For each type of product.

PART 2.PRODUCTS

2.1 SLEEVES

A. Wall Sleeves:

1. Steel Pipe Sleeves: ASTM A 53/A 53M, Type E, Grade B, Schedule 40, zinc coated, plain ends.
2. Cast-Iron Pipe Sleeves: Cast or fabricated "wall pipe," equivalent to ductile-iron pressure pipe, with plain ends and integral waterstop unless otherwise indicated.

B. Sleeves for Conduits Penetrating Non-Fire-Rated Gypsum Board Assemblies: Galvanized- steel sheet; 0.0239-inch (0.6-mm) minimum thickness; round tube closed with welded longitudinal joint, with tabs for screw-fastening the sleeve to the board.

C. PVC-Pipe Sleeves: ASTM D 1785, Schedule 40.

D. Molded-PVC Sleeves: With nailing flange for attaching to wooden forms.

E. Molded-PE or -PP Sleeves: Removable, tapered-cup shaped, and smooth outer surface with nailing flange for attaching to wooden forms.

F. Sleeves for Rectangular Openings:

1. Material: Galvanized-steel sheet.
2. Minimum Metal Thickness:

a. For sleeve cross-section rectangle perimeter less than 50 inches (1270 mm) and with no side larger than 16 inches (400 mm), thickness shall be 0.052 inch (1.3 mm).
b. For sleeve cross-section rectangle perimeter 50 inches (1270 mm) or more and one or more sides larger than 16 inches (400 mm), thickness shall be 0.138 inch (3.5 mm).

2.2 SLEEVE-SEAL SYSTEMS

A. Description: Modular sealing device, designed for field assembly, to fill annular space between sleeve and pathway or cable.

1. Sealing Elements: EPDM rubber interlocking links shaped to fit surface of pipe. Include type and number required for pipe material and size of pipe.
2. Pressure Plates: Carbon steel.
3. Connecting Bolts and Nuts: Carbon steel, with corrosion-resistant coating, of length required to secure pressure plates to sealing elements.

2.3 SLEEVE-SEAL FITTINGS

A. Description: Manufactured plastic, sleeve-type, waterstop assembly made for embedding in concrete slab or wall. Unit shall have plastic or rubber waterstop collar with center opening to match piping OD.

2.4 GROUT

A. Description: Nonshrink; recommended for interior and exterior sealing openings in non- fire-rated walls or floors.

B. Standard: ASTM C 1107/C 1107M, Grade B, post-hardening and volume-adjusting, dry, hydraulic-cement grout.

C. Design Mix: 5000-psi (34.5-MPa), 28-day compressive strength.

D. Packaging: Premixed and factory packaged.

2.5 SILICONE SEALANTS

A. Silicone Sealants: Single-component, silicone-based, neutral-curing elastomeric sealants of grade indicated below.

1. Grade: Pourable (self-leveling) formulation for openings in floors and other horizontal surfaces that are not fire rated.
2. Sealant shall have VOC content of 250 g/L or less when calculated according to 40 CFR 59, Subpart D (EPA Method 24).
3. Sealant shall comply with the testing and product requirements of the California Department of Health Services' "Standard Practice for the Testing of Volatile Organic Emissions from Various Sources Using Small-Scale Environmental Chambers."

B. Silicone Foams: Multicomponent, silicone-based liquid elastomers that, when mixed, expand and cure in place to produce a flexible, no shrinking foam.

PART 3. EXECUTION

3.1 SLEEVE INSTALLATION FOR NON-FIRE-RATED ELECTRICAL PENETRATIONS

A. Comply with NECA 1.

B. Comply with NEMA VE 2 for cable tray and cable penetrations.

C. Sleeves for Conduits Penetrating Above-Grade Non-Fire-Rated Concrete and Masonry- Unit Floors and Walls:

1. Interior Penetrations of Non-Fire-Rated Walls and Floors:

   a. Seal annular space between sleeve and pathway or cable, using joint sealant appropriate for size, depth, and location of joint. Comply with requirements in Section 079200 "Joint Sealants."
   b. Seal space outside of sleeves with mortar or grout. Pack sealing material solidly between sleeve and wall so no voids remain. Tool exposed surfaces smooth; protect material while curing.

2. Use pipe sleeves unless penetration arrangement requires rectangular sleeved opening.
3. Size pipe sleeves to provide 1/4-inch (6.4-mm) annular clear space between sleeve and pathway or cable unless sleeve seal is to be installed.
4. Install sleeves for wall penetrations unless core-drilled holes or formed openings are used. Install sleeves during erection of walls. Cut sleeves to length for mounting flush with both surfaces of walls. Deburr after cutting.
5. Install sleeves for floor penetrations. Extend sleeves installed in floors 2 inches (50 mm) above finished floor level. Install sleeves during erection of floors.

D. Sleeves for Conduits Penetrating Non-Fire-Rated Gypsum Board Assemblies:

1. Use circular metal sleeves unless penetration arrangement requires rectangular sleeved opening.
2. Seal space outside of sleeves with approved joint compound for gypsum board assemblies.

E. Roof-Penetration Sleeves: Seal penetration of individual pathways and cables with flexible boot-type flashing units applied in coordination with roofing work.

F. Aboveground, Exterior-Wall Penetrations: Seal penetrations using steel pipe sleeves and mechanical sleeve seals. Select sleeve size to allow for 1-inch (25-mm) annular clear space between pipe and sleeve for installing mechanical sleeve seals.

3.2 Underground, Exterior-Wall and Floor Penetrations: Install cast-iron pipe sleeves. Size sleeves to allow for 1-inch (25-mm) annular clear space between pathway or cable and sleeve for installing sleeve-seal system. SLEEVE-SEAL-SYSTEM INSTALLATION

A. Install sleeve-seal systems in sleeves in exterior concrete walls and slabs-on-grade at pathway entries into building.

B. Install type and number of sealing elements recommended by manufacturer for pathway or cable material and size. Position pathway or cable in center of sleeve. Assemble mechanical sleeve seals and install in annular space

between pathway or cable and sleeve. Tighten bolts against pressure plates that cause sealing elements to expand and make watertight seal.

3.3 SLEEVE-SEAL-FITTING INSTALLATION

A. Install sleeve-seal fittings in new walls and slabs as they are constructed.

B. Assemble fitting components of length to be flush with both surfaces of concrete slabs and walls. Position waterstop flange to be centered in concrete slab or wall.

C. Secure nailing flanges to concrete forms.

D. Using grout, seal the space around outside of sleeve-seal fittings.

END OF SECTION 270544

SECTION 283111
DIGITAL, ADDRESSABLE FIRE ALARM SYSTEM

PART 1 - GENERAL

1.1 DESCRIPTION OF WORK

A. Provide a 24 VDC automatic addressable fire alarm system per City of Ventura Fire Department standards and communication with a central monitoring station via connection point indicated on the Drawings. Contractor to provide all hardware, software, and labor to connect monitoring capability to the central monitoring station via primary and secondary receiver.

B. System Description and Function

1. The system shall consist of a fire alarm control unit, smoke detection, audio alarms, and accessories including wire and conduit. The entire system shall be equipped with a secondary source of power meeting the requirements of NFPA 72.

2. The system shall be installed to be capable of being expanded at any time up to 25% of initial capacity.

3. The system wiring shall be a Class B Pathway as acceptable to the (AHJ).

4. In buildings provided with automatic fire sprinklers activation of any fire sprinkler valve tamper switch shall cause a supervisory signal.
5. Fire Alarm Sequence: The system alarm operation subsequent to the alarm activation of any area or duct detector, or waterflow switch shall be as follows (Reference SOO On Sheet FA-001 for applicable input/output):

   a. Cause audio signals to alarm throughout the building.

   b. Automatically notify the central station.

   c. Display individual address at fire alarm control unit with AHJ defined message.

   d. Light an LED on the smoke detector initiating the alarm.

6. The control unit shall provide power, annunciation, supervision and control for the fire detection and alarm system. The control unit shall be modular in construction, and contain all equipment necessary to operate according to the schedule in the following paragraphs of this Specification and the Drawings. The system shall be designed so that alarm indications override trouble conditions. The unit shall be capable of measuring the sensitivity of the addressable photoelectric detectors connected to it. The control unit shall allow 25% of growth as part of the system.

C. There shall be no limit, other than maximum system capacity, as to the number of addressable devices that may be in alarm simultaneously.

1.2 QUALITY ASSURANCE

A. Codes and Standards: Comply with the codes and standards as indicated in Section 1.4 of this Section.

B. Tests: The Contractor shall provide all meters, smoke generating equipment and test equipment and test the system in the presence of AHJ. The tests shall include the following:

1. Each resettable initiating device for alarm including smoke test of all smoke detectors with smoke generating equipment.

2. The audio system for sound level (dBa meter) if requested by AHJ.

3. Verify Class B Pathway of each signaling line circuit and notification appliance circuit.

4. System supervisory reporting.

5. Operation of system under stand-by power conditions (24 hours/5 minutes of alarm, see battery calculations).

6. Provide a test plan prior to the AHJ prior to requesting final acceptance test.

7. All input and output items listed in the Sequence of Operations Matrix on Sheet FA-001.

8. Reporting to the central monitoring station.

9. Certified test report to verify that the system and all components functioned properly and as intended, signed by both the Contractor and equipment supplier. Provide written certification per NFPA 72 from the fire alarm system installer that the system is in compliance with all applicable code requirements.

C. Contractor qualifications: The Contractor shall hold a current California C-10 contractor's license.

D. Contractor shall demonstrate satisfactory installations of comparable systems within the preceding five years, including references.

E. Ability to provide emergency response to effect repair within 4 hours by factory certified personnel during the warranty period.

F. Contractor shall provide proof that the fire alarm contractor is Underwriters Laboratories, Inc. (UL) listed under the classification of "PROTECTIVE SIGNALING SERVICES-LOCAL, AUXILIARY, REMOTE STATION AND PROPRIETARY (UUJS).

G. Final connections and system programming shall be performed only by NICET II or higher Technician. Name of Technician and certification number shall be recorded on the form titled; ‘CONTRACTOR’S STATEMENT OF COMPLAINT INSTALLATION AND AFFIDAVIT OF PERSONNEL QUALIFICATIONS’ (see attached form).

H. Contractor shall provide a copy of the following (NICET) Certificates. Proof that the certificate holders are a part of the fire alarm contractor's local facility servicing this project and will be actively involved in this project.

1. State of California certification for fire alarm system installations.

2. Technician Level 2.

3. Technician Level 3.

I. Documentation that the fire alarm contractor has on staff personnel factory-trained and certified for the equipment proposed for this project. Also, a statement that personnel meeting these qualifications are in the local facility, and will be maintained at that facility throughout the project and the warranty period.

1.3 SUBMITTALS

A. The following list includes but does not limit the required shop drawing and product data information that shall be submitted:

1. Collings & Associates, LLC AHJ Approved Drawings Shall Be Submitted with Contractor Information in Title Block. No changes to approved drawings shall be made without approval by AHJ or Collings & Associates, LLC. DWG Files will be provided to be used by C-10 Contractor.

2. Catalogue sheets of all components indicating technical data, size, and capacities. Reference catalogue sheets to specification paragraphs.

3. Submit parts list of all equipment with manufacturer's data sheets, the location of each piece and device (i.e. elevation of alarm units and cabinets), battery calculations, and proposed conduit layout diagram for both vertical and horizontal runs. Identify location and sizes of terminal cabinets.

4. Submittals shall include State Fire Marshal LISTING SHEETS, including LISTING NUMBER with ANNUAL UPDATE and EXPIRATION DATE, for ALL SYSTEM COMPONENTS. SUBMITTALS WILL BE AUTOMATICALLY REJECTED IF COMPLETE LISTING INFORMATION DOES NOT ACCOMPANY SUBMITTAL. Complete point-to-point wiring diagram of the entire system showing interconnection of identified devices, and controls shall be submitted to, and approved by, the AHJ before installation. Complete conduit layouts at each floor and conduit riser diagrams.

5. UL listing of all components for their intended use. Data sheets are required for all system components. Including but not limited to, control units, batteries. Battery chargers, signal initiating devices, audible alarms, visual alarms, annunciators, terminals, cabinets, wiring conductors and relays. All equipment drawing alarm or supervisory current shall have documentation of the current draw highlighted in the submittal information.

6. Enclosures indicating:

   a. Metal and gage.

   b. Finish.

7. Output rating of all alarm system components, point-to-point Ohm's law voltage drop calculations not to exceed 10% or the maximum the equipment manufacturer allows battery calculations.

8. An index and title sheet shall be put at the front of the product data submittal to organize and speed review.

B. Operation and Maintenance Manuals: Submit shop drawings and operation and maintenance manuals. Submit manuals, each of which shall include all instructions necessary for proper operation and maintenance of the system, complete circuit diagrams, wiring and termination schedule for each circuit entering and or leaving each piece of equipment, schematic diagrams of each major component, including a replacement parts list with part numbers, name and telephone number of local supplier. Include any portions of the material list and shop drawings that are not included in the foregoing.

C. City of Ventura Fire Department approval of the installed system. Submit fire alarm system plans to AHJ for approval prior to installation. Plan Submittal shall include all applicable information as indicated in the California Fire Code Section 907.1.2. Mounting details shall be shown for pull stations, audio devices, annunciator units, and fire alarm control units.

D. Furnish a letter from the manufacturer stating that the manufacturer has a factory warehouse at which spare parts are stocked and where a field service engineer permanently resides, located within 150 miles of the Job Site, factory trained and one whose primary duty is field service.

E. As-built Drawings shall be submitted in Auto CAD Format.

F. Two full days (16 hours) of training shall be provided by a field engineer employed by the equipment manufacturer. Training shall be provided at the job site after completion of the Fire Alarm System installation.

G. NFPA 72 Record of Completion shall be completed by installing contractor at the end of the project and provided to AHJ.

H. Written operating procedures shall be provided at a location approved by the AHJ.

1.4 REFERENCES

A. Fire alarm system, equipment, installation, and wiring materials and methods used shall comply with the following codes and standards:

1. 2020 National Electrical Code.

2. 2022 NFPA 72, including appendices.

3. Title 19, California Administrative Code.

4. Title 24, California Administrative Code.

5. 2022 California Building Code.

6. 2022 California Mechanical Code.
7. 2022 California Fire Code.
8. California State Fire Marshal's requirement.
9. UL 38, 217, 228, 268, 268A, 346, 464, 521, 864, 1481, 1638, 1730, 1971.
10. American Disabilities Act.
11. NFPA 90A
12. National Electrical Manufacturers Association (NEMA)
    a. Guide for the proper use of Smoke Detectors.
    b. Guide for the proper use of Duct Smoke Detectors.

B. Materials and/or installation shall meet or exceed the above referenced standards.

C. The system including all components shall be listed by the State Fire Marshal and Underwriters Laboratories Inc. for use as a fire protective signaling system.

D. The system must have proper listing and / or approval from the following nationally recognized agencies:

1.	UL	Underwriters Laboratories, Inc.
2.	UL categories	UUKL, PAZX, UDTZ, QVAX as well as the requirements of NFPA 90A, HVAC, and NFPA 92A & 92B, Smoke Control.
3.	CSFM	California State Fire Marshal
4.	FM	Factory Mutual
5.	ISO	International Standards Organization

PART 2 - PRODUCTS

2.1 MATERIALS AND EQUIPMENT

A. All materials, equipment, accessories, devices and other facilities and appurtenances covered by these specifications or noted on the Drawings shall be new, best suited for the intended use and shall conform to applicable and recognized standards for their use. The use of obsolete or discontinued equipment shall not be allowed. The system shall be from one of the following acceptable manufacturers:
   1. Honeywell (Notifier and System Sensor)
   2. Or Approved Equal

B. This specification document provides the requirements for an analog addressable, multiprocessor-based fire alarm control unit. This system shall include, but not be limited to, system cabinets, control and communication equipment, Switching Power Supply Unit, System Control Unit, Analog Loop Unit with Keyboard Display Unit or Quad/Eight Zone Unit, audible and visual notification appliances, together with associated peripheral devices, programming, wiring and other relevant components to provide a complete and operable system.

2.2 CONTROL EQUIPMENT

A. The control unit shall provide power, annunciation, supervision, and control for the fire alarm system. The control unit shall be modular in construction, and contain all modules necessary to operate in compliance with the schedule in the "System Description and Function" paragraph of this Specification and applicable Drawings. The system shall be capable of reading and displaying at the control unit the sensitivity of remote addressable ionization and photoelectric detection devices. Individual, addressable detection device alarm threshold shall be adjustable from the control unit. The detection system shall remain 100 percent operational and capable of responding to an alarm condition while in the routine maintenance mode. Addressable detection devices shall be individually identified by the system, and any quantity of addressable detection devices shall be in alarm at any time up to the total number connected to the system.

B. The Dynamic supervision of the system electronics, wiring, detection devices and software shall be provided by the control system. Failure of the system hardware or wiring shall be indicated by type and location on the alphanumeric annunciator. Software and processor operation shall be monitored by an independent hardware watchdog, which will indicate their failure. The system will provide failsafe operation,
i.e. incoming alarms shall automatically override all other modes of operation, and the unit shall automatically return to normal operating mode from any operator initiated mode.

C. Ground fault detection shall be provided for all initiating and audible circuits. All system modules shall be capable of operation in any unused unit location. Lamp test capability shall be provided to test all visual unit indicators and associated software. Provisions shall be made for remote trouble and remote alarm silencing switches. The control unit shall be equipped with a silence before reset feature, designed to prevent accidental system reset during an alarm condition. The system alarm lamp shall flash upon receipt of any alarm condition. Acknowledgment of the alarm by operation of the silence switch shall silence the audible alarm and cause the alarm lamp to light steadily. Receipt of subsequent alarms shall cause the audible devices to resound and the alarm lamp to flash.

D. The system trouble lamp shall flash and an integral trouble buzzer shall sound upon the occurrence of any trouble condition. Acknowledgment of the trouble condition by operation of the silence switch shall silence the audible alarm and cause the trouble alarm to light steadily. Receipt of subsequent troubles shall cause the trouble buzzer to resound and the trouble lamp to flash.

E. Individual input and output device addressability as well as remote sensitivity measurement shall all be performed on the same pair of wires. Wiring shall be Class B Pathway and no special wiring sequence shall be required on addressable device circuits. An unlimited number of wiring branches shall be permitted with no loss of supervision. The system shall be capable of having all addressable devices in alarm simultaneously.

F. The service mode shall permit the arming and disarming of individual detection or output devices as well as manually operating output devices. Status of these devices shall be displayed upon command from the control unit. The unit shall automatically return to the normal mode in the event the unit remains unattended in the service mode.

G. The unit shall be capable of receiving and processing alarms even when in the service mode.

H. The fire alarm control unit shall operate from a three wire 120 VAC power supply and internal 24V back-up battery. All power connections, both AC and DC, shall be separately fused within the control unit. Light emitting diodes (LED's) shall be included to indicate (green) system power, (yellow) trouble, and (red) alarm; trouble and alarm shall also be annunciated on an alpha-numeric display that will give device number and location plus diagnosis of trouble. An audible device shall sound within the control unit for alarm or trouble. This device shall have two distinct sounds and shall be silenceable by the acknowledge/silence switch. Alarms shall override any trouble condition.

I. The control unit power supply shall be capable of powering up to 159 addressable detectors, 159 modules and four Class B built in notification appliance circuits. All system expansion modules shall interconnect through a card edge connector and shall require no inter-module wiring.

J. The control unit shall be capable of measuring and adjusting the sensitivity of detectors. An alpha-numeric display shall be provided to display custom messages and give readings of the detector sensitivity, detector by detector. Each device on an addressable signaling line circuit shall be polled continuously to include the following: sensitivity, response, opens, shorts, ground faults, functionality, and status.

K. The control unit shall report the failure of a device's transmitting component(s) failure, open, or shorted, on an addressable signaling line circuit. The device shall be recognized and identified by location within the circuit to the specific device, and all other devices on the circuit shall continue to function.

L. The control unit shall report, by specific device number, any device removed from an addressable signaling line circuit and all other devices shall continue to function.

M. The control unit shall allow changing the status of configured circuits (arming and disarming and changing status of relays). If any change in status degrades system operation as configured, a trouble condition shall be reported and remain until system operation again meets configured status.

N. The control unit shall have the ability to perform multiple operations at the same time. These operations shall include, but not be limited to, timed functions and multiple configured sequences.

O. The control unit shall have the ability to support a printer and CRT serial port (EIA- 232C). This terminal shall be used for permanent records of the system's status and detector chamber voltages, and shall also be capable of system control as configured.

P. The control unit shall allow for expansion and shall also be configurable without system interwiring.

Q. The system shall provide a printer interface for 80-column printers and a history file with 800-event capacity in nonvolatile memory with separate 200-event alarm only file.

R. New unacknowledged alarms and troubles shall be distinctively displayed on both the visual display and the printer and differentiated from previous alarms and troubles.

S. The system shall automatically indicate the total quantity of alarms and of troubles that have occurred prior to reset at the control unit.

T. No alarm or trouble indication shall be resettable until it has been acknowledged. It shall not be possible to reset the system until all alarms have been acknowledged.

U. Control functions shall be assigned on the basis of Boolean Logic Equations.

V. Control functions shall be assigned on the basis of time of day, day of week, and with a holiday schedule of up to thirty holidays per year. Each addressable detection device shall report its condition to the system control unit every four seconds in a manner such that failure of the connections to or internal electronics of the device will result in a trouble signal which identifies the specific device involved.

W. Addressable photoelectric type smoke detector sensitivity shall be reported at the control unit when requested. The electronic readout of detector sensitivity shall be equivalent to sensitivity readings made with a meter for non-addressable detector, but shall be read at the control unit digital annunciator. It shall be possible to change the detector sensitivity from the control unit within maximum and minimum values as defined by the UL listing of the detectors.

X. Water-flow switches, tamper switches, and OS & Y valves shall be equipped with an addressable monitor module which shall be supervised identically as addressable detectors.

Y. Water-flow switch alarm operation and automatic sprinkler system supervisory switches shall be wired and annunciated in conformance with the National Fire Codes.

Z. A trouble signal shall be initiated for each addressable device for which the automatic sensitivity measurement is too insensitive.

AA. The supervised and powered parallel output circuits shall be capable of use as audible signal circuits, fire extinguishing release circuits, municipal tie, remote station connection or general alarm release service. They shall be capable of providing 1.5 amp at 24 VDC.

BB. Provision for control relays in the firm alarm control unit shall be included for relays having dry contacts rated 120 VAC 3 amp inductive.

CC. Remote relays located on detector bases or double gang outlets throughout the building shall be controlled in the same manner as unit mounted relays.

DD. The control unit enclosure shall be suitable for surface mounting. A locked door shall be provided to limit access to individuals authorized access to the unit. The enclosure shall be marine grade as well as the battery box if required.

EE. All panel components shall be plug-in, dynamically supervised and easily replaceable. Field wiring shall be connected to the unit with removable multi- conductor connectors to facilitate rapid removal and replacement of both the module and wiring for ease of servicing the unit.

FF. Visual indicators shall be long life LED's. Modules capable of initiating a system trouble shall display individual trouble indications on the alpha-numeric annunciator.

GG. Batteries

1. Battery shall be Sealed lead acid type and accommodate the voltage determined by calculation.

2. Battery shall have sufficient capacity to power the fire alarm system for not less than 24 hours plus 5 minutes of alarm upon a normal AC power failure.

3. The batteries are to be completely maintenance free. All system batteries shall have manufacture date and be labeled with the installation dates.

2.3 SIGNALING LINE CIRCUITS

A. Signaling line circuits shall be provided by a loop control module.

B. Each signaling line circuit shall consist of a two-wire circuit, allowing multiple taps. Each initiating circuit shall accommodate up to 318 addressable/programmable initiating devices. Each circuit shall be a Class B Pathway.

C. Upon activation of any addressable/programmable device installed in the circuit, the system shall automatically report the status of the device and initiate the sequence of operations specified for that device, e.g., alarm, local, general, reporting, trouble reporting only, etc. Alarm shall have priority over trouble. Trouble conditions shall be reported to include the device number, location, and type of trouble.

D. The signaling line circuits shall maintain complete reporting of device status while in trouble, due to any addressable device having its active transmitting component fail, open or shorted. The initiating circuits shall detect a line break and provide information to the control unit allowing the user to determine between which two devices the break has occurred.

2.4 OUTPUT CIRCUIT

A. An output circuit for operation of notification appliances shall be provided by a programmable module. This module shall be operable by the control unit.

B. Upon command by the control unit, the output circuits shall power tie circuits, which shall be limited energy outputs.

C. The module shall be supervised by the control unit for open and shorted circuits. Open circuits shall respond in similar manner. Each output circuit shall be individually fused.

D. Output circuits may be user controlled. If such control degrades system configuration, a trouble condition shall be reported.

2.5 RELAY MODULE

A. A programmable relay module shall be provided for control of fans supplying more than 2,000 cfm.

B. The module shall be system interconnected and shall be operable by the control unit or manually.

C. The module shall be Underwriters' Laboratories, Inc. and California State Fire Marshal listed.

2.6 ALARM INITIATING DEVICES

A. The addressable photoelectric smoke detector shall be listed by Underwriters Laboratories, Inc. and California State Fire Marshal. The detector shall contain a long life light-emitting diode (LED) as its light source, and a photo diode as a light receiver. An automatic gain control circuit shall be provided to maintain correct sensitivity by compensating for detector aging and dirt accumulation. The detector shall be a plug-in twist/lock unit that allows for each connection to its mounting base.

   1. It shall be possible to adjust and/or electronically measure the sensitivity of each individual addressable detector from the control unit. Relative sensitivity or manual methods that check the detector at the maximum allowable obscuration will not be considered as being equivalent.

   2. The addressable photoelectric detector shall provide complete supervision of the detector optics. The detector shall be supervised for complete failure of the LED light source or a critical reduction in the light output of the automatic gain control circuit.

   3. The detector mounting base shall be of the twist/lock type with screw terminals for field wiring. Pig-tails or in line connectors will not be permitted.

B. The addressable programmable interface module shall provide an interface for direct shorting contact devices to the Addressable Input. This unit is used with water-flow switch, tamper switch and OS&Y valves.

C. The air duct detector shall operate on a cross-sectional air sampling principle to overcome stratification and the skin effect. The air duct detector shall consist of an addressable photoelectric detector mounted in an air duct sampling assembly and sampling tube that protrudes across the duct of the ventilating system.

2.7 AUDIO NOTIFICATION APPLIANCES

A. Audio alarm shall be synchronized per ADA requirements and have a minimum 15 candela intensity flashing light and alarm as an integral unit. Visual components shall operate from the 24V DC polarized notification appliance circuits. All devices shall mount on 4- x 4-inch electrical boxes. Light will flash at the rate of one flash per second, minimum and two flash per second maximum.

B. The minimum sound level shall be not less than 15 dB above ambient noise for the preceding tone of all fire alarm conditions. Horn shall be capable of producing a synchronized temporal code 3 pattern preceding tone at a minimum dBA level of 89 dBA at 10'. Audio alarm shall be semi-flush mounted and located not more than 80 inches to the bottom of the lens above finished floor for wall mounted appliances and center of ceiling for ceiling mount appliances. All visual appliances shall be mounted in strict accordance with NFPA 72.

2.8 TRANSMITTERS

A. Digital alarm communications transmitter capable of communicating with central station monitoring via cellular communicator shall be provided. Coordinate with AHJ to ensure compliance with reporting requirements and to ensure compatibility with central station monitoring receiving equipment.

2.9 CONDUCTORS

A. All conductors shall be solid or stranded copper with UL THHN 600 volt, insulation, minimum size #18 AWG or larger. All conductors shall be run in conduit as indicated on the drawings. Two conductor cables shall be used with two wire devices and four conductor cables shall be used for four wire devices. Two conductor cables shall consist of one red and one black wire. Four conductor cables shall have an additional yellow and blue wire. All conduit in unfinished areas shall be provided with red bands every 10-feet to identify the raceway as fire alarm.

2.10 SPARE PARTS

A. Spares of all devices shall be provided to the AHJ for maintenance or expansion of the system. This shall include all equipment listed on the fire alarm equipment schedule that may not be readily available to AHJ 5% of total quantity or 10 each whichever is less.

PART 3 - EXECUTION

3.1 GENERAL

A. Control and other units shall be mounted with clearances for observation and testing. All fire alarm junction boxes shall be marked for identification. All fire alarm terminal cabinets shall be labeled with the following "FIRE ALARM TERMINAL CABINET." Flexible connectors shall be used for all devices mounted in suspended lay-in units.

All conduits, mounting boxes and units shall be hung and fastened with fittings to insure positive grounding throughout the entire system.

B. No wiring other than that directly associated with fire alarm detection, alarm or auxiliary fire protection functions shall be permitted in fire alarm conduits. Wiring splices shall be avoided. If needed, they shall be made only in junction boxes. Transposing or changing color coding of wires will not be permitted. All conductors in conduit containing more than one wire shall be labeled on each end with "E-Z markers." Conductors in cabinets shall be formed and harnessed so that each drops off directly opposite to its terminal. F.A. terminals shall be labeled. All controls, function switches, etc., shall be labeled on all equipment panels. All wiring shall be checked and tested to insure that there are no grounds, opens or shorts.

C. Paint all Fire Alarm boxes red and identify F.A. conduits with red bands every 10'-0" on center in all unfinished areas. Consult with AHJ for all finished areas.

3.2 INSTALLATION

A. Locate and install equipment and accessories as shown on the approved drawings.

B. Mount control units and terminal cabinets such that terminals are located between 42 and 66 inches above the finished floor. The text from all displays of control units or annunciator panels should be within the average site line.

C. Minimum wire size shall be No. 18 AWG at 25 volts, type THHN, 600 volt, stranded copper, installed in metallic conduit as indicated on the drawings. Wire size shall be increased appropriately to maintain voltage and current capacity. All wires shall be identified with substantial markers. Spare conductors are to be provided on a ten percent (minimum two conductors) schedule per riser; annunciator units shall be wired for full capacity. No splicing will be allowed in terminal or device boxes. All connections shall be made on terminals. There shall be no below-grade splicing. Below grade wiring shall be listed for that intended use.

D. Supervised wiring shall be continuous, parallel branches ("T" taps) are not permitted regardless of the method of supervision employed.

E. Conduit shall be EMT above grade and in buildings; schedule 40 PVC to be used underground. All concealed fire alarm system conduit shall be externally identified at 10 foot intervals in each space, and at "J" box covers by permanent red paint suitable for the purpose. All fire alarm system wiring shall be installed in conduit unless otherwise noted on the drawings independent of all other electrical circuits. Magnetic door holding circuits and other non-power limited circuits shall be in separate raceways.

F. Exposed flexible conduit as used for attachment to water-flow and valve tamper switched or similar application shall be liquid-tight and shall be minimum length required for neat and secure installation. Flexible conduit lengths shall not exceed three feet. Flexible conduit shall not be buried nor located closer than 12 inches to grade.

G. Where smoke detectors are shown, smoke detector quantity and spacing shall be as recommended by the manufacturer and NFPA. Detectors are not allowed within 3- feet of air diffusers.

H. All fire alarm system equipment shall be installed in NEMA 1 enclosures for interior locations. Equipment shall include proper mounting boxes, hardware, and fittings for the respective building surfaces and finishes.

I. All equipment and devices installed in exterior and in wet locations shall be installed in NEMA 4 enclosures or otherwise approved for weatherproof use.

J. Breaker units shall be provided with lockdown clips for circuit breakers supplying fire protection circuits. Circuit breakers shall be permanently and clearly identified by painting it red.

K. All Duct Mounted Smoke Detectors shall be mounted and weatherproofed to the ductwork, as required, by the Mechanical Contractor. They shall be furnished and wired by the Fire Alarm Contractor. Access panels shall be provided for all duct mounted detectors per NFPA 90A. Sampling tubes shall be accessible via AHJ approved access panels.

3.3 TESTS AND REPORTS

A. In addition to tests required in this Section, the Contractor shall perform all electrical and mechanical tests required by the equipment manufacturer, and AHJ. In addition, via the printer terminal, provide a printout of the sensitivity readings of each addressable ionization or photoelectric detector connected to the control unit. The sensitivity readings shall be for each detector at its operational location under environmental conditions.

B. A final test report shall be prepared by the Contractor. Submit one (1) copy to the AHJ. The report shall include, but not be limited to:

1. A complete list of equipment installed and wired.

2. Certify that all equipment is properly installed and functions and conforms to these specifications.

3. A print out of all devices connected to the system.

4. Sensitivity settings for each photoelectric detector as measured in place with the HVAC system operating.

5. Technician's name, certificate number and date.

C. After completion of all the tests and adjustments listed above, and review and approval by the City of Ventura Fire Department of data and test report, the Contractor shall submit the following information to AHJ.

1. "As-built" conduit layout diagrams including installed wiring, color coding, wire tag notations for exact locations of all installed equipment, internal wiring of equipment and battery calculations of the installed system (on permanent reproducible mylar originals). Provide AutoCAD files to AHJ.

2. Complete "as-built" CAD Files shall be provided to AHJ.

3. Detailed catalog data on all installed systems components (three (3) copies).

4. A final copy of the test report described in paragraph 3.3 B above (three (3) copies).

D. Prior to calling for final test, the contractor shall conduct a 100% pre-test of all system components to insure complete operation. Once the pre-test is complete, the contractor shall sign a verification sheet that states a 100% functional test of the fire alarm system has been conducted and provide it to the AHJ.

E. Final tests and inspections shall be held in the presence of City of Ventura Fire Department. The Contractor shall supply personnel and required auxiliary equipment (smoke generator, decibel meter for this test without additional cost to AHJ. The completed fire alarm system shall be tested to ensure that it is operating properly. This test will consist of:

1. Activation of all detection devices. All devices of each type, photoelectric detector, duct detector, water flow and tamper switches, shall be activated, and verified for proper function per the specification and custom message location at the control unit alpha-numeric display and remote annunciator and the printer.

2. Smoke detectors shall be tested using a smoke generator or a smoke detector testing tool. Magnets are not an acceptable means of testing.

3. Verification that all audible-visual devices operate and that the audibility of the devices is at the proper sound level (per manufacturer's specifications) throughout the building using a decibel meter and intelligibility meter.

4. Transmit alarm and trouble signal to central monitoring station and confirm receipt of alarms with dispatcher.

F. If the system does not perform to the above criteria, it will not be accepted and the Contractor shall correct all deficiencies and shall re-test the system at Contractor's expense in the presence of City of Ventura Fire Department using the same test criteria.

G. Before final acceptance of the work, the Contractor shall deliver to AHJ three (3) bound copies of a composite "Operating and Shop Maintenance Manual." Each manual shall contain the following:

1. A statement of guarantee including date of termination.

2. Name and twenty-four-hour telephone number of the repair facility to call in the event of equipment failure.

3. Individual factory issued manuals containing all technical information on each specific piece of equipment installed ("typical" data sheets on manuals covering various items are not acceptable).

4. Copy of the system program and installed software.

5. Provide as-built drawings in auto cad format.

H. It shall be the responsibility of the Contractor to obtain the above items, from factory, or elsewhere. Advertising brochures or operational instructions shall not be used in lieu of the required technical manuals. All information shall be for the specific installation for the current project.

3.4 IDENTIFICATION

A. Provide identification of equipment and materials.

3.5 GROUNDING

A. All metallic conduit, cabinets, junction boxes, and exposed non-current-carrying metal parts shall be permanently grounded. A separate No. 10 AWG conductor shall connect a grounding bus bar located in each main terminal cabinet to building ground. The bus bar shall be provided with a minimum of five tubular, pressure type screw terminals sized for no. 18 AWG through no. 10 AWG wire. The ground wire for the fire alarm control unit and the main terminal cabinet shall be grounded via the bus bar.

3.6 DOCUMENTATION

A. Copies of complete as-built installation wiring documentation, internal fire alarm control unit schematics, and NFPA 72 Record of Completion and maintenance manuals are to be submitted to AHJ prior to final acceptance.

B. A copy of the completed NFPA 72 Record of Completion and final acceptance test printout, final as-built drawings, final program software, shall be provided in a separate documentation cabinet adjacent to the main fire alarm control unit.

3.7 SYSTEM TESTING AND INSTRUCTION

A. The entire fire alarm system shall be tested and adjusted by the contractor under the supervision of a factory-trained representative of the manufacturer.

B. Contractor shall furnish necessary equipment and personnel to perform required tests for approval. Performance tests shall be made in the presence of the AHJ. Inspection and testing shall be at the direction of the AHJ. The test is to ensure that all equipment and devices are installed in an approved manner and are performing properly. The completion test report prepared by the contractor, shall be submitted for approval by AHJ. Rectify any deficiencies found and retest.

3.8 INSTRUCTION

A. Contractor shall ensure that manufacturer's representative instruct AHJ for a minimum of (16) Hours in the operation, maintenance, and testing of the system. Factory Maintenance Manuals shall be provided to the AHJ upon completion of testing. Provide software of the same version as installed on original disks. No copies of disks will be accepted unless authorized by the manufacturer in writing.

3.9 WARRANTY

A. The Contractor shall provide a 1-year warranty for all equipment and wiring free from inherent mechanical and electrical defects per the project's warranty requirements.
B. The contractor shall conduct the first annual test during the warranty period in order that any discrepancies noted during the testing can be corrected as a part of the system warranty. This testing shall be included as part of the initial system installation costs.

END OF SECTION 28 31 11

Section 275000
Distributed Communication and Monitoring System

Phoenix G2 Fire Station Alerting System Performance Specifications
Part 1- General

1.00 Overview

This specification is for a Fire Station Alerting system to be installed in one or more fire stations. This new system shall be a US Digital Designs "Phoenix G2" system or equal. It shall be capable of interfacing to, and receiving alerts from a data network, radio network, and two-tone paging system. The system shall be based on standard EIA/TIA 568-B Category 5 data network cabling and shall be installable by a low voltage cabling contractor. The alerting system shall accommodate connections to systems such as lighting control, telephone paging, voice radios, doorbell buttons, and other devices.

These systems and their installation will be specified in other sections and provided by the owner or other trades.

1.01 Section Includes:

Fire Station Alerting system equipment with Fire Station Controller along with an optional expansion unit installed in a central location and peripherals consisting of Room Remotes, Message Remotes and message signs, Turnout Timers and audio speakers located throughout the Fire Station.

1.02 References

A. Underwriter's Laboratories UL-1069.
B. Electronics Industry Association / Telecommunications Industry Association.
C. National Electrical Code.
D. U.S. Dept. of Labor / Occupational Safety and Health Administration.
E. National Fire Protection Association 1221.

1.03 Qualifications

A. Certified low-voltage system installer.
B. Applicable state licenses.
C. Certificate of successful completion of the manufacturer's installation/training school for the equipment being proposed.

1.04 Related Work Provided in Other Specification Sections

A. Unless noted otherwise, the following work is to be provided under other specification sections:

1. Installation of conduits, raceways, and electrical junction boxes.
2. 120 VAC power wiring and outlets.
3. Overhead lighting.

4. Rough openings and framing for equipment cabinets and Room Remotes.

1.05 System Description

A. System hardware shall consist of a Station Alerting Controller and multiple peripheral units. These peripherals shall be one or more Message Remotes with MS-LCD message signs, Room Remotes, and G2 Message Sign. System speakers shall be G2 LED SPEAKER or equivalent speakers for non-lighted applications, US Digital Designs SPEAKER WEATHER-PROOF for the non-lighted speaker outdoor, and G2 OMNIALERT STROBE SPEAKER speakers for apparatus bay and outside applications.

B. All necessary equipment required to meet the intent of these specifications, whether or not enumerated within these specifications, shall be supplied and installed to provide a complete and operating fire station alerting system.

C. System firmware shall be the product of the station alerting system manufacturer with sole control over revisions and/or changes. Manufacturer shall provide, free of charge, product firmware/software upgrades for a period of one year from date of installation for any product feature enhancements. System firmware upgrades shall not require any exchange of parts and shall be capable of being executed via a laptop computer connection, a web browser, and the SSL protocol.

1.06 Submittals

A. Any supplying contractor proposing equipment which is not the base standard for this specification, must provide full submittals at the time of bid. This option shall be exercised at the discretion of the owner/specifying authority.

B. In the event the specifying authority decides to reject the submittals of a supplying contractor, the specifying authority may ask the contractor to re-submit if the discrepancies are minor. Otherwise rejection of submittals means the specified product must be supplied.

Part 2—Products

2.01 Manufacturers

The products specified shall be new and of the standard manufacture of a single reputable manufacturer. As a reference of standard and quality, functionality, and operation, it is the request of the owner that bids be based only on equipment manufactured by US Digital Designs, Tempe, Arizona.

2.02 Cabling

Cabling shall be in strict accordance with local codes and to the cable specifications found in the manufacturer's installation manual.

All peripheral network cabling shall be ANSI/EIA/TIA-568-B Category 5 UTP plenum rated cable run as shown on drawings. Cable jacket shall be YELLOW in color. Certification documents shall be provided for all cabling runs.

Message Remote to BetaBrite message sign data cable shall be flat grey 6 conductor telephone device cable with 6 conductor modular plugs attached on both ends. Wiring shall be straight through.

All speaker cabling shall be 18 gauge, 2 conductor stranded jacketed cable for speakers only and 18 gauge, 4 conductor stranded jacketed cable for Jupiter speaker lights. Optionally, contractors can run two 18 gauge, 2 conductor cables for Jupiter speaker lights.

2.03 Fire Station Controller Equipment

Furnish a Phoenix G2 Fire Station Alerting Controller mounted in a 19" rack cabinet located in a central location (chief's office). Each unit shall have the following equipment factory-installed and interconnected:

A. G2 ATX Station Controller.

B. G2 Message Remote2- POE
C. Audio Tone Unit – ATU.
D. 24 Port Ethernet Switch.
E. 24 Port Power Audio Ethernet Mixer.
F. G2 Uninterruptible Power Supply.
G. Cabling Patch Panel.
F. Radio Mounting Bracket.

2.04 Message Remotes

Furnish as shown on plans, G2 Message Remotes capable of the following functions:

A. Dual Message Sign control.
B. Independently Controlled Dual 15 Watt Audio Amplifiers.
C. Lighting Control.
D. Panel or wall-mountable.
E. Single cable connection.

2.05 Double-Sided Message Remotes

Furnish as shown on plans, Double-Sided Message Remotes w/ 2 Beta-Brite signs attached capable of the following functions:

A. Dual Message Sign control.
B. Independently Controlled Dual 15 Watt Audio Amplifiers.
C. Lighting Control.
D. Cantilever support with attached mounting bracket.
E. Single cable connection.

2.06 Room Remotes

Furnish as shown on plans, Room Remotes capable of the following functions:

A. Integrated Message Display.
B. 15 Watt Audio Amplifier.
C. Lighting Control.
D. Flush or surface mountable.
E. Single cable connection.

2.07 Turnout Timers

Furnish as shown on plans, Turnout Timers capable of the following functions:

A. 2.25" LED Digit Display
B. Count up display showing Minutes and Seconds elapsed during alert
C. Dry Contact triggers to start/stop and reset counter

2.08 Speaker Systems

Speaker systems shall be either 8 ohm or 70 volt, as per design documents. Speakers shall be grouped into "areas" of similar sound level and unit alerting requirements.

2.09 Room Speakers

Speakers shall be Phoenix G2 Illuminated Speaker as called out on the plans.

For suspended ceiling applications, provide appropriate speaker support tile bridge. For hard ceiling applications provide appropriate speaker back box.

2.10 Apparatus Room and Outdoor Speakers

Provide G2 OMNIALERT STROBE SPEAKER as shown on plans.

2.11 LED Lighted Speakers

Provide Jupiter low-voltage G2 LED Light speaker as noted on drawings. This low-voltage lighting shall be 48 VDC and operated by dry contact closure.

2.12 System Diagnostics

A. All active components in the system shall be continuously supervised for both power and data to ensure proper operation and in the case of system faults to aid in troubleshooting.
B. All faults shall be displayed immediately on the associated Communications Gateway.

Part 3—Execution

3.01 Supervision

Only factory trained installers shall install, service, and maintain the specified system.

3.02 Rough Openings

A. Phoenix G2 Station Alerting Controller Cabinet – The rough opening for the Station Alerting Controller rack cabinet shall be 17.25”L x 17.25"H x 6.06” W.
B. Room Remote – The flush mount Room Remote rough opening shall be 5 1/2” H x 13 1/2” W. Maximum high side reach allowed shall be 64” AFF, typical height shall be +48” AFF.

C. Provide access hatches in finished drywall ceiling areas where access is restricted to devices mounted above ceiling.

3.03 Wiring

A. All peripheral network cables terminate on patch panel located in the Station Controller Cabinet and on a single telecommunications outlet on the peripheral end. Telecommunications Outlet jack shall be Panduit CJ5E88TGWH Mini-Com or equivalent.
B. All speaker cabling shall be 18 gauge, 2 conductor stranded, jacketed cable for speakers only and 18 gauge, 4 conductor stranded jacketed cable for Jupiter speaker lights. Optionally, contractors can run two 18 gauge, 2 conductor cables for Jupiter speaker lights.
C. Contractor shall terminate all four (4) pairs of Category 6 cable on manufacturer-approved connectors, and shall test and certify all connections to 100MHz. Provide all cabling test certifications after testing.
D. All wiring shall be free from shorts and faults. Wiring shall be UL listed, NEC and NFPA 70, Article 25 approved.
E. Terminate all network cabling on approved patch panels. Label each jack panel with the room number of each terminating jack and the end of the corresponding cable with the jack panel number and jack number.
F. Message Sign cabling to Message Remote shall be 6 conductor flat “silver satin” type cable or equivalent. Terminate both ends with 6 conductor modular plugs utilizing straight thru wiring (DO NOT turn over conductors). Message Sign to Message Remote cabling shall not be longer than 25 feet to observe proper serial operation.

G. 8 ohm speakers shall have cabling run to nearest speaker, Message Remote, or Room Remote as noted on plans. 70 Volt speakers shall have cabling run to the nearest speaker, Message Remote with 70 volt transformer, or home run back to ATX Station Controller cabinet as noted on plans.
H. Label both ends of all network cabling and the Station Controller Cabinet end of all speaker and lighting cables. Label patch panels in the Station Controller location.

3.04 Outlet Boxes and Conduit

General – Provide pull string in all empty conduit installed in this section. Label conduit ends with conduit usage when practical.

A. Message Remote – In suspended ceiling locations, provide 4” metal J-box with mud ring, as indicated, above finished ceiling. Stub up 3/4” empty conduit from each Message Remote J-box to nearest accessible ceiling, cable tray, or other location as shown. In hard ceiling locations, locate J-box at nearest accessible ceiling location.

   Provide 4” metal J-box with duplex mud ring as indicated for each associated message sign at +7'6” AFF typical (+13' AFF for apparatus bay). Center J-box above doorways and align with other architectural features as directed. Orient mud ring opening horizontally. Provide 3/4” empty conduit between the Message Remote J-box and each of the associated message sign J-boxes (maximum of two). Provide duplex stainless steel J-box covers with 3/4” dia. hole centered in the cover with a Heyco #2840 bushing for all junction boxes.

B. Double-sided Message Remote – Provide 4” metal J-box with mud ring, as indicated, on wall behind sign mounting location. Stub up 3/4” empty conduit from J-box to nearest accessible ceiling, cable tray, or other location as shown. Provide suitable mounting (3/4” plywood typical) behind drywall surface for mounting Double-sided Message Remote bracket. **NOTE: The mounting bracket must support the entire weight of the Message Remote and attached signs.**

C. Room Remote – Provide 3/4” empty conduit from rough opening to nearest accessible ceiling, cable tray, or as shown on drawings. Rough opening to be located +48” AFF typical and no more than +64” AFF.

D. Ceiling Speakers (Hard Ceiling) – Provide Bogen RE84 Ceiling Speaker Enclosures in all hard ceiling applications. Provide 3/4” empty conduit to enclosure and run to nearest accessible ceiling location, cable tray or equipment as shown. Conduit shall also be used to interconnect with other enclosures as shown on construction drawings.

E. Ceiling Speakers (Suspended Ceiling) – Provide Bogen TB8 as appropriate for specified speakers. Provide RE84 ceiling speaker enclosures as required by specifying engineer or client.

F. Apparatus Bay and Outside Speakers – Provide 4” metal J-box with mud ring and cover at each speaker location with 3/4” empty conduit to Message Remote or other location as indicated. Provide a 3/4” dia. hole centered in the J-box cover with a Heyco #2840 bushing to allow speaker cable to run to speaker. Apparatus bay speakers are typically located +13' AFF, outside speakers are typically located +11' AFF. Other heights as noted on drawings.

3.05 Speakers

A. Ceiling Speakers (Suspended Ceiling) – Install SPK-LED-FM LED S86 Speaker through ceiling tiles and tile bridge per manufacturer's specifications. Connect speakers to Room Remotes and Message Remotes as shown. 8 ohm

speaker systems require that the 70 volt transformer be bypassed by the installer. All 8 ohm speakers shall be installed using parallel or series/parallel connections with no less than 4 ohms impedance.

B. Ceiling Speakers (Hard Ceiling) – Install G2 LED Flush Speaker into enclosures and connect to Room Remotes or Message Remotes as shown.

C. Apparatus Bay Speakers – Install G2 OMNIALERT STROBE SPEAKERs to structure per manufacturer's specifications. Connect speakers to Message Remote amplifier via cable in conduit as shown. Dress cabling neatly to minimize visibility.

D. Exterior Speakers – Install Bogen At-2 (to structure per manufacturer's specifications. Connect speakers to correct Message Remote amplifier as shown. Provide CAT6 &18/4 cable boot and install drip loop in cable prior to entry into J-box. Seal entry using appropriate sealant.

3.06 Equipment Mounting

All equipment mounted to drywall shall use appropriate fasteners and drywall anchors. Equipment shall not be directly screwed into drywall using unapproved fasteners such as drywall or wood screws.

3.07 Electrical Power Connections

A. It shall be the responsibility of other trades to provide the appropriate number of dedicated 120 VAC, 20A duplex outlets into the equipment cabinet rough opening. This power feed shall not have any other devices connected directly to it and shall be labeled “Station Alerting”. This electrical circuit shall be connected to the fire station's emergency power system for automatic power provision during loss of utility power.

B. Provide single 120 VAC 15A outlet for each Turnout Timer location. Outlet shall be located to accept standard plug-in wall transformer.

C. Connect all system power supplies and equipment cabinets to a common earth ground utilizing a 14 AWG, or larger, solid conductor which is at minimum the same conductor size as the AC feed wires.

3.08 Environmental Protection

Make certain that all central equipment is accessible for service. Contractor shall notify specifying authority if designated equipment closet does not meet manufacturer's requirements for heat, radiation or static electricity.

3.09 Connections to Other Equipment

A. Lighting Controller (optional) – Connect low voltage dry contact lighting controls (provided by others) to Room Remote, Message Remote or ATU outputs. Low voltage outputs are non-inductive load, 24VDC 1A maximum.

Provide an interposing relay or contactor between the low voltage output and any 120/277 VAC lighting or other load.

B. Local Area Network (optional) - Connect the Fire Station Controller to the general purpose LAN (provided by others) located in the Fire Station. This connection shall be connected back to the central Communications Gateway to allow alerting commands to be sent from the Communications Gateway to the Fire Station Controller. In addition, the connection shall allow remote diagnostics and configuration.

C. Radio System – Connect Audio Input #1 to the dispatch voice radio system (provided by others) as necessary to provide dispatch audio. This connection shall provide a 600 ohm impedance 0 dBm level signal.

End of Section

SECTION 013300
SUBMITTAL PROCEDURES

PART 1 GENERAL

1.01 SUMMARY

A. Section includes: Requirements and procedures for submittals.

B. Related sections:
   1. Section 01_77_00 - Closeout Procedures.

1.02 DEFINITIONS

A. Certificates: Describe certificates that document affirmations by the Contractor or other entity that the work is in accordance with the Contract Documents.

B. Extra stock materials: Describe extra stock materials to be provided for the Owner's use in facility operation and maintenance.

C. Maintenance material submittals: Use this article to categorize maintenance materials submittals requiring no Engineer action other than confirmation of receipt under an explanatory heading.

D. Manufacturer's instructions: Instructions, stipulations, directions, and recommendations issued in printed form by the manufacturer of a product addressing handling, installation, erection, and application of the product; manufacturer's instructions are not prepared especially for the Work.

E. Product data: Product data usually consists of manufacturers' printed data sheets or catalog pages illustrating the products to be incorporated into the project.

F. Samples: Samples are full-size actual products intended to illustrate the products to be incorporated into the project. Sample submittals are often necessary for such characteristics as colors, textures, and other appearance issues.

G. Spare parts: Describe spare parts necessary for the Owner's use in facility operation and maintenance; identify the type and quantity here, but include the actual characteristics of the spare parts in Product as part of the specification of the product.

H. Shop drawings: Shop drawings are prepared specifically for the project to illustrate details, dimensions, and other data necessary for satisfactory fabrication or construction that are not shown in the contract documents. Shop drawings could include graphic line-type drawings, single-line diagrams, or schedules and lists of products and their application.

I. Submittals: Submittals are samples, product data, shop drawings, and others that demonstrate how Contractor intends to conform with the Contract Documents.

J. Tools: Tools are generally defined as items such as special wrenches, gauges, circuit setters, and other similar devices required for the proper operation or maintenance of a system that would not normally be in the Owner's tool kit.

1.03 GENERAL INSTRUCTIONS

A. Certification: Contractor is responsible to determine and verify all field measurements, field construction criteria, materials, dimensions, catalog numbers and similar data, and check and coordinate each item with other applicable approved shop drawings and all Contract requirements.

B. Provide submittals that are specified or reasonably required for construction, operation, and maintenance of the Work.

C. Where multiple submittals are required, provide a separate submittal for each specification section.
   1. In order to expedite construction, the Contractor may make more than
      a. 1 submittal per specification section, but a single submittal may not cover more than 1 specification section:

2. The only exception to this requirement is when 1 specification section covers the requirements for a component of equipment specified in another section.
3. For example, circuit breakers are a component of switchgear. The switchgear submittal must also contain data for the associated circuit breakers, even though they are covered in a different specification section.

D. Edit all submittals so that the submittal specifically applies to only the equipment furnished. Neatly cross out all extraneous text, options, models, etc. that do not apply to the equipment being furnished, so that the information remaining is only applicable to the equipment being furnished.

E. Prepare submittals in the English language. Do not include information in other languages.

F. Present measurements in customary American units (feet, inches, pounds, etc.).

G. Must be clear and legible, and of sufficient size for presentation of information.

H. Minimum page size will be 8 1/2 inches by 11 inches:
1. Maximum page size will be 11 inches by 17 inches.

I. Show dimensions, construction details, wiring diagrams, controls, manufacturers, catalog numbers, and all other pertinent details.

J. Provide submittal information from only 1 manufacturer for a specified product. Submittals with multiple manufacturers for 1 product will be rejected without review.

K. Indicate project designated equipment tag numbers from P&IDs for submittal of devices, equipment, and assemblies.

1.04 SUBMITTAL ORGANIZATION

A. Fully indexed with bookmarks for every section.

B. Sequentially number pages within the tabbed sections:
1. Submittals that are not fully indexed and tabbed with sequentially numbered pages, or are otherwise unacceptable, will be returned without review.

C. Organize submittals in exactly the same order as the items are referenced, listed, and/or organized in the specification section.

D. For submittals that cover multiple devices used in different areas under the same specification section, the submittal for the individual devices must list the area where the device is used.

E. Attachments:
1. Specification section: Include with each submittal a copy of the relevant specification section.
   a. Indicate in the left margin, next to each pertinent paragraph, either compliance with a check (√) or deviation with a consecutive number (1, 2, 3).
   b. Provide a list of all numbered deviations with a clear explanation and reason for the deviation.
2. Drawings: Include with each submittal a copy of the relevant Drawing, including relevant addendum updates.
   a. Indicate either compliance with a check (√) or deviation with a consecutive number (1, 2, 3).
   b. Provide a list of all numbered deviations with a clear explanation and reason for the deviation.
   c. Provide field dimensions and relationship to adjacent or critical features of the Work or materials.

F. Contractor: Prepare submittal information in sufficient detail to show compliance with specified requirements.
1. Determine and verify quantities, field dimensions, product dimensions, specified design and performance criteria, materials, catalog numbers, and similar data.

2. Coordinate submittal with other submittals and with the requirements of the Contract Documents.
3. Check, verify, and revise submittals as necessary to bring them into conformance with Contract Documents and actual field conditions.

1.05 SUBMITTAL METHOD AND FORMAT

A. Submittals in electronic media format:
1. General: Provide all information in PC-compatible format using Windows® operating system as utilized by the Owner and Engineer.
2. Text: Provide text documents and manufacturer's literature in Portable Document Format (PDF).
3. Graphics: Provide graphic submittals (drawings, diagrams, figures, etc) utilizing Portable Document Format (PDF).

1.06 SUBMITTAL PROCEDURE

A. Engineer: Review submittal and provide response:
1. Review description:
a. Engineer will be entitled to rely upon the accuracy or completeness of designs, calculations, or certifications made by licensed professionals accompanying a particular submittal whether or not a stamp or seal is required by Contract Documents or Laws and Regulations.
b. Engineer's review of submittals shall not release Contractor from Contractor's responsibility for performance of requirements of Contract Documents. Neither shall Engineer's review release Contractor from fulfilling purpose of installation nor from Contractor's liability to replace defective work.
c. Engineer's review of shop drawings, samples, or test procedures will be only for conformance with design concepts and for compliance with information given in Contract Documents.
d. Engineer's review does not extend to:
1) Accuracy of dimensions, quantities, or performance of equipment and systems designed by Contractor.
2) Contractor's means, methods, techniques, sequences, or procedures except when specified, indicated on the Drawings, or required by Contract Documents.
3) Safety precautions or programs related to safety which shall remain the sole responsibility of the Contractor.
e. Engineer can Approve or Not Approve any exception at their sole discretion.
2. Review timeframe:
a. Except as may be provided in technical specifications, a submittal will be returned within 14 calendar days.
b. When a submittal cannot be returned within the specified period, Engineer will, within a reasonable time after receipt of the submittal, give notice of the date by which that submittal will be returned.
c. Engineer's acceptance of progress schedule containing submittal review times less than those specified or agreed to in writing by Engineer will not constitute Engineer's acceptance of review times.
d. Critical submittals:
1) Contractor will notify Engineer in writing that timely review of a submittal is critical to the progress of Work.
3. Schedule delays:
a. No adjustment of Contract Times or Contract Price will be allowed due to Engineer's review of submittals, unless all of the following criteria are met:
1) Engineer has failed to review and return first submission within the agreed upon time frame.

2) Contractor demonstrates that delay in progress of Work is directly attributable to Engineer's failure to return submittal within time indicated and accepted by Engineer.

4. Review response will be returned to Contractor with one of the following dispositions:
   a. APPROVED, ACCEPTED or NO EXCEPTIONS TAKEN:
      1) No Exceptions:
         (a) There are no notations or comments on the submittal and the Contractor may release the equipment for production.
      2) Approved with Corrections Noted - See Comments:
         (a) The Contractor may proceed with the work, however, all notations and comments must be incorporated into the final product.
         (b) Resubmittal not required.
      3) Make Corrections Noted - Confirm:
         (a) The Contractor may proceed with the work, however, all notations and comments must be incorporated into the final product.
         (b) Submit confirmation specifically addressing each notation or comment to the Engineer within 15 calendar days of the date of the Engineer's transmittal requiring the confirmation.
   b. AMEND-RESUBMIT:
      1) Correct and resubmit:
         (a) Contractor may not proceed with the work described in the submittal.
         (b) Contractor assumes responsibility for proceeding without approval.
         (c) Resubmittal of complete submittal package is required within 14 calendar days of the date of the Engineer's submittal review response.
      2) REJECTED - See Remarks:
         (a) Contractor may not proceed with the work described in the submittal.
         (b) The submittal does not meet the intent of the Contract Documents. Resubmittal of complete submittal package is required with materials, equipment, methods, etc. that meet the requirements of the Contract Documents.
   c. Receipt acknowledged: Filed for record:
      1) This is used in acknowledging receipt of informational submittals that address means and methods of construction such as schedules and work plans, conformance test reports, health and safety plans, etc.

B. Contractor: Prepare resubmittal, if applicable:
   1. Clearly identify each correction or change made.
   2. Include a response in writing to each of the Engineer's comments or questions for submittal packages that are resubmitted in the order that the comments or questions were presented throughout the submittal and numbered consistent with the Engineer's numbering.
      a. Acceptable responses to Engineer's comments are listed below:
         1) "Incorporated" Engineer's comment or change is accepted and appropriate changes are made.
         2) "Response" Engineer's comment not incorporated. Explain why comment is not accepted or requested change is not made. Explain how requirement will be satisfied in lieu of comment or change requested by Engineer.
      b. Reviews and resubmittals:
         1) Contractor shall provide resubmittals which include responses to all submittal review comments separately and at a level of detail commensurate with each comment.
         2) Contractor responses shall indicate how the Contractor resolved the issue pertaining to each review comment. Responses such as "acknowledged" or "noted" are not acceptable.

3) Resubmittals which do not comply with this requirement may be rejected and returned without review.
4) Contractor shall be allowed no extensions of any kind to any part of their contract due to the rejection of non-compliant submittals.
5) Submittal review comments not addressed by the Contractor in resubmittals shall continue to apply whether restated or not in subsequent reviews until adequately addressed by the Contractor to the satisfaction of the reviewing and approving authority.

c. Any resubmittal that does not contain responses to the Engineer's previous comments shall be returned for Revision and Resubmittal.
1) No further review by the Engineer will be performed until a response for previous comments has been received.

3. Resubmittal timeframe:
a. Contractor shall provide resubmittal within 14 days.
b. When a resubmittal cannot be returned within the specified period, Contractor shall notify Engineer in writing.

4. Review costs:
a. Costs incurred by Owner as a result of additional reviews of a particular submittal after the second time it has been reviewed shall be borne by Contractor.
b. Reimbursement to Owner will be made by deducting such costs from Contractor's subsequent progress payments.

1.07 SHOP DRAWINGS

A. Contractor to field verify elevation, coordinates, and pipe material for pipe tie-in to pipeline or structure prior to the preparation of shop drawings.

B. Details:
1. Fabrication drawings: Drawn to scale and dimensioned.
2. Front, side, and, rear elevations, and top and bottom views, showing all dimensions.
3. Locations of conduit entrances and access plates.
4. Component layout and identification.
5. Weight.
6. Finish.
7. Temperature limitations, as applicable.
8. Nameplate information.

C. Minor or incidental products and equipment schedules:
1. Details:
a. Shop Drawings of minor or incidental fabricated products will not be required, unless requested.
b. Submit tabulated lists of minor or incidental products showing the names of the manufacturers and catalog numbers, with Product Data and Samples as required to determine acceptability.

1.08 PRODUCT DATA

A. Details:
1. Supplier name and address.
2. Subcontractor name and address.

B. Include:
1. Catalog cuts.
2. Bulletins.
3. Brochures.
4. Manufacturer's Certificate of Compliance: Signed by product manufacturer along with supporting reference data, affidavits, and tests, as appropriate.
5. Manufacturer's printed recommendations for installation of equipment.

6. Quality photocopies of applicable pages from manufacturer's documents.

C. Test reports including the following information:
   1. Test description.
   2. List of equipment used.
   3. Name of the person conducting the test.
   4. Date and time the test was conducted.
   5. Ambient temperature and weather conditions.
   6. All raw data collected.
   7. Calculated results.
   8. Clear statement if the test passed or failed the requirements stated in Contract Documents.
   9. Signature of the person responsible for the test.

D. Certificates:
   1. As specified in technical sections.
   2. For products that will be in contact with potable water, submit evidence from a nationally recognized laboratory that the products comply with the requirements of the NSF 61 and NSF 372 standard.

1.09 SAMPLES

A. Details:
   1. Submit labeled samples.
   2. Samples will not be returned.
   3. Provide samples from manufacturer's standard colors, materials, products, or equipment lines.
      a. Clearly label samples to indicate any that represent non-standard colors, materials, products, or equipment lines and that if selected, will require an increase in Contract Time or Contract Price.
   4. Provide number of sample submittals as below:
      a. Total: 3 minimum.
         1) Owner: 1.
         2) Engineer: 2.
         3) Contractor: None.

B. Field samples:
   1. As specified in technical sections.

1.10 DESIGN CALCULATIONS

A. Defined in technical sections:
   1. Calculations must bear the original seal and signature of a Professional Engineer licensed in the state where the project is located and who provided responsible charge for the design.

1.11 CONTRACTOR'S PROFESSIONAL ENGINEER (P.E.) CERTIFICATION FORM

A. Submit a completed Contractor's P.E. Certification Form to comply with technical sections requirement for a professional engineer's certification from an engineer licensed in the state the project is located.

1.12 CLOSEOUT SUBMITTALS

A. Provide closeout submittals as specified in Section 01_77_00.

B. Operation and Maintenance Manuals: final documents shall be submitted as specified in technical sections.

C. Extra materials, spare parts, etc.: Submittal forms shall indicate when actual materials are submitted.

PART 2 PRODUCTS (NOT USED)

PART 3 EXECUTION (NOT USED)

END OF SECTION

SECTION 017700
CLOSEOUT PROCEDURES

PART 1 GENERAL

1.01 SUMMARY

A. Section includes: Contract closeout requirements including:
   1. Final cleaning.
   2. Waste disposal.
   3. Touch-up and repair.
   4. Disinfection of systems.
   5. Preparation and submittal of closeout documents.
   6. Certificate of Substantial Completion.

1.02 FINAL CLEANING

A. Perform final cleaning prior to inspections for Substantial Completion.

B. Employ skilled workers who are experienced in cleaning operations.

C. Use cleaning materials which are recommended by manufacturers of surfaces to be cleaned.

D. Prevent scratching, discoloring, and otherwise damaging surfaces being cleaned.

E. Clean roofs, gutters, downspouts, and drainage systems.

F. Broom clean exterior paved surfaces and rake clean other surfaces of site work:
   1. Police yards and grounds to keep clean.

G. Remove dust, cobwebs, and traces of insects and dirt.

H. Clean grease, mastic, adhesives, dust, dirt, stains, fingerprints, paint, blemishes, sealants, plaster, concrete, and other foreign materials from sight-exposed surfaces, and fixtures and equipment.

I. Remove non-permanent protection and labels.

J. Wash and polish glass, inside and outside.

K. Polish glossy surfaces to clear shine.

L. Clean permanent filters and replace disposable filters when heating, ventilation, and air conditioning units were operated during construction.

M. Clean ducts, blowers, and coils when units were operated without filters during construction.

N. Clean light fixtures and replace burned-out or dim lamps.

O. Probes, elements, sample lines, transmitters, tubing, and enclosures have been cleaned and are in like-new condition.

1.03 WASTE DISPOSAL

A. Arrange for and dispose of surplus materials, waste products, and debris off-site:
   1. Prior to making disposal on private property, obtain written permission from Owner of such property.

B. Do not fill ditches, washes, or drainage ways which may create drainage problems.

C. Do not create unsightly or unsanitary nuisances during disposal operations.

D. Maintain disposal site in safe condition and good appearance.

E. Complete leveling and cleanup prior to Final Completion of the Work.

1.04 TOUCH-UP AND REPAIR

A. Touch-up or repair finished surfaces on structures, equipment, fixtures, and installations that have been damaged prior to inspection for Substantial Completion.

B. Refinish or replace entire surfaces which cannot be touched-up or repaired satisfactorily.

1.05 CLOSEOUT DOCUMENTS

A. Submit following Closeout Submittals before Substantial Completion:
   1. Punchlist of items to be completed or corrected with the request for issuance of Substantial Completion.
   2. Evidence of Compliance with Requirements of Governing Authorities.
   3. Project Record Documents.
   4. Approved Operation and Maintenance Manuals.
   5. Approved Warranties and Bonds.
   6. Keys and Keying Schedule.
   7. Completed contract requirements for commissioning and process start-up.

1.06 EVIDENCE OF COMPLIANCE WITH REQUIREMENTS OF GOVERNING AUTHORITIES

A. Submit the following:
   1. Certificate of Occupancy.
   2. Certificates of Inspection.

1.07 PROJECT RECORD DOCUMENTS

A. Maintain at Project site, available to Owner and Engineer, 1 copy of the Contract Documents, shop drawings, and other submittals in good order:
   1. Mark and record field changes and detailed information contained in submittals and change orders.
   2. Record actual depths, horizontal and vertical location of underground pipes, duct banks, and other buried utilities. Reference dimensions to permanent surface features.
   3. Identify specific details of pipe connections, location of existing buried features located during excavation, and the final locations of piping, equipment, electrical conduits, manholes, and pull boxes.
   4. Identify location of spare conduits including beginning, ending, and routing through pull boxes and manholes. Record spare conductors, including number and size, within spare conduits and filled conduits.
   5. Provide schedules, lists, layout drawings, and wiring diagrams.
   6. Make annotations in electronic format. conforming to the following color code:

Additions:	Red
Deletions:	Green
Comments	Blue
Dimensions:	Graphite

B. Maintain documents separate from those used for construction:
   1. Label documents "RECORD DOCUMENTS."

C. Keep documents current:
   1. Record required information at the time the material and equipment is installed and before permanently concealing.
   2. Engineer will review Record Documents weekly to ascertain that changes have been recorded.

D. Affix civil engineer's or professional land surveyor's signature and registration number to Record Drawings to certify accuracy of information shown.

E. Deliver Record Documents with transmittal letter containing date, Project title, Contractor's name and address, list of documents, and signature of Contractor.

F. Record Documents will be reviewed monthly to determine the percent complete for the monthly pay application.

G. Updated Record Documents are a condition for Engineer’s recommendation for progress payment.

1.08 MAINTENANCE SERVICE

A. Maintenance service as specified in technical specifications.

1.09 SUBSTANTIAL COMPLETION

A. Obtain Certificate of Substantial Completion.

1.10 FINAL COMPLETION

A. When Contractor considers the Work is complete, submit written certification that:
   1. Work has been completed in accordance with the Contract Document:
   2. Punch list items have been completed or corrected.
   3. Work is ready for final inspection.

B. Engineer will make an inspection to verify the status of completion with reasonable promptness.

C. Should the Engineer consider that the Work is incomplete or defective:
   1. Engineer will promptly notify the Contractor in writing, listing the incomplete or defective work.
   2. Contractor shall take immediate steps to remedy the stated deficiencies, and send a second written certification to the Engineer that the Work is complete.
   3. Engineer shall re-inspect the Work.

1.11 FINAL ADJUSTMENT OF ACCOUNTS

A. Submit a final statement of accounting to the Engineer at least 7 days prior to final Application for Payment.

B. Statement shall reflect all adjustments to the Contract amount.
   1. The original Contract amount.
   2. Additions and deductions resulting from:
      a. Change Orders.
      b. Units installed and unit prices.
      c. Set-offs for uncorrected or incomplete Work.
      d. Set-offs for liquidated damages.
      e. Set-offs for reinspection payments.
      f. Extended engineering and/or inspection services and inspection overtime.
      g. Excessive shop drawings review cost by the Engineer.
      h. Other adjustments.
   3. Total Contract amount, as adjusted.
   4. Previous payments.
   5. Remaining payment due.

C. Engineer will prepare a final Change Order reflecting approved adjustments to the Contract amount which were not previously made by Change Orders.

1.12 FINAL APPLICATION FOR PAYMENT

A. Contractor shall submit the final Application for Payment reflecting the agreed upon information provided in the final statement of accounting.

PART 2 PRODUCTS (NOT USED)

PART 3 EXECUTION (NOT USED)

END OF SECTION

SECTION 260500
COMMON WORK RESULTS FOR ELECTRICAL

PART 1 – GENERAL

1.01 SUMMARY

A. Section includes:

1. General requirements applicable to all Electrical Work.
2. General requirements for electrical submittals.

B. Related sections:
1. Section 01 33 00 - Submittal Procedures.
2. Section 01 77 00 - Closeout Procedures.
3. Section 26 05 03 - Utility Coordination.
4. Section 26 05 33 - Conduits.
5. Section 26 05 53 - Identification for Electrical Systems.
6. Section 26 08 50 - Field Electrical Acceptance Tests.

C. Interfaces to equipment, instruments, and other components:
1. The Drawings, Specifications, and overall design are based on preliminary information furnished by various equipment manufacturers which identify a minimum scope of supply from the manufacturers. This information pertains to, but is not limited to, instruments, control devices, electrical equipment, packaged mechanical systems, and control equipment provided with mechanical systems.
2. Provide all material and labor needed to install the actual equipment furnished, and include all costs to add any additional conduit, wiring, terminals, or other electrical hardware to the Work, which may be necessary to make a complete, functional installation based on the actual equipment furnished:
   a. Make all changes necessary to meet the manufacturer's wiring requirements.
3. Submit all such changes and additions to the Engineer for acceptance.
4. Review the complete set of Drawings and Specifications in order to ensure that all items related to the electrical power and control systems are completely accounted for. Include any such items that appear on the Drawings or in the Specifications from another discipline in the scope of Work:
   a. If a conflict between Drawings and Specifications is discovered, refer conflict to the Engineer as soon as possible for resolution.
5. Loop drawings:
   a. Provide all electrical information required in the preparation of loop drawings including, but not limited to:
      1) Conduit numbers and associated signal(s) contained within each conduit.
      2) Wire numbers.
      3) Equipment terminal numbers.
      4) Junction boxes and signal(s) contained within each junction box.
      5) Equipment power sources, and associated circuit numbers.
      6) As-built drawings detailing wiring.

D. All electrical equipment and systems for the entire Project must comply with the requirements of the Electrical Specifications, whether referenced in the individual Equipment Specifications or not:
1. The requirements of the Electrical Specifications apply to all Electrical Work specified in other sections.
2. Inform all vendors supplying electrical equipment or systems of the requirements of the Electrical Specifications.
3. Owner is not responsible for any additional costs due to the failure of Contractor to notify all subcontractors and suppliers of the Electrical Specifications requirements.

E. Contract Documents:

1. General:
    a. The Drawings and Specifications are complementary and are to be used together in order to fully describe the Work.
2. Specifications:
    a. The General and Supplementary Conditions of the Contract Documents govern the Work.
    b. These requirements are in addition to all General Requirements.
3. Contract Drawings:
    a. The Electrical Drawings show desired locations, arrangements, and components of the Electrical Work in a diagrammatic manner.
    b. Locations of equipment, control devices, instruments, boxes, panels, etc. are approximate only; exercise professional judgment in executing the Work to ensure the best possible installation:
        1) The equipment locations and dimensions indicated on the Drawings are approximate. Use the shop drawings to determine the proper layout, foundation, and pad requirements, etc. for final installation. Coordinate with all subcontractors to ensure that all electrical equipment is compatible with other equipment and space requirements. Make changes required to accommodate differences in equipment dimensions.
        2) The Contractor has the freedom to select any of the named manufacturers identified in the individual specification sections, if noted; however, the Engineer has designed the spatial equipment layout based upon a single manufacturer and has not confirmed that every named manufacturer's equipment fits in the allotted space. It is the Contractor's responsibility to ensure that the equipment being furnished fits within the defined space.
    c. Installation details:
        1) The Contract Drawings include typical installation details the Contractor is to use to complete the Electrical Work. For cases where a typical detail does not apply, develop installation details that may be necessary for completing the Work, and submit these details for review by the Engineer.
        2) Not all typical installation details are referenced within the Drawing set. Apply and use typical details where appropriate.
    d. Schematic diagrams:
        1) All controls are shown de-energized.
        2) Schematic diagrams show control function only. Incorporate other necessary functions for proper operation and protection of the system.
        3) Add slave relays, where required, to provide all necessary contacts for the control system or where needed to function as interposing relays for control voltage coordination, equipment coordination, or control system voltage drop considerations.
        4) Mount all devices shown on motor controller schematic diagrams in the controller compartment enclosure, unless otherwise noted or indicated.
        5) Schematic diagrams are to be used in conjunction with the descriptive operating sequences in the Contract Documents. Combine all information and furnish a coordinated and fully functional control system.

F. Alternates/Alternatives:
    1. In accordance with Owner's front end bid documents.

G. Changes and change orders:
    1. In accordance with Owner's front end bid documents.

1.02 REFERENCES

A. Code compliance:

1. The publications are referred to in the text by the basic designation only. The latest edition accepted by the Authority Having Jurisdiction of referenced publications in effect at the time of the bid governs.
2. The standards listed are hereby incorporated into this Section.
    a. American National Standards Institute (ANSI).
    b. American Society of Civil Engineers (ASCE):
        1) ASCE 7 - Minimum Design Loads for Buildings and Other Structures.
    c. ASTM International (ASTM).
    d. Illuminating Engineering Society (IES).
    e. Institute of Electrical and Electronics Engineers (IEEE).
    f. Insulated Cable Engineers Association (ICEA).
    g. International Code Council (ICC).
        1) International Code Council Evaluation Service (ICC-ES).
            (a) AC 156 – Acceptance Criteria for Seismic Certification by Shake Table Testing of Non-Structural Components (ICC-ES AC 156).
    h. International Society of Automation (ISA).
    i. National Electrical Manufacturers Association (NEMA):
        1) 250 - Enclosures for Electrical Equipment (1000 V Maximum).
    j. National Fire Protection Association (NFPA):
        1) 70 - National Electrical Code (NEC).
    k. National Institute of Standards and Technology (NIST).
    l. Underwriters' Laboratories, Inc. (UL).

B. Compliance with laws and regulations:
    1. In accordance with Owner’s front end bid documents.

1.03 DEFINITIONS

A. Definitions of terms and other electrical and instrumentation considerations as set forth by:
    1. IEEE.
    2. NETA.
    3. IES.
    4. ISA.
    5. NEC.
    6. NEMA.
    7. NFPA.
    8. NIST.

B. Specific definitions:
    1. FAT: Factory acceptance test.
    2. ICSC: Instrumentation and controls subcontractor.
    3. LCP: Local control panel: Operator interface panel that may contain an HMI, pilot type control devices, operator interface devices, control relays, etc. and does not contain a PLC or RIO.
    4. PCM: Process control module: An enclosure containing any of the following devices: PLC, RTU, or RIO.
    5. PCIS: Process control and instrumentation system.
    6. RTU: Remote telemetry unit: A controller typically consisting of a PLC, and a means for remote communications. The remote communications devices typically are radios, modems, etc.
    7. Space: That portion of the switchgear, motor control center, panelboard, switchboard or control panel that does not physically contain a device but is capable of accepting a device with no modifications to the equipment, i.e., provide all standoffs, bus, and hardware, as part of the space.
    8. Spare: That portion of the switchgear, motor control center, panelboard, switchboard or control panel that physically contains a device with no load connections to be made.

9. VCP: Vendor control panel: Control panels that are furnished with particular equipment by a vendor other than the ICSC. These panels may contain PLCs, RIO, OIT, HMI, etc.
10. Unequipped space: That portion of the switchgear, motor control center, panelboard, switchboard or control panel that does not physically contain a device, standoff, bus, hardware, or other equipment.

1.04 SYSTEM DESCRIPTION

A. General requirements:
1. The Work includes everything necessary for and incidental to executing and completing the Electrical Work indicated on the Drawings and specified in the Specifications and reasonably inferable there from:
   a. The Electrical Drawings are schematic in nature; use the Structural, Architectural, Mechanical, and Civil Drawings for all dimensions and scaling purposes.
2. It is the intent of these Specifications that the entire electrical power, instrumentation, and control system be complete and operable. Provide all necessary material and labor for the complete system from source of power to final utilization equipment, including all connections, testing, calibration of equipment furnished by others as well as equipment furnished by the Contractor, whether or not specifically mentioned but which are necessary for successful operation.
3. Provide all Electrical Work, including conduit, field wiring, and connections by the electrical subcontractor under the provisions of the Electrical Specifications for all aspects of the Work.
4. Coordinate all aspects of the Work with the electrical subcontractor and other subcontractors before bidding in order to ensure that all costs associated with a complete installation are included. The Owner is not responsible for any change orders due to lack of coordination of the Work between the Contractor, the electrical subcontractor, the other subcontractors or suppliers.
5. Provide all trenching, forming, rebar, concrete, back filling, hard surface removal and replacement, for all items associated with the Electrical Work and installation:
   a. As specified in the Contract Documents.
6. Defective work:
   a. In accordance with Owner's front end bid documents.
7. Utility coordination: Coordinate with the electric utility as required.
   a. See Section 26 05 03.

1.05 SUBMITTALS

A. Furnish submittals as specified in Section 01 33 00 and this Section.

B. General:
1. Instruct all equipment suppliers of submittals and operation and maintenance manuals of the requirements in this Section.
2. Furnish the submittals required by each section in the Electrical Specifications.
3. Adhere to the wiring numbering scheme specified in Section 26 05 53 throughout the Project:
   a. Uniquely number each wire.
   b. Wire numbers must appear on all Equipment Drawings.
4. Use equipment and instrument tags, as indicated on the Drawings, for all submittals.

C. Seismic requirements:
1. Provide electrical equipment with construction and anchorage to supporting structures designed to resist site seismic loads based on the seismic design criteria per the Manufacturer's instructions.
2. Exemptions: A "statement of seismic qualification" and a "special seismic certification" are not required for the following equipment:
   a. Temporary or moveable equipment.
   b. Equipment anchored to the structure and having a total weight of 20 pounds or less.

c. Distribution equipment anchored to the structure and having a total unit weight of 3 pounds per linear foot, or less.

D. Operation and maintenance manuals:
1. Furnish the Engineer with a complete set of written operation and maintenance manuals 8 weeks before Functional Acceptance Testing.

E. Material and equipment schedules:
1. Furnish a complete schedule and/or matrix of all materials, equipment, apparatus, and luminaries that are proposed for use:
a. Include sizes, names of manufacturers, catalog numbers, and such other information required to identify the items.

F. Schedule of values:
1. In addition to completing all items referred to in the schedule of values, submit per unit material and labor costs used in developing the final bid for the electrical system, for the express purpose of pricing and cost justification for any proposed change orders. In addition to the items shown on the schedule of values, provide per unit material and labor costs for conduit and wire installation for specific types, sizes, and locations as indicated on the Drawings and Conduit Schedule. It is the responsibility of the electrical subcontractor to prove to the Engineer's satisfaction that said per unit costs were used in the development of the final Bid amount.

G. Record Documents:
1. In accordance with Owner's front end bid documents.

H. Test reports:
1. As specified in Section 01 33 00.
2. Additional requirements for field acceptance test reports are specified in Section 26 08 50.

I. Calculations:
1. Where required by specific Electrical Specifications:
a. Because these calculations are being provided by a registered professional engineer, they will be reviewed for form, format, and content but will not be reviewed for accuracy and calculation means.

1.06 QUALITY ASSURANCE

A. Furnish all equipment listed by and bearing the label of UL or of an independent testing laboratory acceptable to the Engineer and the Authority Having Jurisdiction.

1.07 DELIVERY, STORAGE, AND HANDLING

A. In accordance with Owner's front end bid documents and per Manufacturer's instructions.

1.08 PROJECT OR SITE CONDITIONS

A. Site conditions:
1. Provide an electrical, instrumentation and control system, including all equipment, raceways, and any other components required for a complete installation that meets the environmental conditions for the Site as specified in the General Requirements and below.
2. Altitude, temperature and humidity:
a. Provide all electrical components and equipment fully rated for continuous operation at this altitude, with no additional derating factors applied.
b. Provide additional temperature conditioning equipment to maintain all equipment in non-conditioned spaces subject to these ambient temperatures, with a band of 10 degrees Fahrenheit above the minimum operating temperature and 10 degrees Fahrenheit below maximum operating temperature, as determined by the equipment manufacturer's guidelines:
1) Provide all power conduits wiring for these devices (e.g. heaters, fans, etc.) whether indicated on the Drawings or not.

B. Provide enclosures for electrical, instrumentation and control equipment, regardless of supplier or subcontractor furnishing the equipment, that meet the requirements outlined in NEMA Standard 250 for the following types of enclosures:
   1. NEMA Type 1: Intended for indoor use, primarily to provide a degree of protection from accidental contact with energized parts or equipment.
   2. NEMA Type 3R: Intended for outdoor use, to provide a degree of protection against ingress of solid foreign objects (falling dirt), and from the ingress of water (rain, sleet, snow).
   3. NEMA Type 4: Intended for indoor or outdoor use, primarily to protect equipment from exposure to windblown dust and rain, splashing or hose directed water, ice formation and freezing.
   4. NEMA Type 4X: Made from corrosion resistant materials (fiberglass reinforced plastic, 316 stainless steel or equal) and are intended for indoor or outdoor use, primarily to protect equipment from exposure to windblown dust and rain, splashing or hose directed water, ice formation and freezing, and corrosion.
   5. NEMA Type 12: Intended for indoor use, primarily to provide a degree of protection from dust, falling dirt and dripping non-corrosive liquids.

1.09 SEQUENCING (NOT USED)

1.10 SCHEDULING

A. General:
   1. As specified in accordance with the Owner's front end bid documents.
   2. Testing requirements are specified in Section 26 08 50 and other sections.

B. Pre-submittal conference:
   1. Before producing any submittals, schedule a pre-submittal conference for the purposes of reviewing the entire Project, equipment, control philosophy, schedules, and submittal requirements.

1.11 WARRANTY

A. Warrant the Electrical Work as specified in in accordance with the Owner's front end bid documents.
   1. Provide additional warranty as specified in the individual Electrical Specifications.

1.12 SYSTEM START-UP

A. Replace or modify equipment, software, and materials that do not achieve design requirements after installation in order to attain compliance with the design requirements:
   1. Following replacement or modification, retest the system and perform additional testing to place the complete system in satisfactory operation and obtain compliance acceptance from the Engineer.

1.13 OWNER'S INSTRUCTIONS (NOT USED)

1.14 MAINTENANCE

A. Before Substantial Completion, perform all maintenance activities required by any sections of the Specifications including any calibrations, final adjustments, component replacements or other routine service required before placing equipment or systems in service.

B. Furnish all spare parts as required by other sections of the Specifications.

PART 2 – PRODUCTS

2.01 MANUFACTURERS

A. Provide similar items of same manufacturer throughout the electrical and instrumentation portion of the Project.

B. Allowable manufacturers are specified in individual Electrical Specifications.

2.02 EXISTING PRODUCTS (NOT USED)

2.03 MATERIALS

A. Furnish all materials under this Contract that are new, free from defects, and standard products produced by manufacturers regularly engaged in the production of these products and that bear all approvals and labels as required by the Specifications.

B. Provide materials complying with the applicable industrial standards.

C. Stainless steel:
   1. Where stainless steel is indicated or used for any portion of the Electrical Work, provide a non-magnetic, corrosion-resistant alloy, ANSI Type 316, satin finish.
   2. Provide exposed screws of the same alloys.
   3. Provide finished material free of any burrs or sharp edges.
   4. Use only stainless steel hardware, when chemically compatible, in all areas that are or could be in contact with corrosive chemicals.
   5. Use stainless steel hardware, when chemically compatible, in all chemical areas or areas requiring NEMA Type 4X construction.
   6. Do not use stainless steel in any area containing chlorine, gas or solution, chlorine products or ferric chloride.

2.04 MANUFACTURED UNITS (NOT USED)

2.05 EQUIPMENT (NOT USED)

2.06 COMPONENTS (NOT USED)

2.07 ACCESSORIES (NOT USED)

2.08 MIXES (NOT USED)

2.09 FABRICATION (NOT USED)

2.10 FINISHES (NOT USED)

2.11 SOURCE QUALITY CONTROL

A. Provide all equipment that is new, free from defects, and standard products produced by manufacturers regularly engaged in the production of these products.

PART 3 – EXECUTION

3.01 EXAMINATION

A. It is the electrical subcontractor's responsibility to be fully familiar with the existing conditions and local requirements and regulations.

B. Comply with pre-bid conference requirements as specified in in accordance with the Owner’s front end bid documents.

C. Review the site conditions and examine all shop drawings for the various items of equipment in order to determine exact routing and final terminations for all wiring and cables.

3.02 PREPARATION (NOT USED)

3.03 INSTALLATION

A. Equipment locations shown on Electrical Drawings may change due to variations in equipment size or minor changes made by others during construction:
   1. Verify all dimensions indicated on the Drawings:
      a. Actual field conditions govern all final installed locations, distances, and levels.
   2. Review all Contract Documents and approved equipment shop drawings and coordinate Work as necessary to adjust to all conditions that arise due to such changes.
   3. Make minor changes in location of equipment before rough in, as directed by the Owner or Engineer.
   4. Provide a complete electrical system:

a. Install all extra conduits, cables, and interfaces as may be necessary to provide a complete and operating electrical system.

B. Install the equipment in accordance with the accepted installation instructions and anchorage details to meet the seismic and wind load requirements at the Project site.

C. Cutting and patching:
1. Perform all cutting, patching, channeling, core drilling, and fitting required for the Electrical Work, except as otherwise directed:
   a. Secure the permission of the Engineer before performing any operation likely to affect the strength of a structural member such as drilling, cutting or piercing:
      1) Before cutting, channeling, or core drilling any surface, ensure that no penetration of any other systems will be made:
         (a) Verify that area is clear and free of conduits, cables, piping, ductwork, post-tensioning cables, etc.
         (b) Use tone-locate system or X-ray to ensure that area is clear of obstructions.
   b. Review the complete Drawing set to ensure that there are no conflicts or coordination problems before cutting, channeling, or core drilling any surface.
2. Perform all patching to the same quality and appearance as the original work. Employ the proper tradesmen to secure the desired results. Seal around all conduits, wires, and cables penetrating walls, ceilings, and floors in all locations with a fire stop material, typically:
   a. 3M: CP 25WB+: Caulk.
   b. 3M: Fire Barrier: Putty.
3. Use the installation details indicated on the Drawings as a guide for acceptable sealing methods.

D. Install all conduits and equipment in such a manner as to avoid all obstructions and to preserve headroom and keep openings and passageways clear:
1. Install all conduits and equipment in accordance with working space requirements in accordance with the NEC.
   a. This includes any panel, disconnect switch or other equipment that can be energized while open exposing live parts regardless of whether it is likely to require examination or has serviceable parts.
2. Where the Drawings do not show dimensions for locating equipment, install equipment in the approximate locations indicated on the Drawings.
   a. Adjust equipment locations as necessary to avoid any obstruction or interferences.
3. Where an obstruction interferes with equipment operation or safe access, relocate the equipment.
4. Where the Drawings do not indicate the exact mounting and/or supporting method to be used, use materials and methods similar to the mounting details indicated on the Drawings.

E. Earthwork and concrete:
1. Install all trenching, shoring, concrete, backfilling, grading and resurfacing associated with the Electrical Work:
   a. Requirements as specified in the Contract Documents.

F. Terminations:
1. Provide and terminate all conductors required to interconnect power, controls, instruments, panels, and all other equipment.

G. Miscellaneous installation requirements:
1. In case of interference between electrical equipment indicated on the Drawings and the other equipment, notify the Engineer.
2. Location of manholes and pullboxes indicated on the Drawings are approximate. Coordinate exact location of manholes and pullboxes with Mechanical and Civil Work.

3. Provide additional manholes or pullboxes to those shown where they are required to make a workable installation.

H. Labeling:
1. Provide all nameplates and labels as specified in Sections 26 05 53.

I. Equipment tie-downs:
1. Anchor all instruments, control panels, and equipment by methods that comply with seismic and wind bracing criteria, which apply to the Site.
2. All control panels must be permanently mounted and tied down to structures in accordance with the Project seismic criteria.

3.04 ERECTION, INSTALLATION, APPLICATION, CONSTRUCTION (NOT USED)

3.05 REPAIR/RESTORATION (NOT USED)

3.06 RE-INSTALLATION (NOT USED)

3.07 COMMISSIONING

A. For Owner and Engineer witnessed FAT:
1. Contractor is responsible for the Owner's and Engineer's costs associated with FAT as specified in other sections.

B. Owner training:
1. In accordance with Owner's front end bid documents and in this Section.

C. Source testing (FAT):
1. Provide source testing and owner training on electrical equipment as defined below:
a. 26 32 14 - Single Diesel Fueled Engine Generator, Non-Witnessed, Owner Training requirements: 4 hrs per session for Maintenance, 4 hrs per session for Operation

3.08 FIELD QUALITY CONTROL

A. Inspection:
1. Allow for inspection of electrical system installation as specified in this section.
2. Provide any assistance necessary to support inspection activities.
3. Engineer inspections may include, but are not limited to, the following:
a. Inspect equipment and materials for physical damage.
b. Inspect installation for compliance with the Drawings and Specifications.
c. Inspect installation for obstructions and adequate clearances around equipment.
d. Inspect equipment installation for proper leveling, alignment, anchorage, and assembly.
e. Inspect equipment nameplate data to verify compliance with design requirements.
f. Inspect raceway installation for quality workmanship and adequate support.
g. Inspect cable terminations.
4. Inspection activities conducted during construction do not satisfy inspection or testing requirements specified in Section 26 08 50.

B. Field acceptance testing (Functional Testing):
1. Notify the Engineer when the Electrical Work is ready for field acceptance testing.
2. Perform the field acceptance tests as specified in Section 26 08 50.
3. Record results of the required tests along with the date of test:
a. Use conduit identification numbers to indicate portion of circuit tested.

C. Workmanship:
1. Leave wiring in panels, manholes, boxes, and other locations neat, clean, and organized:
a. Neatly coil and label spare wiring lengths.
b. Shorten, re-terminate, and re-label excessive used as well as spare wire and cable lengths, as determined by the Engineer.

3.09 ADJUSTING (NOT USED)

3.10 CLEANING

A. As specified in Section 01 77 00.

B. Remove all foreign material and restore all damaged finishes to the satisfaction of the Engineer and Owner.

C. Clean and vacuum all enclosures to remove all metal filings, surplus insulation and any visible dirt, dust or other matter before energization of the equipment or system start-up.

D. As specified in other sections of the Contract Documents.

3.11 PROTECTION

A. Protect all Work from damage or degradation until Substantial Completion.

B. Maintain all surfaces to be painted in a clean and smooth condition.

3.12 SCHEDULES (NOT USED)

END OF SECTION

SECTION 260503
UTILITY COORDINATION

PART 1GENERAL

1.01 SUMMARY

A. Section includes:

1. Coordination with the utility companies to provide service.
2. Contractor's responsibilities for connecting to utilities and providing utility service to the facilities.
3. Descriptions of utility services required.

B. Related sections:
1. Section 01 33 01 - Submittals.
2. Section 26 05 00 - Common Work Results for Electrical.

1.02 REFERENCES

A. As specified in Section 26 05 00.

1.03 DEFINITIONS

A. As specified in Section 26 05 00.

B. Utility contacts:
1. SoCal Edison:
   a. Name: Marisa Melendez .
   b. Utility: SoCal Edison (SCE) .
   c. Service Request No.: 3924654 .
   d. Phone number: N/A .
   e. E-mail: Marisa.Melendez@sce.com .

1.04 SYSTEM DESCRIPTION

A. Electrical service:
1. Provide all Work and materials and bear all costs for providing temporary construction power and the permanent electrical service, including but not limited to:
   a. All Work and materials not provided by the electric utility.
   b. All permits and fees required by the electric utility.
2. Provide electrical ducts, raceways, conductors and connections indicated on the Drawings, and all other Work and materials required for a complete electrical service, including but not limited to the following:
   a. Electrical primary and secondary conduits and conductors from the point of electric utility connection to the service entrance equipment.
   b. Metering conduits from the instrument transformers to the meter.
   c. All work shown on the utility plans.

B. General:
1. Coordinate and obtain inspections and final installation approval from the serving utilities and other authorities having jurisdiction.

1.05 SUBMITTALS

A. Furnish submittals as specified in Sections 01 33 01 and 26 05 00.

B. Certification:
1. Submit certification that the intended installation has been coordinated with the utility companies.
2. Include a narrative description of the utility's requirements and points of connection, names and telephone numbers for contacts at the utilities.

1.06 QUALITY ASSURANCE

A. As specified in Section 26 05 00.

B. Materials and equipment used in performance of Electrical Work shall be listed or labeled by UL, or other equivalent recognized independent testing laboratory, for the class of service intended.

1.07 DELIVERY, STORAGE, AND HANDLING (NOT USED)

1.08 PROJECT OR SITE CONDITIONS

A. As specified in Section 26 05 00.

1.09 SEQUENCING (NOT USED)

1.10 SCHEDULING

A. General:
   1. Before start of Site Work, make arrangements for electrical service as required.

B. Electrical systems:
   1. Before bidding, the electrical contractor shall coordinate with the Owner for most up to date utilities plans to determine the Work and materials that will be required from the Contractor, and all fees and permits that will be required, so that all utility systems furnished by the Contractor will be included in the bid.
   2. Before commencing Work, coordinate electric service entrance requirements with local electric utility to assure that the installation will be complete as specified in these Contract Documents:
      a. Ensure power transformer size, electrical characteristics, and location are consistent with the design and service voltage provided by the electric utility coordinated with other trades.
      b. Arrange for utility revenue meter.
      c. Coordinate installation of metering CTs and PTs furnished by the electric utility.
      d. Pay any charges required by the electric utility for connection and turn-on.

C. Before commencing Site Work, coordinate underground conduit installations with other Work to eliminate conflicts and avoid interferences with other underground systems.

1.11 WARRANTY

A. As specified in Section 26 05 00.

1.12 SYSTEM START-UP

A. As specified in Section 26 05 00.

1.13 OWNER'S INSTRUCTIONS (NOT USED)

1.14 MAINTENANCE (NOT USED)

PART 2PRODUCTS

1.01 MANUFACTURERS (NOT USED)

1.02 EXISTING PRODUCTS (NOT USED)

1.03 MATERIALS

A. Furnish materials in accordance with the applicable requirements of the utilities and as specified in these Specifications.

1.04 MANUFACTURED UNITS (NOT USED)

1.05 EQUIPMENT

A. Furnish equipment in accordance with the applicable requirements of the utilities and as specified in these Specifications.

1.06 COMPONENTS (NOT USED)

1.07 ACCESSORIES (NOT USED)

1.08 MIXES (NOT USED)

1.09 FABRICATION (NOT USED)

2.10 FINISHES (NOT USED)

2.11 SOURCE QUALITY CONTROL (NOT USED)

PART 3EXECUTION

3.01 EXAMINATION (NOT USED)

3.02 PREPARATION (NOT USED)

3.03 INSTALLATION

A. As specified in Section 26 05 00.

3.04 ERECTION, INSTALLATION, APPLICATION, CONSTRUCTION (NOT USED)

3.05 REPAIR/RESTORATION (NOT USED)

3.06 RE-INSTALLATION (NOT USED)

3.07 COMMISSIONING

A. As specified in Section 26 05 00.

3.08 FIELD QUALITY CONTROL

A. As specified in Section 26 05 00.

3.09 ADJUSTING (NOT USED)

3.10 CLEANING

A. As specified in Section 26 05 00.

3.11 PROTECTION

A. As specified in Section 26 05 00.

3.12 SCHEDULES (NOT USED)

END OF SECTION

SECTION 260521
LOW VOLTAGE WIRE CONNECTIONS

PART 1 – GENERAL

1.01 SUMMARY

A. Section includes:

1. Wire connecting devices.
2. Terminations.
3. Splices.

B. Related sections:
1. Section 01 33 00 - Submittal Procedures.
2. Section 26 05 00 - Common Work Results for Electrical.
3. Section 26 05 19 - 600-Volt or Less Wires and Cables.
4. Section 26 08 50 - Field Electrical Acceptance Tests.

1.02 REFERENCES

A. As specified in Section 26 05 00.

B. ASTM International (ASTM):
1. D3005 – Standard Specification for Low-Temperature Resistant Vinyl Chloride Plastic Pressure-Sensitive Electrical Insulating Tape.

C. CSA International (CSA):
1. C22.2 - No.197-M1983 (R2208) - PVC Insulating Tape.

D. Underwriters Laboratories, Inc. (UL):
1. 510 - Standard for Polyvinyl Chloride, Polyethylene, and Rubber Insulating Tape.

1.03 DEFINITIONS

A. As specified in Section 26 05 00.

1.04 SYSTEM DESCRIPTION

A. Provide a complete system of wiring connectors, terminators, fittings, etc. for a complete wiring system suitable for the cables and conductors used.

1.05 SUBMITTALS

A. Furnish submittals as specified in Sections 01 33 00 and 26 05 00.

B. Product data:
1. Catalog cut sheets.
2. Installation instructions.

1.06 QUALITY ASSURANCE

A. As specified in Section 26 05 00.

B. All materials shall be UL listed.

1.07 DELIVERY, STORAGE, AND HANDLING

A. As specified in Section 26 05 00.

1.08 PROJECT OR SITE CONDITIONS

A. As specified in Section 26 05 00.

1.09 SEQUENCING (NOT USED)

1.10 SCHEDULING (NOT USED)

1.11 WARRANTY

A. As specified in Section 26 05 00.

1.12 SYSTEM START-UP

A. As specified in Section 26 05 00.

1.13 OWNER'S INSTRUCTIONS (NOT USED)

1.14 MAINTENANCE (NOT USED)

PART 2 – PRODUCTS

2.01 MANUFACTURERS

A. Manufacturers for each type of technology are specified with the equipment in this Section.

2.02 EXISTING PRODUCTS (NOT USED)

2.03 MATERIALS (NOT USED)

2.04 MANUFACTURED UNITS (NOT USED)

2.05 EQUIPMENT

A. Control connections:
   1. Use insulated ring type wire terminators for connections to all screw terminals:
      a. With chamfered/funneled terminal barrel entry.
      b. Deep internal serrations.
      c. Long barrel design to reduce electrical resistance and increased insulator-barrel surface area to ensure that the insulator remains in contact with the barrel.
      d. Electroplated-tin copper conductor.
      e. Manufacturer: The following or equal:
         1) Thomas and Betts, Sta-Kon.
   2. For process equipment connections work from manufacturer's drawings.

B. Joints, taps, and connections:
   1. 600-volt conductors:
      a. Use solderless connectors.
      b. Use only plated copper alloy connectors or lugs:
         1) Aluminum connectors or lugs are not acceptable for copper conductors.
      c. For wire Number 10 AWG and smaller use compression splice caps, with insulating caps:
         1) Manufacturer: The following or equal:
            (a) Buchanan 2006S or 2011S, with 2007 or 2014 insulating caps.
      d. For wire Number 8 AWG and larger, use heavy duty copper compression connectors:
         1) Manufacturer: One of the following or equal:
            (a) Burndy.
            (b) Thomas and Betts.
      e. Heat shrink tubing:
         1) Suitable for indoors, outdoors, overhead, direct burial or submerged applications.
         2) Minimum shrink ratio: 4 to 1.
         3) Continuous operating temperature: -55 degrees Celsius to 110 degrees Celsius.
         4) Internally applied adhesive sealant.
         5) Cross-linked polyolefin:
            (a) Manufacturers, one of the following or equal:
               (1) 3M ITCSN.
               (2) Thomas & Betts Shrink-Kon.

C. Insulating tape:
   1. General purpose insulating tape:
      a. Minimum 7 mil vinyl tape.
      b. Suitable for application in an ambient of -18 degrees Celsius (0 degrees Fahrenheit).
      c. Operating range up to 105 degrees Celsius (220 degrees Fahrenheit).

d. Flame retardant, hot- and cold- weather resistant, UV resistant.
e. For use as a primary insulation for wire cable splices up to 600 VAC.
f. Meeting and complying with:
1) ASTM D3005 Type I
2) UL 510.
3) CSA C22.2.
g. Manufacturer: The following or equal:
1) 3M - Scotch Number Super 33+.

2. General-purpose color-coding tape:
a. Minimum 7 mil vinyl tape.
b. Suitable for application on PVC and polyethylene jacketed cables.
c. For use indoors and outdoors in weather protected enclosures.
d. Available with the following colors:
1) Red.
2) Yellow.
3) Blue.
4) Brown.
5) Gray.
6) White.
7) Green.
8) Orange.
9) Violet.
e. For use as phase identification, marking, insulating, and harnessing.
f. Meeting and complying with:
1) UL 510.
2) CSA C22.2.
g. Manufacturer the following or equal:
1) 3M - Scotch Number 35.

2.06 COMPONENTS (NOT USED)

2.07 ACCESSORIES (NOT USED)

2.08 MIXES (NOT USED)

2.09 FABRICATION (NOT USED)

2.10 FINISHES (NOT USED)

2.11 SOURCE QUALITY CONTROL (NOT USED)

PART 3 – EXECUTION

3.01 EXAMINATION (NOT USED)

3.02 PREPARATION (NOT USED)

3.03 INSTALLATION

A. As specified in Section 26 05 00.

B. Load connections:
1. Connect loads to the circuits as indicated. Color-code all branch circuits as specified in Section 26 05 19.

C. Zero to 600-volt systems:
1. Make all connections with the proper tool and die as specified by the device manufacturer.
2. Use only tooling and dies manufactured by the device manufacturer.
3. Insulate all connections and splices with Scotch 33+ tape and Scotchfill, or pre-molded plastic covers, or heat shrink tubing and caps.
4. Number all power and control wires before termination.

D. Motor connections (600 volts and below):

1. Terminate wires with compression type ring lugs at motors.
2. Connection at both the motor leads and the machine wires shall have ring type compression lugs.
3. Cover bolted connectors with a heat shrinkable, cross-linked polyolefin material formed as a single opening boot:
    a. In damp and wet locations, use a complete kit containing mastic that shall seal out moisture and contamination.
    b. Shrink cap with low heat as recommended by manufacturer.
4. Wire markers shall be readable after boot installation.
5. Manufacturer: The following or equal:
    a. Raychem MCK.

3.04 ERECTION, INSTALLATION, APPLICATION, CONSTRUCTION (NOT USED)

3.05 REPAIR/RESTORATION (NOT USED)

3.06 RE-INSTALLATION (NOT USED)

3.07 FIELD QUALITY CONTROL

A. As specified in Section 26 05 00.

3.08 ADJUSTING (NOT USED)

3.09 CLEANING (NOT USED)

3.10 PROTECTION

A. As specified in Section 26 05 00.

3.11 SCHEDULES (NOT USED)

END OF SECTION

SECTION 260526
GROUNDING AND BONDING

PART 1 – GENERAL

1.01 SUMMARY

A. Section includes:

1. Grounding materials and requirements.

B. Related sections:
1. Section 01 33 00 - Submittal Procedures.
2. Section 26 05 00 - Common Work Results for Electrical.
3. Section 26 08 50 - Field Electrical Acceptance Tests.

1.02 REFERENCES

A. As specified in Section 26 05 00.

B. ASTM International (ASTM):
1. B3 - Standard Specification for Soft or Annealed Copper Wire.
2. B8 - Standard Specification for Concentric-Lay-Stranded Copper Conductors, Hard, Medium-Hard, or Soft.

C. Institute of Electrical and Electronics Engineers (IEEE):
1. 81 - IEEE Guide for Measuring Earth Resistivity, Ground Impedance, and Earth Surface Potentials of a Grounding System.

D. Underwriters Laboratories, Inc. (UL):
1. 467 - Ground and Bonding Equipment.

1.03 DEFINITIONS

A. As specified in Section 26 05 00.

1.04 SYSTEM DESCRIPTION

A. Ground equipment and raceway systems so that the completed installation conforms to all applicable code requirements.

B. Provide a complete electrical grounding system as indicated on the Drawings and as specified including but not limited to:
1. Grounding electrodes.
2. Bonding jumpers.
3. Ground connections.

C. Provide bonding jumpers and wire, grounding bushings, clamps and appurtenances required for complete grounding system to bond equipment and raceways to equipment grounding conductors.

D. The ground system resistance (electrode to ground) of the completed installation, as determined by tests specified in Section 26 08 50, shall be:
1. 5 ohms or less for industrial systems.
2. 1 ohm or less for electrical buildings.

1.05 SUBMITTALS

A. Furnish submittals as specified in Sections 01 33 00 and 26 05 00.

B. Product data:
1. Catalog cut sheets.

1.06 QUALITY ASSURANCE

A. As specified in Section 26 05 00.

B. All grounding components and materials shall be UL listed and labeled.

1.07 DELIVERY, STORAGE, AND HANDLING

A. As specified in Section 26 05 00.

1.08 PROJECT/SITE CONDITIONS (NOT USED)

1.09 SEQUENCING (NOT USED)

1.10 SCHEDULING (NOT USED)

1.11 WARRANTY

A. As specified in Section 26 05 00.

1.12 SYSTEM START-UP

A. As specified in Section 26 05 00.

1.13 OWNER'S INSTRUCTIONS (NOT USED)

1.14 MAINTENANCE (NOT USED)

PART 2 – PRODUCTS

2.01 MANUFACTURERS

A. Compression connectors: One of the following or equal:
   1. FCI Burndy.
   2. Thomas & Betts.

B. Ground rods: One of the following or equal:
   1. Erico.
   2. Harger.
   3. Nehring

C. Ground cable: One of the following or equal:
   1. Nehring.
   2. Harger.
   3. Southwire.

D. Precast ground well boxes: One of the following or equal:
   1. Brooks Products.
   2. Christy Concrete Products.

2.02 EXISTING PRODUCTS (NOT USED)

2.03 MATERIALS

A. Ground rod:
   1. Minimum: 3/4-inch diameter, 10 feet long.
   2. Uniform 10 mil covering of electrolytic copper metallically bonded to a rigid steel core:
      a. The copper-to-steel bond shall be corrosion resistant.
   3. In accordance with UL 467.
   4. Sectional type joined by threaded copper alloy couplings.
   5. Fit the top of the rod with a threaded coupling and steel-driving stud.

B. Ground cable:
   1. Requirements:
      a. Soft drawn (annealed).
      b. Concentric lay, coarse stranded in accordance with ASTM B8.
      c. Bare copper in accordance with ASTM B3.
   2. Size is as indicated on the Drawings, but not less than required by the NEC.

C. Ground connectors:
   1. Products shall be listed and labeled as grounding connectors for the materials used.
   2. Above ground installations: Mechanical and/or compression type connectors.
   3. Below ground installations: Exothermic and/or compression type connectors.

4. Exothermic connections:
    a. Weld connections together using an exothermic fusion type process. Provide connections equal or larger in size than the conductors joined and with the same current carrying capacity as the largest conductor. Connections shall be Cadweld or equivalent.
5. Compression connectors:
    a. Manufactured of high copper alloy specifically for the particular grounding application.
    b. Suitable for direct burial in earth and concrete.
    c. Identifying compression die number inscription to be impressed on compression fitting.

D. Equipment grounding conductors:
1. Conductors shall be the same type and insulation as the load circuit conductors:
    a. Use 600-volt insulation for the equipment grounding conductors for medium voltage systems.
2. Size is as indicated on the Drawings, but not less than required by the NEC.

E. Grounding electrode conductors:
1. Size is as indicated on the Drawings, but not less than required by the NEC.

F. Main bonding jumpers and bonding jumpers:
1. Size is as indicated on the Drawings, but not less than required by the NEC.

2.04 MANUFACTURED UNITS (NOT USED)

2.05 EQUIPMENT (NOT USED)

2.06 COMPONENTS (NOT USED)

2.07 ACCESSORIES

A. Precast ground well boxes:
1. Minimum 10 inch interior diameter.
2. Traffic-rated cast iron cover.
3. Permanent “GROUND” marking on cover.

2.08 MIXES (NOT USED)

2.09 FABRICATION (NOT USED)

2.10 FINISHES (NOT USED)

2.11 SOURCE QUALITY CONTROL (NOT USED)

PART 3 – EXECUTION

3.01 EXAMINATION (NOT USED)

3.02 PREPARATION (NOT USED)

3.03 INSTALLATION

A. As specified in Section 26 05 00.

B. Provide a separate, green insulated, grounding conductor in each raceway independent of raceway material.
1. Provide a separate grounding conductor in each individual raceway for parallel feeders.

C. Provide a separate grounding conductor for each motor and connect at motor terminal box. Do not use bolts securing motor box to frame or cover for grounding connectors:
1. When grounding motors driven by variable frequency drives (VFD) comply with the requirements of the VFD manufacturer.

D. Provide a grounding type bushing with lug for connection of grounding conductor for conduits that originate from each motor control center section, switchboard, or panelboard:
1. Individually bond these raceways to the ground bus in the equipment.

E. Provide grounding type bushings with lugs for connection of grounding conductor at both ends of metallic conduit runs. Bond ground bushings to the grounding system.

F. Provide a green insulated wire-grounding jumper from the ground screw to a box grounding screw and, for grounding type devices, to equipment grounding conductor.

G. Interconnect the secondary switchgear, switchboard, or panelboard neutral bus to the ground bus in the secondary switchgear, switchboard, or panelboard compartment, only at service entrance point or after a transformer.

H. Duct bank ground system:
   1. Provide a bare copper grounding conductor the entire length of each duct bank, embedded in the concrete of the duct bank as indicated on the Drawings and specified in the Specifications.
   2. Bond duct bank ground conductors together where duct banks join, merge, intersect, or split.

I. Grounding at service (600 V or Less):
   1. Connect the neutral to ground only at one point within the enclosure of the first disconnecting means on the load side of the service transformer.

J. Ground connections:
   1. All connections to the ground grid system, the duct bank grounding system, equipment, ground rods, etc., shall be made using compression type grounding connectors as indicated on the Drawings, UL listed, and labeled for the application.
   2. Make ground connections in accordance with the manufacturer's instructions.
   3. Do not conceal or cover any ground connections until the Engineer or authorized representative has established and provided written confirmation that every grounding connection is as indicated on the Drawings and specified in the Specifications.

K. Grounding electrode system:
   1. Ground ring:
      a. Provide all trenching and materials necessary to install the ground ring as indicated on the Drawings.
      b. Ground ring conductor shall be in direct contact with the earth, or where embedded, concrete, of the size as indicated on the Drawings.
      c. Minimum burial depth 36 inches or as indicated on the Drawings.
      d. Re-compact disturbed soils to original density in 6-inch lifts.
   2. Ground rods:
      a. Locations as indicated on the Drawings.
      b. Length of rods forming an individual ground array shall be equal in length.
      c. Drive ground rods and install grounding conductors before construction of concrete slabs and duct banks.
      d. Pre-crimp all ground rods, as recommended by the manufacturer, before crimping connector to ground rod.
   3. Metal underground water pipe:
      a. Bond metal underground domestic water pipe to grounding electrode system.
   4. Metal frame of building or structure:
      a. Bond metal frame of building or structure to grounding electrode system.
   5. Extend grounding conductors through concrete to accessible points for grounding equipment and electrical enclosures.
   6. Where grounding conductors are not concrete-encased or direct buried, install in Schedule 40 PVC conduit for protection.
   7. Install grounding system at each structure where switchgear, motor control centers, switchboards, panelboards, panels, or other electrical equipment are installed.

L. Shield grounding:
   1. Shielded instrumentation cable shall have its shield grounded at one end only unless shop drawings indicate otherwise:

a. The grounding point shall be at the control panel or at the power source end of the signal carried by the cable.

2. Terminate the shield drain wire on a dedicated terminal block.
3. Use manufacturer's terminal block jumpers to interconnect ground terminals.
4. Connection to the panel main ground bus shall be via a green No. 12 conductor to the main ground bus for the panel.

M. Where indicated on the Drawings, install ground rods in precast ground wells.

3.04 ERECTION, INSTALLATION, APPLICATION, CONSTRUCTION (NOT USED)

3.05 REPAIR/RESTORATION (NOT USED)

3.06 RE-INSTALLATION (NOT USED)

3.07 TESTING

A. As specified in Section 26 08 50.

3.08 FIELD QUALITY CONTROL

A. As specified in Section 26 05 00.

B. Measure grounding electrode system resistance to ground in accordance with IEEE 81.

3.09 ADJUSTING

A. Under the direction of the Engineer, add additional parallel connected ground rods and/or deeper driven rods until the ground resistance measurement meets the specified resistance requirements:

1. Use of salts, water, or compounds to attain the specified ground resistance is not acceptable.

3.10 CLEANING (NOT USED)

3.11 PROTECTION

A. As specified in Section 26 05 00.

3.12 SCHEDULES (NOT USED)

END OF SECTION

SECTION 260529
HANGERS AND SUPPORTS

PART 1 – GENERAL

1.01 SUMMARY

A. Section includes:

1. Mounting and supporting electrical equipment and components.

B. Related sections:
1. Section 01 33 00 - Submittal Procedures.
2. Section 26 05 00 - Common Work Results for Electrical.

1.02 REFERENCES

A. As specified in Section 26 05 00.

B. ASTM International (ASTM):
1. A 123 - Standard Specification for Zinc (Hot-Dip Galvanized) Coatings on Iron and Steel Products.
2. A 153 - Standard Specification for Zinc Coating (Hot-Dip) on Iron and Steel Hardware.
3. A 240 – Standard Specification for Chromium and Chromium-Nickel Stainless Steel Plate, Sheet, and Strip for Pressure Vessels and for General Applications.

1.03 DEFINITIONS

A. As specified in Section 26 05 00.

1.04 SYSTEM DESCRIPTION

A. Design requirements:
1. Conform to the requirements of the Building Code.
2. Demonstrate the following using generally accepted engineering methods:
   a. That the anchors to the structure are adequate to resist the loads generated in accordance with the Building Code and equipment requirements.
   b. That the required load capacity of the anchors can be fully developed in the structural materials to which they are attached.
3. Design loading and anchoring requirements:
   a. As indicated in the Building Code unless otherwise specified.
   b. Seismic loading requirements:
      1) Freestanding or wall-hung equipment shall be anchored in place by methods that will satisfy the requirements for the seismic design specified in Section 26 05 00.
   c. Wind loading requirements:
      1) All exterior freestanding equipment shall be anchored in place by methods that will satisfy the requirements for wind design specified in Section 26 05 00.
   d. Minimum safety factor against overturning: 1.5.
   e. The foundation and structures to which hangers and supports are attached shall be capable of withstanding all anchor loads.

B. Performance requirements:
1. Hangers and supports individually and as a system shall resist all weights and code-required forces without deflections and deformations that would damage the supporting elements, the equipment supported, or the surrounding construction.

1.05 SUBMITTALS

A. Furnish submittals as specified in Sections 01 33 00 and 26 05 00.

B. Product data:
1. Supports:
   a. Materials.

b. Geometry.
c. Manufacturer.

2. Hardware:
   a. Materials.
   b. Manufacturer.

C. Shop drawings:
1. Complete dimensioned and scalable shop drawings of all supporting structures, trapezes, wall supports, etc.
2. Complete anchoring details for equipment, lighting and raceway, supporting structures, trapezes, wall supports for all equipment in excess of 200 pounds, and all freestanding supports:
   a. Stamped by a professional engineer licensed in the state where the Project is being constructed.
   b. Said submittals, by virtue of the fact that they bear the stamp of a registered engineer, will be reviewed for general consistency with the requirements specified in the Contract Documents, but not for context, accuracy, or method of calculation.
3. Include data on attachment hardware and construction methods that will satisfy the design loading and anchoring criteria.

D. Installation instructions:
1. Furnish anchorage instructions and requirements based on the seismic and wind conditions of the Site:
   a. Stamped by a professional engineer licensed in the state where the Project is being constructed.

1.06 QUALITY ASSURANCE

A. As specified in Section 26 05 00.

1.07 DELIVERY, STORAGE, AND HANDLING

A. As specified in Section 26 05 00.

1.08 PROJECT OR SITE CONDITIONS

A. As specified in Section 26 05 00.

1.09 SEQUENCING (NOT USED)

1.10 SCHEDULING (NOT USED)

1.11 WARRANTY

A. As specified in Section 26 05 00.

1.12 SYSTEM STARTUP

A. As specified in Section 26 05 00.

1.13 OWNER'S INSTRUCTIONS (NOT USED)

1.14 COMMISSIONING (NOT USED)

1.15 MAINTENANCE (NOT USED)

PART 2 – PRODUCTS

2.01 MANUFACTURERS

A. One of the following or equal:
1. Thomas & Betts.
2. Power-Strut.
3. Unistrut.
4. Cooper B-Line.
5. Robroy.
6. Aickinstrut.

2.02 EXISTING PRODUCTS (NOT USED)

2.03 MATERIALS

A. Use materials appropriate for the area as specified in Section 26 05 00.

B. Hot dip galvanized steel:
   1. Supports:
      a. In accordance with ASTM A123 or A153.
      b. Minimum zinc coating thickness of 2.5 mils.
   2. Hardware:
      a. Electro-galvanized.
      b. In accordance with ASTM A153.

C. Stainless steel:
   1. Supports:
      a. In accordance with ASTM A240.
      b. ANSI Type 316 material.
   2. Hardware:
      a. ANSI Type 316 material.

2.04 MANUFACTURED UNITS (NOT USED)

2.05 EQUIPMENT (NOT USED)

2.06 COMPONENTS (NOT USED)

2.07 ACCESSORIES

A. Anchor bolts:
   1. Indoor, Dry Locations: Anchor bolts shall be ASTM A307 galvanized steel.
   2. Outdoor, Wet or Corrosive Areas: Anchor bolts shall be Type 316 ASTM A276 stainless steel.

2.08 MIXES (NOT USED)

2.09 FABRICATION (NOT USED)

2.10 FINISHES

A. Paint and finish all supporting structures per Owner's requirements.

2.11 SOURCE QUALITY CONTROL (NOT USED)

PART 3 – EXECUTION

3.01 EXAMINATION (NOT USED)

3.02 PREPARATION (NOT USED)

3.03 INSTALLATION

A. As specified in Section 26 05 00.

B. Mount all raceways, cabinets, boxes, fixtures, instruments, and devices on Contractor-fabricated racks unless otherwise indicated on the Drawings.
   1. Provide the necessary sway bracing to keep trapeze type structures from swaying under seismic events or wind loading.

C. Brace and anchor freestanding equipment supports using methods that provide structural support based on the seismic loads and wind loads:
   1. Lateral deflection at top of supports not to exceed support height divided by 240 unless otherwise approved by the Engineer.

D. Provide fabricated steel support pedestals for wall mounted panels that weigh more than 200 pounds:
   1. Fabricate pedestals out of welded angle, tube sections, or preformed channel.
   2. If the supported equipment is a panel or cabinet, match the supported equipment in physical appearance and dimensions.

3. Provide auxiliary floor supports for transformers hung from stud walls and weighing more than 200 pounds.
4. Mount all equipment, cabinets, boxes, instruments, and devices in damp or wet locations on minimum of 7/8-inch preformed mounting channel.
    a. Mount channel vertically along the length of the device so that water or moisture may run freely behind the device.

E. Corrosion protection:
1. Isolate dissimilar metals, except where required for electrical continuity.
    a. Use neoprene washers, 9-mil polyethylene tape, or gaskets for isolation.

F. Raceway:
1. Furnish all conduit racks and trapeze structures needed to support the raceway from the structure.
    a. Group conduits and position on racks to minimize crossovers.
    b. Provide the necessary bracing to keep trapeze type structures from swaying under loads from cable installation, seismic forces, or wind forces.

G. Anchoring methods:
1. Solid concrete: Anchor bolts, anchor rods or post-installed anchors as specified herein.
2. Metal surfaces: Machine screws or bolts.
3. Hollow masonry units: Post-installed anchors as specified on drawings.

H. Recoat or seal all drilled holes, cut or scratched srufacesa with products recommended by the manufacturer.

3.04 ERECTION, INSTALLATION, APPLICATION, CONSTRUCTION (NOT USED)

3.05 REPAIR/RESTORATION (NOT USED)

3.06 RE-INSTALLATION (NOT USED)

3.07 FIELD QUALITY CONTROL

A. As specified in Section 26 05 00.

3.08 ADJUSTING (NOT USED)

3.09 CLEANING (NOT USED)

3.10 PROTECTION

A. As specified in Section 26 05 00.

3.11 SCHEDULES (NOT USED)

END OF SECTION

SECTION 260533
CONDUITS

PART 1 – GENERAL

1.01 SUMMARY

A. Section includes:
   1. Metallic conduits.
   2. Nonmetallic conduits.
   3. Conduit bodies.
   4. Conduit fittings and accessories.
   5. Conduit installation.

B. Related sections:
   1. Section 01 33 00 - Submittal Procedures.
   2. Section 26 05 00 - Common Work Results for Electrical.
   3. Section 26 05 29 - Hangers and Supports.
   4. Section 26 05 53 - Identification for Electrical Systems.

1.02 REFERENCES

A. As specified in Section 26 05 00.

B. American National Standards Institute (ANSI):
   1. C80.1 - Electrical Rigid Steel Conduit.
   2. C80.3 - Steel Electrical Metallic Tubing.
   3. C80.5 - Electrical Rigid Aluminum Conduit.
   4. C80.6 - Electrical Intermediate Metal Conduit.

C. National Electrical Manufacturer's Association (NEMA):
   1. RN-1 - Polyvinyl Chloride (PVC) Externally Coated Galvanized Rigid Steel Conduit and Intermediate Steel Conduit.
   2. TC2 - Electrical Polyvinyl Chloride (PVC) Conduit.
   3. TC3 - Polyvinyl Chloride (PVC) Fittings for Use with Rigid PVC Conduit and Tubing.
   4. TC7 - Smooth-Wall Coilable Electrical Polyethylene Conduit.
   5. TC13 - Electrical Nonmetallic Tubing.
   6. TC14 - Reinforced Thermosetting Resin Conduit (RTRC) and Fittings.

D. Underwriters Laboratories (UL):
   1. 1 - Standard for Flexible Metal Conduit.
   2. 6 - Standard for Electrical Rigid Metal Conduit - Steel.
   3. 6A - Standard for Electrical Rigid Metal Conduit - Aluminum, Red Brass, and Stainless Steel.
   4. 360 - Standard for Liquid-Tight Flexible Steel Conduit.
   5. 651 - Standard for Schedule 40 and 80 Rigid PVC Conduit and Fittings.
   6. 651B - Standard for Continuous Length HDPE Conduit.
   7. 797 - Standard for Electrical Metallic Tubing - Steel.
   8. 1242 - Standard for Electrical Intermediate Metal Conduit - Steel.
   9. 1653 - Standard for Electrical Nonmetallic Tubing.
   10. 1660 - Standard for Liquid-Tight Flexible Nonmetallic Conduit.
   11. 1684 - Standard for Reinforced Thermosetting Resin Conduit (RTRC) and Fittings.

1.03 DEFINITIONS

A. As specified in Section 26 05 00.

B. Specific definitions and abbreviations:
   1. Conduit bodies: A separate portion of a conduit system that provides access through a removable cover to the interior of the system at a junction of 2 or more conduit sections. Includes, but not limited to: shapes C, E, LB, T, X, etc.

2. Conduit fitting: An accessory that serves primarily a mechanical purpose. Includes, but not limited to: bushings, locknuts, hubs, couplings, reducers, etc.
3. GRC: Galvanized rigid steel conduit.
4. PCS: PVC coated rigid steel conduit.
5. PVC: Polyvinyl chloride rigid nonmetallic conduit.
6. LFMC: Liquid-tight flexible metal conduit.
7. NPT: National pipe thread.

1.04 SYSTEM DESCRIPTION

A. Provide conduits, conduit bodies, fittings, junction boxes and all necessary components, whether or not indicated on the Drawings, as required, to install a complete electrical raceway system.

1.05 SUBMITTALS

A. Furnish submittals as specified in Sections 01 33 00 and 26 05 00.

B. Product data:
1. Furnish complete manufacturer's catalog sheets for every type and size of conduit, fitting, conduit body, and accessories to be used on the Project.
2. Furnish complete manufacturer's recommended special tools to be used for installation if required.
3. Certified test results for PVC-coated metallic conduit showing the adhesive bond is stronger than the tensile strength of the PVC.

C. Certifications:
1. Furnish PVC-coated conduit manufacturer's certification for each installer.

D. Record Documents:
1. Incorporate all changes in conduit routing on electrical plan drawings.
2. Dimension underground and concealed conduits from building lines.

1.06 QUALITY ASSURANCE

A. As specified in Section 26 05 00.

B. All conduits, conduit bodies, and fittings shall be UL listed and labeled.

C. Every installer of PCS conduits shall be certified by the manufacturer for installation of the conduit.

1.07 DELIVERY, STORAGE, AND HANDLING

A. As specified in Section 26 05 00.

B. Do not expose nonmetallic to direct sunlight.

C. Do not store conduit in direct contact with the ground.

1.08 PROJECT OR SITE CONDITIONS

A. As specified in Section 26 05 00.

1.09 SEQUENCING

A. Before installing any conduit or locating any device box:
1. Examine the complete set of Drawings and Specifications, and all applicable shop drawings.
2. Verify all dimensions and space requirements and make any minor adjustments to the conduit system as required to avoid conflicts with the building structure, other equipment, or the work of other trades.

1.10 SCHEDULING (NOT USED)

1.11 WARRANTY

A. As specified in Section 26 05 00.

1.12 SYSTEM START-UP

A. As specified in Section 26 05 00.

1.13 OWNER'S INSTRUCTIONS (NOT USED)

1.14 MAINTENANCE (NOT USED)

PART 2 – PRODUCTS

2.01 MANUFACTURERS

A. Galvanized rigid steel conduit:
   1. One of the following or equal:
      a. Western Tube and Conduit.
      b. Allied Tube and Conduit.
      c. Wheatland Tube Co.

B. PVC-coated rigid steel conduit:
   1. One of the following or equal:
      a. Robroy Industries.
      b. Ocal, Inc.
      c. Calbond.

C. Liquid-tight flexible metal conduit:
   1. One of the following or equal:
      a. Southwire.
      b. AFC Cable Systems.
      c. Electri-FlexCompany.
      d. Anaconda.

D. Rigid nonmetallic PVC conduit:
   1. One of the following or equal:
      a. Carlon.
      b. Cantex.
      c. Triangle Conduit and Cable.

E. Conduit bodies:
   1. One of the following or equal:
      a. Crouse-Hinds.
      b. Appleton.
      c. O-Z / Gedney.
      d. Ocal, Inc.
      e. Robroy Industries.
      f. Calbond.
      g. Carlon.

F. Joint compound:
   1. Thomas and Betts.

G. Galvanized rigid steel conduit expansion fittings:
   1. One of the following or equal:
      a. Crouse-Hinds.
      b. Appleton.
      c. O-Z / Gedney.

H. Conduit seals:
   1. One of the following or equal:
      a. Appleton.
      b. Crouse-Hinds.
      c. O-Z / Gedney.

I. Conduit hangers and supports:
   1. As specified in Section 26 05 29.

2.02 EXISTING PRODUCTS (NOT USED)

2.03 MATERIALS (NOT USED)

2.04 MANUFACTURED UNITS (NOT USED)

2.05 EQUIPMENT (NOT USED)

2.06 COMPONENTS

A. GRC:
   1. All threads: NPT standard conduit threads with a 3/4-inch taper per foot:
      a. Running conduit threads are not acceptable.
   2. Hot-dip galvanized inside and out:
      a. Ensures complete coverage and heats the zinc and steel to a temperature that ensures the zinc alloys with the steel over the entire surface.
      b. Electro-galvanizing is not acceptable.
   3. Manufactured in accordance with:
      a. UL-6.
      b. ANSI C80.1.

B. PCS:
   1. The steel conduit, before PVC coating, shall be new, unused, hot-dip galvanized material, conforming to the requirements for type GRC.
   2. Coated conduit NEMA Standard RN-1:
      a. The galvanized coating may not be disturbed or reduced in thickness during the cleaning and preparatory process.
   3. Factory bonded PVC jacket:
      a. The exterior galvanized surfaces shall be coated with primer before PVC coating to ensure a bond between the zinc substrate and the PVC coating.
      b. Nominal thickness of the exterior PVC coating shall be 0.040 inch except where part configuration or application of the piece dictate otherwise.
      c. PVC coating on conduit and associated fittings shall have no sags, blisters, lumps, or other surface defects and free of holes and holidays.
      d. The PVC adhesive bond on conduit and fittings shall be greater than the tensile strength of the PVC plastic coating:
         1) Confirm bond with certified test results.
   4. A urethane coating shall be uniformly and consistently applied to the interior of all conduit and fittings:
      a. Nominal thickness of 0.002 inch.
      b. Conduit having areas with thin or no coating are not acceptable.
      c. All threads shall be coated with urethane.
   5. The PVC exterior and urethane interior coatings applied to the conduit shall afford sufficient flexibility to permit field bending without cracking or flaking at temperature above 30 degrees Fahrenheit (-1 degree Celsius).
   6. PCS conduit bodies and fittings:
      a. Malleable iron.
      b. The conduit body, before PVC coating, shall be new, unused material and shall conform to appropriate UL standards.
      c. The PVC coating on the outside of conduit bodies shall be 0.040 inch thick and have a series of longitudinal ribs to protect the coating from tool damage during installation.
      d. 0.002 inch interior urethane coating.
      e. Utilize the PVC coating as an integral part of the gasket design.
      f. Stainless steel cover screws heads shall be encapsulated with plastic to assure corrosion protection.

g. A PVC sleeve extending 1 conduit diameter or 2 inches, whichever is less, shall be formed at each female conduit opening.
   1) The inside diameter of the sleeve shall be the same as the outside diameter of the conduit to be used.
   2) The sleeve shall provide a vapor- and moisture-tight seal at every connection.

C. LFMC:
   1. Temperature rated for use in the ambient temperature at the installed location but not less than the following:
      a. General purpose:
         1) Temperature range -20 degrees Celsius to +80 degrees Celsius.
      b. Oil resistant:
         1) Temperature range -20 degrees Celsius to +60 degrees Celsius.
   2. Sunlight resistant, weatherproof, and watertight.
   3. Manufactured from single strip steel, hot-dip galvanized on all 4 sides before conduit fabrication.
   4. Strip steel spiral wound resulting in an interior that is smooth and clean for easy wire pulling.
   5. Overall PVC jacket.
   6. With integral copper ground wire, built in the core, in conduit trade sizes 1/2 inch through 1-1/4 inch.

D. PVC:
   1. Extruded from virgin polyvinyl chloride compound:
      a. Schedule 40 unless otherwise specified.
      b. Schedule 80 extra heavy wall where specified.
   2. Rated for 90 degrees Celsius conductors or cable.
   3. Rated for use in direct sunlight.

E. Conduit bodies:
   1. Material consistent with conduit type:
      a. Malleable iron bodies and covers when used with type GRC conduit.
      b. PVC bodies and covers when used with type PVC.
      c. PVC-coated malleable iron bodies and covers when used with type PCS.
   2. Conduit bodies to conform to Form 8, Mark 9, or Mogul design:
      a. Mogul design conforming to NEC requirements for bending space for large conductors for conduit trade sizes of 1 inch and larger with conductors #4 AWG and larger, or where required for wire bending space.
   3. Gasketed covers attached to bodies with stainless steel screws secured to threaded holes in conduit body.

2.07 ACCESSORIES

A. Connectors and fittings:
   1. Manufactured with compatible materials to the corresponding conduit.

B. Insulated throat metallic bushings:
   1. Construction:
      a. Malleable iron or zinc plated steel when used with steel conduit.
      b. Positive metallic conduit end stop.
      c. Integrally molded non-combustible phenolic insulated surfaces rated 150 degrees Celsius.
      d. Use fully insulated bushings on nonmetallic conduit system made of high impact 150 degrees Celsius rated non-combustible thermosetting phenolic.

C. Insulated grounding bushings:
   1. Construction:
      a. Malleable iron or steel, zinc plated, with a positive metallic end stop.

b. Integrally molded non-combustible phenolic insulated surfaces rated 150 degrees Celsius.
c. Tin plated copper grounding saddle for use with copper or aluminum conductors.

D. Electrical unions (Erickson Couplings):
1. Construction:
a. Malleable iron for use with steel conduit.
b. Concrete tight, 3-piece construction.
c. Rated for Class I Division 1 Group D in hazardous areas.

E. LFMC fittings:
1. Construction:
a. Malleable iron.
b. Furnished with locknut and sealing ring.
c. Liquid-tight, rain-tight, oil-tight.
d. Insulated throat.
e. Furnish as straight, 45-degree elbows and 90-degree elbows.
f. Designed to prevent sleeving:
1) Verify complete bonding of the raceway jacket to the plastic gasket seal.
g. Equipped with grounding device to provide ground continuity irrespective of raceway core construction. Grounding device, if inserted into raceway and directly in contact with conductors, shall have rolled over edges for sizes under 5 inches.
h. Where terminated into a threadless opening using a threaded hub fitting, a suitable moisture resistant/oil resistant synthetic rubber gasket shall be provided between the outside of the box or enclosure and the fitting shoulder. Gasket shall be adequately protected by and permanently bonded to a metallic retainer.
2. Corrosion resistant and outdoor LFMC fittings:
a. Construction:
1) PVC-coated liquid-tight fittings with a bonded 0.040-inch thick PVC coating on the metal connector to form a seal around the LFMC conduit.
2) Insulated throat and an integral sealing ring.

F. Hubs for threaded attachment of steel conduit to sheet metal enclosures:
1. Construction:
a. Insulated throat.
b. PVC coated when used in corrosive areas.
c. Bonding locknut.
d. Recessed neoprene O-ring to assure watertight and dust-tight connector.
e. One half (1/2)-inch through 1-1/4-inch steel zinc electroplated.
f. One and one half (1-1/2)-inch through 6-inch malleable iron zinc plated.
2. Usage:
a. All conduits in damp, wet, outdoor, and corrosive areas shall use threaded hubs for connections to sheet metal enclosures.

G. PVC fittings:
1. Materials:
a. All devices shall be made of PVC, using the same materials as used for Type PVC conduit.
b. All metal hardware shall be stainless steel.

H. Expansion/deflection couplings:
1. Use to compensate for movement in any directions between 2 conduit ends that connect.
2. Shall allow movement of 3/4 inch from the normal in all directions.
3. Shall allow angular movement for a deflection of 30 degrees from normal in any direction.
4. Constructed to maintain electrical continuity of the conduit system.
5. Materials:
a. End couplings: Bronze or galvanized ductile iron.

b. Sleeve: Neoprene.
c. Bands: Stainless steel.
d. Bonding jumper: Tinned copper braid.

I. Expansion couplings:
1. Shall allow for expansion and contraction of conduit:
a. Permitting 8-inch movement, 4 inches in either direction.
2. Constructed to maintain electrical continuity of the conduit system.
3. Materials:
a. Head: Malleable or ductile iron.
b. Sleeve: Steel.
c. Insulating bushing: Phenolic.
d. Finish: Hot-dip galvanized.

J. Conduit markers:
1. As specified in Section 26 05 53.

2.08 MIXES (NOT USED)

2.09 FABRICATION (NOT USED)

2.10 FINISHES (NOT USED)

2.11 SOURCE QUALITY CONTROL

A. As specified in Section 26 05 00.

PART 3 – EXECUTION

3.01 EXAMINATION (NOT USED)

3.02 PREPARATION (NOT USED)

3.03 INSTALLATION

A. As specified in Section 26 05 00.

B. General:
1. Conduit routing:
a. The Electrical Drawings are diagrammatic in nature:
1) Install conduit runs as specified with schematic representation indicated on the Drawings and as specified.
2) Modify conduit runs to suit field conditions, as accepted by the Engineer:
(a) Make changes in conduit locations that are consistent with the design intent but are dimensionally different, or routing to bypass obstructions.
(b) Make changes in conduit routing due to the relocation of equipment.
3) The Electrical Drawings do not indicate all required junction boxes and pull boxes:
(a) Provide junction boxes and pull boxes to facilitate wire pulling as required:
(1) To meet cable manufacturer's pulling tension requirements.
(2) To limit total conduit bends between pull locations.
(b) Install junction boxes and pull boxes at locations acceptable to the Engineer.
b. The Contractor is responsible for any deviations in general location, conduit size, routing, or changes to the conduit schedule without the express written approval or direction by the Engineer:
1) The Engineer is the sole source in determining whether the change is constituted as a deviation.
2) Perform any changes resulting in additional conduits, or extra work from such deviations.
3) Incorporate any deviations on the Record Documents.
2. Use only tools recommended by the conduit manufacturer for assembling conduit system.

3. Provide adequate clearances from high-temperature surfaces for all conduit runs.
4. Do not install 1-inch or larger conduits in or through structural members unless approved by the Engineer.
5. Run conduit exposed to view parallel with or at right angles to structural members, walls, or lines of the building:
    a. Install straight and true conduit runs with uniform and symmetrical elbows, offsets, and bends.
    b. Make changes in direction with long radius bends or with conduit bodies.
6. Install conduit with total conduit bends between pull locations less than or equal to 270 degrees.
7. Route all exposed conduit to preserve headroom, access space and work space and to prevent tripping hazards and clearance problems:
    a. Install conduit runs so that runs do not interfere with proper and safe operation of equipment and do not block or interfere with ingress or egress, including equipment removal hatches.
    b. Route conduit to avoid drains or other gravity lines. Where conflicts occur, relocate conduit as required.
8. When installing conduit through existing slabs or walls make provisions for locating any possible conflicting items where conduit is to penetrate. Use tone signal or X-ray methods to make certain that no penetrations will be made into existing conduit, piping, cables, post-tensioning cables, etc.
9. Plug conduits brought into pull boxes, manholes, handholes, and other openings until used to prevent entrance of moisture.
10. For 2-inch and larger conduit runs, snake conduits with conduit cleaner equipped with a cylindrical mandrel of a diameter not less than 85 percent of nominal diameter of conduit:
    a. Remove and replace conduits through which mandrel will not pass.
11. Provide all sleeves and openings required for the passage of electrical raceways or cables even when these openings or sleeves are not specifically indicated on the Drawings.
12. Install complete conduit systems before conductors are installed.
13. Provide metallic conduits terminating in transformer, switchgear, motor control center or other equipment conduit windows with grounding bushings and ground with a minimum No. 6 AWG ground wire.
14. Underground and embedded conduits:
    a. Install underground conduits, including conduit runs below slabs-on-grade in concrete-reinforced duct bank construction:
        1) If noted on plans.
    b. Make underground conduit size transitions at pullboxes and manholes.
    c. Install spare conduits in underground duct banks towards top center of runs to allow for ease of installation of future cables as conduits enter underground manholes and pullboxes.
    d. Seal around conduit penetrations of below grade walls with a mechanical seal.
    e. Provide 24-inch-minimum cover at finished grade for direct burial underground conduit. Provide 3-inch-minimum sand above and below conduit.
    f. Provide 24-inch minimum cover at finished grade above top of concrete for concrete-encased duct banks. Provide 2-inch minimum separation between conduits and 3-inch minimum concrete encasement around conduits. Extend the concrete encasement under any floor slabs or equipment mounting pads to the point of raceway termination. After the concrete envelope has set, pull a bristle brush through each raceway to remove debris. Underground conduits shall be concrete encased unless shown as direct buried on the Drawings.
    g. Where other utility piping systems are encountered or being installed along a raceway route, maintain a 12-inch-minimum vertical separation between raceways and other systems at crossings. Maintain a 12-inch-minimum separation between raceways and other systems in parallel runs. Do not place raceways over valves or

couplings in other piping systems. Refer conflicts with these requirements to the Engineer for instructions before further work is done.

h. Thoroughly clean conduits before lying. During construction and after completion, the conduit ends shall be kept plugged to prevent water from washing mud into the manholes or pull boxes.

i. Terminate conduit in end bells in manholes and pull boxes and enter at right angles to the wall.

j. Place conduit separators every 4 feet on centers and securely anchor to prevent movement.

k. Backfill, Non-paved Areas: Use native backfill, compacted in 6-inch layers to 90 percent relative compaction. Final backfill elevation shall match existing.

l. Backfill, Paved Areas:

1) Use clean imported sand having the following gradation and having a sand equivalent (S.E.) of 30 or greater:

(a) Sieve SizePercent Passing By Weight
(b) 3/8 inch 100
(c) No. 4 75 - 100
(d) No. 30 12 - 50
(e) No. 100 5 - 20
(f) No. 200 0 - 15

2) Imported sand shall be free from organic material, trash, debris and rubbish.

3) Compact trench backfill by manual methods. Water flooding or jetting is not permitted.

C. Lighting and receptacle conduits:

1. Install conduit runs for lighting and receptacle circuits, whether or not indicated on the Drawings.

2. Install conduits in accordance with the requireents of this Section unless otherwise indicated.

3. Minimum conduit size:

a. 1 inch for exposed conduits.

b. 1 inch for underground or in-slab conduits.

4. Provide conduit materials for the installed location as specified in Section 26 05 00.

D. Conduit usage:

1. Exposed conduits:

a. Rigid conduit:

1) Install the rigid conduit type for each location as specified in Section 26 05 00.

2) Minimum size: 1-inch.

b. Flexible conduit:

1) Use flexible conduit for final connections between rigid conduit and motors, vibrating equipment, instruments, control equipment or where required for equipment servicing:

(a) Use type LFMC with rigid metallic conduit.

2) Minimum size: 3/4-inch:

(a) 1/2 when required for connection to instruments.

3) Maximum length:

(a) Fixed equipment:

Conduit Trade Size	Flexible Conduit Length (inches)
3/4	18
1	18
1-1/4	18
1-1/2	18
2	36

2-1/2	36
3	36
3-1/2	38
4	40

(b) Removable instruments or hinged equipment:
(1) As required to allow complete removal or full movement without disconnecting or stressing the conduit.

2. Concrete encased and embedded conduits:
   a. Type PVC Schedule 40 and PVC-coated rigid metallic conduit as specified below:
      1) Use Type PCS in underground and embedded installation as follows:
         (a) Stub-up and risers to grade floor or equipment from nonmetallic conduits.
         (b) Entering and exiting underground or embedded conduit runs a minimum 12 inches above and below grade or finished floor.
         (c) For any and all bends where the total deflection is greater than 45 degrees.
      2) Minimum size:
         (a) 2-inch in duct banks unless otherwise indicated on the Drawings.
         (b) 1-inch for in slab conduits unless otherwise indicated on the Drawings.
3. Direct buried and sand-bedded ductbank conduits:
   a. Type PVC Schedule 40.
   b. Minimum size: 1-inch.
4. PVC coated rigid metallic conduit:
   a. Use specifically manufactured or machined threading dies to manufacturer's specifications to accommodate the PVC jacket.
5. GRC:
   a. Conduit shall be cut square and reamed before threading.
6. PVC:
   a. Conduit terminations shall be via threaded adapters into threaded hubs on the junction boxes or conduit bodies.
   b. Conduit terminations into boxes without threaded hubs shall utilize a threaded adapter and a flat neoprene washer on the outside of the box.
      1) Use a locknut on the inside of the box to tighten the adapter to the box.
   c. Route conduit to afford it the maximum physical protection.
      1) If necessary, cover conduit to afford additional protection when it cannot be shielded by the structure or machinery frames.
         (a) Use Schedule 80 where exposed runs may be subject to physical damage.

E. Conduit joints and bends:
1. General:
   a. Where conduit is underground, under slabs on grade, exposed to the weather or in NEMA Type 4 or NEMA Type 4X locations, make joints liquid-tight.
   b. Keep bends and offsets in conduit runs to an absolute minimum.
   c. All bends shall be symmetrical.
   d. The following conduit systems shall use large radius sweep elbows:
      1) Underground conduits.
      2) Conduits containing medium voltage cables.
      3) Conduits containing shielded cables.
      4) Conduits containing fiber optic cables.
   e. Provide large radius factory-made bends for 1-1/4-inch trade size or larger.
   f. Make field bends with a radius of not less than the requirements found in the NEC:
      1) The minimum bending radius of the cable must be less than the radius of the conduit bend.
      2) Make all field bends with power bending equipment or manual benders specifically intended for the purpose:

(a) Make bends so that the conduit is not damaged and the internal diameter is not effectively reduced.
(b) For the serving utilities, make bends to meet their requirements.

g. Replace all deformed, flattened, or kinked conduit.

2. Threaded conduit:
   a. Cut threads on rigid metallic conduit with a standard conduit cutting die that provides a 3/4-inch per foot taper and to a length such that all bare metal exposed by the threading operation is completely covered by the couplings or fittings used. In addition, cut the lengths of the thread such that all joints become secure and wrench tight just preceding the point where the conduit ends would butt together in couplings or where conduit ends would butt into the ends or shoulders of other fittings.
   b. Thoroughly ream conduit after threads have been cut to remove burrs.
   c. Use bushings or conduit fittings at conduit terminations.
   d. On exposed conduits, repair scratches and other defects with galvanizing repair stick, Enterprise Galvanizing “Galvabar” or CRC “Zinc It”.
   e. Coat conduit threads with an approved electrically conductive sealant and corrosion inhibitor that is not harmful to the conductor insulation:
      1) Apply to the male threads and tighten joints securely.
      2) Clean excess sealant from exposed threads after assembly.
   f. Securely tighten all threaded connections.
   g. Any exposed threaded surface must be cleaned and coated with a galvanizing solution so that all exposed surfaces have a galvanized protective coating.
3. PVC:
   a. Use approved solvent-weld cement specifically manufactured for the purpose. Spray-type cement is not allowed.
   b. Apply heat for bends so that conduit does not distort or discolor. Use a spring mandrel as required to assure full inside diameter at all bends:
      1) Utilize a heater specifically for PVC conduit as recommended by the conduit manufacturer.

F. Conduit sealing and drainage:
1. Conduit drainage and sealing:
   a. Provide sealing and drainage in vertical drops of long (in excess of 20 feet), exterior, above grade conduit runs at the points at which the conduit enter buildings, switchgear, control panels, lighting panelboards, and other similar enclosures.
   b. Provide seal fittings with drains in vertical drops directly above grade for exterior, above grade conduit runs that are extended below grade.
   c. Provide conduit seals with drains in areas of high humidity and rapidly changing temperatures:
      1) Where portions of an interior raceway pass through walls, ceilings or floors that separate adjacent areas having widely different temperatures.

G. Conduit supports:
1. General:
   a. Provide appropriate hangers, supports, fasteners, and seismic restraints to suit applications:
      1) As specified in Section 26 05 29.
      2) Provide support materials consistent with the type of conduit being installed as specified in Section 26 05 00.
   b. Support conduit at the intervals required by the NEC.
   c. Perforated strap and plumbers tape are not acceptable for conduit supports.
2. Conduit on concrete or masonry:
   a. Use 1-hole malleable iron straps with metallic or plastic expansion anchors and screws or support from preset inserts.
   b. Use preset inserts in concrete when possible.

c. Use pipe spacers (clamp backs) in wet locations.
d. On plaster or stucco, use 1-hole malleable iron straps with toggle bolts.

3. Conduit on metal decking:
   a. Use 1-hole malleable iron straps with 1-inch long cadmium-plated Type A panhead sheet metal screws. Fully or partially hammer-driven screws are not acceptable.
4. Suspended conduit:
   a. Use malleable iron factory-made split-hinged pipe rings with threaded suspension rods sized for the weight to be carried (minimum 3/8-inch diameter), Kindorf, or equal.
   b. For grouped conduits, construct racks with threaded rods and tiered angle iron or preformed channel cross members. Clamp each conduit individually to a cross member. Where rods are more than 2 feet long, provide rigid sway bracing.
5. Supports at structural steel members:
   a. Use beam clamps.
   b. Drilling or welding may be used only as specified or with approval of the Engineer.
6. PCS systems:
   a. Provide right angle beam clamps and U bolts specially formed and sized to snugly fit the outside diameter of the coated conduit. Provide "U" bolts with PVC encapsulated nuts that cover the exposed portions of the threads.
   b. Securely fasten exposed conduits with Type 316 stainless steel clamps or straps.

H. Expansion or expansion/deflection fittings:
1. General:
   a. Align expansion coupling with the conduit run to prevent binding.
   b. Follow manufacturer's instructions to set the piston opening.
   c. Install expansion fittings across concrete expansion joints and at other locations where necessary to compensate for thermal or mechanical expansion and contraction.
   d. Furnish fittings of the same material as the conduit system.

I. Empty conduits:
1. Provide a polyethylene rope rated 250 pounds tensile strength in each empty conduit more than 10 feet in length.
2. Seal ends of all conduit with approved, manufactured conduit seals, caps or plugs immediately after installation:
   a. Keep ends sealed until immediately before pulling conductors.

J. Miscellaneous:
1. Provide electrical unions at all points of union between ends of rigid conduit systems that cannot otherwise be coupled:
   a. Running threads and threadless couplings are not allowed.
2. Replace any conduit installed that the Engineer determines does not meet the requirements of this Specification.

3.04 ERECTION, INSTALLATION APPLICATIONS, CONSTRUCTION (NOT USED)

3.05 REPAIR/RESTORATION (NOT USED)

3.06 RE-INSTALLATION (NOT USED)

3.07 FIELD QUALITY CONTROL

A. As specified in Section 26 05 00.

3.08 ADJUSTING (NOT USED)

3.09 CLEANING (NOT USED)

3.10 PROTECTION

A. As specified in Section 26 05 00.

3.11 SCHEDULES (NOT USED)

END OF SECTION

SECTION 260534
BOXES

PART 1 – GENERAL

1.01 SUMMARY

A. Section includes:
   1. Device boxes.
   2. Raceway system boxes.

B. Related sections:

   1. Section 01 33 00 - Submittal Procedures.
   2. Section 26 05 00 - Common Work Results for Electrical.

1.02 REFERENCES

A. As specified in Section 26 05 00.

B. American National Standards Institute (ANSI).

C. ASTM International (ASTM):
   1. A47 - Standard Specification for Ferritic Malleable Iron Castings.
   2. D149 - Standard Test Method for Dielectric Breakdown Voltage and Dielectric Strength of Solid Electrical Insulating Materials at Commercial Power Frequencies.
   3. D495 - Standard Test Method for High-Voltage, Low-Current, Dry Arc Resistance of Solid Electrical Insulation.
   4. D570 - Standard Test Method for Water Absorption of Plastics.
   5. D648 - Standard Test Method for Deflection Temperature of Plastics Under Flexural Load in the Edgewise Position.
   6. D790 - Standard Test Methods for Flexural Properties of Unreinforced and Reinforced Plastics and Electrical Insulating Materials.
   7. D792 - Standard Test Methods for Density and Specific Gravity (Relative Density) of Plastics by Displacement.

D. Joint Industry Conference (JIC).

E. National Electrical Code (NEC).

F. National Electrical Manufacturers Association (NEMA):
   1. 250 - Enclosures for Electrical Equipment (1000 V Maximum).

G. Underwriters Laboratories, Inc. (UL):
   1. 94 - Standard for Tests for Flammability of Plastic Materials for Parts in Devices and Appliances.

1.03 DEFINITIONS

A. As specified in Section 26 05 00.

B. Specific definitions:
   1. Arcing parts: Circuit breakers, motor controllers, switches, fuses, or any device intended to interrupt current during its operation.
   2. Raceway system boxes: Boxes that are used for wire and cable pullboxes, conduit junction boxes, or terminal boxes.

1.04 SYSTEM DESCRIPTION

A. Provide outlet boxes for devices such as switches, receptacles, telephone and computer jacks, security systems, junction, and pullboxes for use in the raceway systems, etc.

B. Provide boxes and conduit bodies as indicated on the Drawings or as needed to complete the raceway installation.

1.05 SUBMITTALS

A. Furnish submittals as specified in Sections 01 33 00 and 26 05 00.

B. Product data:
   1. Manufacturer.
   2. Materials.
   3. Dimensions:
      a. Height.
      b. Width.
      c. Depth.
      d. Weight.
      e. NEMA rating.
   4. Conduit entry locations.
   5. Catalog cut sheets.
   6. Installation instructions.

C. Shop drawings:
   1. Include identification and sizes of pull boxes.

1.06 QUALITY ASSURANCE

A. As specified in Section 26 05 00.

B. Regulatory requirements:
   1. Outlet boxes shall comply with all applicable standards of:
      a. JIC.
      b. NEC.
      c. NEMA.
      d. UL.

1.07 DELIVERY, STORAGE, AND HANDLING

A. As specified in Section 26 05 00.

1.08 PROJECT OR SITE CONDITIONS

A. As specified in Section 26 05 00.

1.09 SEQUENCING

A. As specified in Section 26 05 00.

1.10 SCHEDULING (NOT USED)

1.11 WARRANTY

A. As specified in Section 26 05 00.

1.12 SYSTEM START UP

A. As specified in Section 26 05 00.

1.13 OWNER'S INSTRUCTIONS (NOT USED)

1.14 MAINTENANCE (NOT USED)

PART 2 – PRODUCTS

2.01 MANUFACTURERS

A. One of the following or equal:
   1. Plastic coated steel boxes:
      a. Rob Roy.
      b. OCAL.
   2. Cast device boxes:
      a. Appleton.
      b. Crouse - Hinds.
      c. OZ/Gedney.
   3. Formed steel enclosures:
      a. Hoffman.

b. Thomas and Betts.
c. Stahlin.
d. Rittal.

4. Stainless steel enclosures:
   a. Hoffman.
   b. Stahlin.
   c. Rittal.
5. Underground, pre-cast concrete pull boxes:
   a. Oldcastle Infrastructure.
   b. Jensen Precast.

2.02 EXISTING PRODUCTS (NOT USED)

2.03 MATERIALS (NOT USED)

2.04 MANUFACTURED UNITS

A. Cast device boxes:
   1. Construction:
      a. With internal green ground screw.
      b. Furnished with a suitable gasketed cover.
      c. With integral cast mounting lugs when surface mounted.
      d. Conduit sizes range from 3/4 inch to 1 inch.
      e. Tapered threaded hubs with integral bushing.
   2. Malleable iron boxes:
      a. Conforming to ASTM A 47 Grade 32510.

B. Plastic coated bast device boxes:
   1. Construction:
      a. With internal green ground screw.
      b. Furnished with a suitable gasketed cover.
      c. With integral cast mounting lugs when surface mounted.
      d. Conduit sizes range from 3/4 inch to 1 inch.
      e. Double coated with a nominal 0.002-inch (2 mil) urethane on both the interior and exterior before application of PVC coating.
      f. With a minimum 0.040-inch (40 mil) PVC coating bonded to exterior.
      g. With pressure sealing sleeve to protect the connection with conduit.

C. Formed steel enclosures:
   1. Steel:
      a. NEMA Type 12.
      b. Fabricated from 14-gauge steel, minimum.
      c. All seams continuously welded ground smooth.
      d. Door:
         1) Rolled lip around 3 sides.
         2) Attached to enclosure by means of a continuous stainless steel hinge and pin.
      e. Neoprene door gasket to provide a watertight, dusttight, oiltight seal:
         1) Attached with an adhesive.
         2) Retained by a retaining strip.
      f. Fabricate all external removable hardware for clamping the door to the enclosure body from zinc-plated heavy gauge steel:
         1) With a hasp and staple for padlocking.
      g. Provide large enclosures with door and body stiffeners for extra rigidity.
      h. No holes or knockouts.
      i. Finish:
         1) ANSI-61 gray electrostatically applied polyester powder inside and out over cleaned and primed surfaces.

2) White electrostatically applied polyester powder mounting plate.

j. Heavy gauge steel external mounting brackets when surface mounted.

k. NEMA Type 3R for outdoor locations in non-corrosive areas.

2. Stainless steel:

a. NEMA Type 4X:

1) Boxes in locations subject to flooding or temporary submersion:

(a) NEMA Type 6.

b. Fabricated from 14-gauge Type 316 stainless steel.

c. All seams continuously welded.

d. Door:

1) Rolled lip around 3 sides.

2) Attached to enclosure by means of a continuous stainless steel hinge and pin.

e. Neoprene door gasket to provide a watertight seal:

1) Attached with an adhesive.

2) Retained by a retaining strip.

f. Fabricate all external removable hardware for clamping the door to the enclosure body from heavy gauge stainless steel:

1) With a hasp and staple for padlocking.

g. Provide large enclosures with door and body stiffeners for extra rigidity.

h. No holes or knockouts.

i. Finish:

1) Brushed.

j. Stainless steel external mounting brackets when surface mounted.

3. All boxes installed outdoors shall be NEMA 3R or NEMA 4X.

D. Underground, pre-cast concrete pull boxes:

1. General: Provide precast concrete units complying with ASTM C858 with a load designation of A-16. Dimensions indicated on drawings are inside box dimensions. Units shall have a sump in the bottom. Provide units manufactured by Oldcastle Precast, Jensen Precast or equivalent.

2. Handholes: Refer to drawings for size. Provide handholes with concrete bolt down covers in unpaved areas and with flush mounted cast iron traffic covers with bolt downs and lifting hook in paved areas.

3. Concrete pull boxes and vaults: Provide with pull-in iron, hot-dipped galvanized cover with hot-dipped galvanized frame, and two galvanized cable racks with porcelain blocks on each of the two longest sides. Provide parkway rated covers in non-traffic areas and AASHTO H-20 traffic rated covers in traffic areas. Refer to Drawings for size. Secure covers with two stainless steel penthead bolts to stainless steel insert nuts. After cables have been pulled and inspected, seal box between cover and frame with a mastic compound similar to Permagum, Dukaseal, or equivalent.

a. For pullboxes 2 feet by 3 feet and larger provide end hinged, torsion spring opening assist type cover assemblies. Provide single leaf assemblies for 2 feet by 3 feet pullboxes. Provide double leaf assemblies for pullboxes larger than 2 feet by 3 feet.

4. Boxes shall be installed on minimum 6-inch compacted crushed rock base. Contractor shall knock-out sump in bottom of box such that water can drain through sump to the crushed rock underneath the box.

5. Cover Identification: engrave or bead weld handhole and pullbox covers to indicated services within pullbox as follows:

Service	Identification
Power/Controls	Electric
General Area Lighting	Lighting
Telephone	Telephone
Ground Rods	Ground

6. Joint Sealing Compound: Provide joint sealing compound conforming to Federal Specification SS-S-00210. Provide Associated Concrete Products Quickseal or equivalent.

2.05 EQUPMENT (NOT USED)

2.06 COMPONENTS (NOT USED)

2.07 ACCESSORIES

A. Fasteners:
   1. Electroplated or stainless steel in boxes with wiring devices.
   2. Screws, nuts, bolts, and other threaded fasteners:
      a. Stainless steel.

B. Provide breather and drain fittings where appropriate.

PART 3 – EXECUTION

3.01 EXAMINATION (NOT USED)

3.02 PREPARATION (NOT USED)

3.03 INSTALLATION

A. As specified in Section 26 05 00.

B. General:
   1. Provide materials and construction suitable for environmental conditions at the location of the box as specified in Section 26 05 00.
   2. Provide outlet box materials to match the conduit system:
      a. GRC - Cast ferrous boxes.
      b. PCS - PVC coated cast ferrous boxes.
   3. Solid type gang boxes:
      a. For more than 2 devices.
      b. For barriered outlets.
   4. Support all wall mounted NEMA Type 4 or NEMA Type 4X boxes to maintain a minimum of 7/8-inch free air space between the back of the enclosure and the wall:
      a. Use machined spacers to maintain air space; built-up washers are not acceptable.
      b. Use stainless steel or nylon materials for spacers.
   5. Use cast malleable iron boxes when box must support other devices.
   6. Boxes serving luminaires or devices:
      a. Use as pull boxes wherever possible.
   7. Size boxes in accordance with NEC requirements and to provide sufficient room for the future components and cables indicated on the Drawings.
   8. For fire-rated construction, provide materials and installation for use in accordance with the listing requirements of the classified construction.

C. Outlet boxes:
   1. Locate outlet boxes as indicated on the Drawings:
      a. Adjust locations so as not to conflict with structural requirements or other trades.
   2. Use deep threaded-hub malleable iron boxes:
      a. To act as a pull box for conductors in a conduit system.
      b. Accommodate wiring devices.
   3. Use deep threaded-hub plastic coated malleable iron boxes in corrosive and NEMA Type 4X area and when the conduit system is PVC coated steel.
   4. Outlet boxes may be used as junction boxes wherever possible.

D. Pull boxes and junction boxes:
   1. Size pull boxes in accordance with NEC requirements and to provide sufficient room for any future conduits and cables as indicated on the Drawings.
   2. Install pull boxes such that access to them is not restricted.

E. For boxes not indicated:
   1. Provide types and mountings as required to suit the equipment and that will be consistent with the conduit system and environmental conditions as indicated in Section 26 05 00.
   2. Outlet, switch, and junction boxes where surface mounted in exposed locations:
      a. Cast ferrous boxes with mounting lugs, zinc, or cadmium plating finish.

3.04 ERECTION, INSTALLATION, APPLICATION, CONSTRUCTION (NOT USED)

3.05 REPAIR/RESTORATION (NOT USED)

3.06 REINSTALLATION (NOT USED)

3.07 FIELD QUALITY CONTROL

A. As specified in Section 26 05 00.

3.08 ADJUSTING (NOT USED)

3.09 CLEANING

A. As specified in Section 26 05 00.

3.10 PROTECTION

A. As specified in Section 26 05 00.

3.11 SCHEDULES (NOT USED)

END OF SECTION

SECTION 260553
IDENTIFICATION FOR ELECTRICAL SYSTEMS

PART 1 – GENERAL

1.01 SUMMARY

A. Section includes:
   1. Identification of electrical equipment, devices, and components.
   2. Material, manufacturing, and installation requirements for identification devices.

B. Related sections:
   1. Section 01 33 00 - Submittal Procedures.
   2. Section 26 05 00 - Common Work Results for Electrical.
   3. Section 26 05 33 - Conduits.

1.02 REFERENCES

A. As specified in Section 26 05 00.

B. Occupational Safety and Health Administration (OSHA).

1.03 DEFINITIONS

A. As specified in Section 26 05 00.

1.04 SYSTEM DESCRIPTION

A. Nameplates:
   1. Provide a nameplate for each piece of electrical equipment and devices, control panel and control panel components.
   2. Provide all nameplates of identical style, color, and material throughout the facility.
   3. Device nameplates information:
      a. Designations as indicated on the Drawings and identified on the Process and Instrumentation Drawings.

B. Wire numbers:
   1. Coordinate the wire numbering system with all vendors of equipment so that every field wire has a unique number associated with it for the entire system:
      a. Wire numbers shall correspond to the wire numbers on the control drawings or the panel and circuit numbers for receptacles and lighting.
      b. Wire numbers shall correspond to the terminal block number to which they are attached in the control panel.
      c. Internal panel wires on a common terminal shall have the same wire number.
      d. Multi-conductor cables shall be assigned a cable number that shall be attached to the cable at intermediate pull boxes and stub-up locations beneath freestanding equipment. All multi-conductor and instrumentation cables shall be identified at pull points as described above:
         1) Label armored multi-conductor cable using the conduit number as indicated on the Drawings, following the requirements for conduit markers in Section 26 05 33.
   2. Provide the following wiring numbering schemes throughout the project for field wires between process control module, (PCM), vendor control panels, (VCP), motor control centers, (MCC), field starters, field instruments, etc.

(ORIGIN LOC.)–(ORIGIN TERM.)/(DEST. LOC.)–(DEST. TERM.)

OR

(ORIGIN LOC.)–(ORIGIN TERM.)
(DEST. LOC.)–(DEST. TERM.)

Where:
ORIGIN LOC. = Designation for originating panel or device
ORIGIN TERM. = Terminal designation at originating panel or device
DEST. LOC. = Designation for destination panel or device
DEST. TERM. = Terminal designation at destination panel or device or PLC I/O address at destination panel

a. Identify equipment and field instruments as the origin.
b. PCMs are always identified as the destination.
c. Location is the panel designation for VCP, LCP, or PCM. For connections to MCCs, location is the specific starter tag and loop number. Location is the tag and loop number for motor starters, field instruments, and equipment. Any hyphen in the panel designation or tag and loop number shall be omitted.
d. Terminal designation is the actual number on the terminal block where the conductor terminates at field devices and vendor control panels. For multi-conductor cables, all terminal numbers shall be shown, separated by commas.
e. Terminal designations at motor leads shall be the motor manufacturer's standard terminal designation (e.g. T1, T2, T3, etc.).
f. Terminal designations at PCMs where the field conductor connects to field terminal blocks for a PLC input or output shall be the PLC address (Note: the following PLC I/O numbering scheme is typical for Allen-Bradley, the numbering scheme should be modified to match that of the actual PLC manufacturer used for the project):
   Discrete Point: W:X:Y/Z
   Analog Point: W:X:Y.Z
   Where:
   W = I for input, O for output X = PLC number (1, 2, 3…)
   Y = Slot number (01, 02, 03…)
   Z = Terminal number (00, 01, 02…) for a discrete point or a word number for an analog point (1, 2, 3…)
g. Terminal designations at PCMs where the conductor does not connect to a PLC I/O point shall be the terminal number with a "C" prefix (e.g. C0010). For common power after a fuse or neutrals after a switch, the subsequent points shall have and capital letter suffix starting with "A" (e.g. C0010A).

3. Case 1: Vendor control panel (VCP) to process control module (PCM):
   Field wire number/label: A-B/C-D
   A = Vendor control panel number without hyphen (VCP#)
   B = Terminal number within VCP (manufacturer's or vendor's standard terminal number)
   C = Process control module number without hyphen (PCM#)
   D = Either the PLC address if the field terminal is connected directly to a PLC input or output point or the terminal number with a "C" prefix if not connected directly to a PLC I/O point (C0010)
   Examples: VCP#-10/PCM#-I:1:01/01
   VCP#-10/PCM#-O:1:10/07
   VCP#-10/PCM#-C0100

4. Case 2: Field instrument to process control module (PCM):

   Field wire number/label: E-F/C-D

   C = Process control module number without hyphen (PCM#)

   D = Either the PLC address if the field terminal is connected directly to a PLC input or output point or the terminal number with a “C” prefix if not connected directly to a PLC I/O point (C0010)

   E = Field mounted instrument tag and loop numbers without hyphen (EDV#)

   F = Manufacturer’s standard terminal number within instrument. Use both terminal numbers for analog points separated by a comma

   Examples: TIT#-2,3/PCM#-I:1:01.1
   TSH#-1/PCM#-I:2:01/00

5. Case 3: Motor control center (MCC) to process control module (PCM):

   Field wire number/label: G-B/C-D

   B = Terminal number within Motor Control Center (manufacturer’s or vendor’s standard terminal number)

   C = Process control module without hyphen (PCM#)

   D = Either the PLC address if the field terminal is connected directly to a PLC input or output point or the terminal number with a “C” prefix if not connected directly to a PLC I/O point (C0010)

   G = Actual starter designation in the motor control center without hyphen (MMS#)

   Examples: MMS#-10/PCM#-I:1:01/01
   MMS#-10/PCM#-O:1:10/07
   MMS#-10/PCM#-C0100

6. Case 4: Motor control center (MCC) to vendor control panel (VCP):

   Field wire number/label: G-B/A-B

   A = Vendor control panel number without hyphen (VCP#)

   B = Terminal number within motor control center or vendor control panel (manufacturer’s or vendors standard terminal number)

   G = Actual starter designation in the motor control center without hyphen (MMS#)

   Example: MMS#-X2/VCP#-10

7. Case 5: Motor leads to a motor control center (MCC):

   Field wire number/label: H-I/G-B

   B = Terminal number within motor control center (manufacturer’s standard terminal number)

   G = Actual starter designation in the motor control center without hyphen (MMS#)

   H = Equipment tag and loop number without hyphen (PMP#)

   I = Motor manufacturer’s standard motor lead identification (e.g. T1, T2, T3, etc.)

   Example: PMP-#-T3/MMS#-T3

8. Case 6: Remote or separately mounted starter or variable frequency drive (VFD) to process control module (PCM):

   Field wire number/label: J-B/C-D

   B = Terminal number within starter or variable frequency drive (manufacturer’s standard terminal number)

   C = Process control module number without hyphen (VCP#)

   D = Either the PLC address if the field terminal is connected directly to a PLC input or output point or the terminal number with a “C” prefix if not connected directly to a PLC I/O point (C0010)

   J = Starter or variable frequency drive tag and loop number without hyphen (MMS#)

   Examples: MMS#-10/PCM#-I:1:01/01
   MMS#-10/PCM#-O:2:10/07
   MMS#-10/PCM#-C0010

9. Identify all spare conductors as required for other field wires with an “S” prefix:

   Example: S MMS#-10/PCM#-C011

1.05 SUBMITTALS

A. Furnish submittals as specified in Sections 01 33 00 and 26 05 00.

B. Product data:
   1. Nameplates:
      a. Color.
      b. Size:
         1) Outside dimensions.
         2) Lettering.
      c. Material.
      d. Mounting means.
   2. Nameplate schedule:
      a. Show exact wording for each nameplate.
      b. Include nameplate and letter sizes.
   3. Wire numbers:
      a. Manufacturer's catalog data for wire labels and label printer.

C. Record documents:
   1. Update the conduit schedule to reflect the exact quantity of wire numbers including spares and destination points for all wires.

1.06 QUALITY ASSURANCE (NOT USED)

1.07 DELIVERY, STORAGE, AND HANDLING

A. As specified in Section 26 05 00.

1.08 PROJECT SITE CONDITIONS (NOT USED)

1.09 SEQUENCING (NOT USED)

1.10 SCHEDULING (NOT USED)

1.11 WARRANTY

A. As specified in Section 26 05 00.

1.12 SYSTEM START UP

A. As specified in Section 26 05 00.

1.13 OWNER'S INSTRUCTIONS (NOT USED)

1.14 MAINTENANCE (NOT USED)

PART 2 – PRODUCTS

2.01 MANUFACTURERS

A. Nameplates and signs:
   1. One of the following or equal:
      a. Brady.
      b. Seton.

B. Conductor and cable markers:
   1. Heat-shrinkable tubing:
      a. One of the following or equal:
         1) Raychem.
         2) Brady.
         3) Thomas & Betts.
         4) Kroy.

C. Conduit and raceway markers:
   1. One of the following or equal:
      a. Almetek: Mini Tags.
      b. Lapp Group: Maxi System.

2.02 EXISTING PRODUCTS (NOT USED)

2.03 MATERIALS

A. Nameplates:
   1. Fabricated from white-center and red face or black-center, white face laminated plastic engraving stock:
      a. 3/32-inch thick material.
      b. Two-ply.
      c. With chamfered edges.
      d. Block style engraved characters of adequate size to be read easily from a distance of 6 feet:
         1) No characters smaller than 1/8-inch in height.

B. Signs:
   1. Automatic equipment and high voltage signs:
      a. Suitable for exterior use.
      b. In accordance with OSHA regulations.

C. Conductor and cable markers:
   1. Machine printed black characters on white tubing.
   2. Ten point type or larger.

D. Conduit and raceway markers:
   1. Non-metallic:
      a. UV resistant holder and letters
      b. Black letters on yellow background.
      c. Minimum letter height: 1/2-inch.
      d. Adhesive labels are not acceptable.

2.04 MANUFACTURED UNITS (NOT USED)

2.05 EQUIPMENT (NOT USED)

2.06 COMPONENTS (NOT USED)

2.07 ACCESSORIES (NOT USED)

2.08 MIXES (NOT USED)

2.09 FABRICATION (NOT USED)

2.10 FINISHES (NOT USED)

2.11 SOURCE QUALITY CONTROL

A. Nameplates:
   1. Provide all nameplates for control panel operator devices (e.g. pushbuttons, selector switches, pilot lights, etc.):
      a. Same material and same color and appearance as the device nameplates, in order to achieve an aesthetically consistent and coordinated system.

PART 3 – EXECUTION

3.01 EXAMINATION (NOT USED)

3.02 PREPARATION (NOT USED)

3.03 INSTALLATION

A. As specified in Section 26 05 00.

B. Nameplates:
   1. Attach nameplates to equipment with rivets, bolts or sheet metal screws, approved waterproof epoxy-based cement or install in metal holders welded to the equipment.
   2. On NEMA Type 4, NEMA Type 4X, or NEMA Type 7 enclosures, use epoxy-based cement to attach nameplates.

3. Nameplates shall be aligned and level or plumb to within 1/64 inch over the entire length:
    a. Misaligned or crooked nameplates shall be remounted, or provide new enclosures at the discretion of the Engineer.

C. Conductor and cable markers:
1. Apply all conductor and cable markers before termination.
2. Heat-shrinkable tubing:
    a. Tubing shall be shrunk using a heat gun that produces low temperature heated air.
    b. Tubing shall be tight on the wire after it has been heated.
    c. Characters shall face the open panel and shall read from left to right or top to bottom.
    d. Marker shall start within 1/32 inch of the end of the stripped insulation point.

D. Conduit markers:
1. Furnish and install conduit markers for every conduit in the electrical system that is identified in the conduit schedule or part of the process system:
2. Mark conduits at the following locations:
    a. Each end of conduits that are greater than 10 feet in length.
    b. Where the conduit penetrates a wall or structure.
    c. Where the conduit emerges from the ground, slab, etc.
    d. The middle of conduits that are 10 feet or less in length.
3. Mark conduits after the conduits have been fully painted.
4. Position conduit markers so that they are easily read from the floor.
5. Attach non-metallic conduit markers with nylon cable ties:
    a. Provide ultraviolet resistant cable ties for conduit markers exposed to direct sunlight.
6. Mark conduits before construction review by Engineer for punch list purposes.
7. Label intrinsically safe conduits in accordance with the requirements of the NEC.

E. Signs and labeling:
1. Furnish and install warning signs on equipment that has more than one source of power.
    a. Warning signs to identify every panel and circuit number of the disconnecting means of all external power sources.
2. Place warning signs on equipment that has 120 VAC control voltage source used for interlocking.
    a. Identify panel and circuit number or conductor tag for control voltage source disconnecting means.

3.04 ERECTION, INSTALLATION, APPLICATION, CONSTRUCTION (NOT USED)

3.05 REPAIR/RESTORATION (NOT USED)

3.06 RE-INSTALLATION (NOT USED)

3.07 FIELD QUALITY CONTROL

A. Replace any nameplates, signs, conductor markers, cable markers, or raceway labels that in the sole opinion of the Engineer do not meet the Engineer's aesthetic requirements.

3.08 ADJUSTING (NOT USED)

3.09 CLEANING (NOT USED)

3.10 PROTECTION (NOT USED)

3.11 SCHEDULES (NOT USED)

END OF SECTION

SECTION 260573
ELECTRICAL POWER SYSTEM STUDIES

PART 1 - GENERAL

1.01 SCOPE

A. The contractor shall furnish short-circuit and protective device coordination studies as prepared by the equipment manufacturer's engineering services, or Owner approved equal.

B. The contractor shall furnish an Arc Flash Hazard Analysis Study per the requirements set forth in the current version of NFPA 70E -Standard for Electrical Safety in the Workplace. The arc flash hazard analysis shall be performed according to the IEEE Standard 1584, the IEEE Guide for Performing Arc-Flash Calculations.

C. The scope of the studies shall include all new electrical equipment.

1.02 RELATED SECTIONS

A. Drawings and general provisions of the Contract.

1.03 REFERENCES

A. Institute of Electrical and Electronics Engineers, Inc. (IEEE):
   1. IEEE 141 – Recommended Practice for Electric Power Distribution and Coordination of Industrial and Commercial Power Systems
   2. IEEE 242 – Recommended Practice for Protection and Coordination of Industrial and Commercial Power Systems
   3. IEEE 399 – Recommended Practice for Industrial and Commercial Power System Analysis
   4. IEEE 241 – Recommended Practice for Electric Power Systems in Commercial Buildings
   5. IEEE 1015 – Recommended Practice for Applying Low-Voltage Circuit Breakers Used in Industrial and Commercial Power Systems
   6. IEEE 1584 – Guide for Performing Arc-Flash Hazard Calculations

B. American National Standards Institute (ANSI):
   1. ANSI C57.12.00 – Standard General Requirements for Liquid-Immersed Distribution, Power, and Regulating Transformers
   2. ANSI C37.13 – Standard for Low Voltage AC Power Circuit Breakers Used in Enclosures
   3. ANSI C37.010 – Standard Application Guide for AC High Voltage Circuit Breakers Rated on a Symmetrical Current Basis
   4. ANSI C 37.41 – Standard Design Tests for High Voltage Fuses, Distribution Enclosed Single-Pole Air Switches, Fuse Disconnecting Switches and Accessories.

C. The National Fire Protection Association (NFPA)
   1. NFPA 70 -National Electrical Code, latest edition
   2. NFPA 70E – Standard for Electrical Safety in the Workplace

1.04 SUBMITTALS FOR REVIEW/APPROVAL

A. The studies shall be submitted to the Engineer prior to receiving final approval of the distribution equipment shop drawings and/or prior to release of equipment drawings for manufacturing. If formal completion of the study may cause delays in equipment shipments, approval from the Engineer may be obtained for a preliminary submittal of data to ensure that the selection of device ratings and characteristics will be satisfactory to properly select the distribution equipment. The formal study will be provided to verify preliminary findings.

1.05 SUBMITTALS FOR CONSTRUCTION

A. The results of the short-circuit, protective device coordination and arc flash hazard analysis studies shall be summarized in a final report. A minimum of five (5) bound copies of the complete final report shall be submitted. For large system studies, submittals requiring more than five (5) copies of the report will be provided without the section containing the computer

printout of the short-circuit input and output data. Electronic PDF copies of the report shall be provided upon request.

B. The report shall include the following sections:
   1. Executive Summary including Introduction, Scope of Work and Results/Recommendations.
   2. Short-Circuit Methodology Analysis Results and Recommendations
   3. Short-Circuit Device Evaluation Table
   4. Protective Device Coordination Methodology Analysis Results and Recommendations
   5. Protective Device Settings Table
   6. Time-Current Coordination Graphs and Recommendations
   7. Arc Flash Hazard Methodology Analysis Results and Recommendations including the details of the incident energy and flash protection boundary calculations, along with Arc Flash boundary distances, working distances, Incident Energy levels and Personal Protection Equipment levels.
   8. Arc Flash Labeling section showing types of labels to be provided. Section will contain descriptive information as well as typical label images.
   9. One-line system diagram that shall be computer generated and will clearly identify individual equipment buses, bus numbers used in the short-circuit analysis, cable and bus connections between the equipment, calculated maximum short-circuit current at each bus location, device numbers used in the time-current coordination analysis, and other information pertinent to the computer analysis.

1.06 QUALIFICATIONS

A. The short-circuit, protective device coordination and arc flash hazard analysis studies shall be conducted under the responsible charge and approval of a Registered Professional Electrical Engineer skilled in performing and interpreting the power system studies.

B. The Registered Professional Electrical Engineer shall be an employee of the equipment manufacturer or an approved engineering firm.

C. The Registered Professional Electrical Engineer shall have a minimum of five (5) years of experience in performing power system studies.

D. The approved engineering firm shall demonstrate experience with Arc Flash Hazard Analysis by submitting names of at least five actual arc flash hazard analyses it has performed in the past five years.

E. The engineering firm shall have a minimum of fifteen (15) years experience in performing power system studies.

1.07 COMPUTER ANALYSIS SOFTWARE

A. The studies shall be performed using SKM Systems Analysis Power*Tools for Windows (PTW) software program or ETAP Electrical Engineering Software.

PART 2 - MATERIALS

2.01 STUDIES

A. The contractor shall furnish an Arc Flash Hazard Analysis Study per NFPA 70E - Standard for Electrical Safety in the Workplace, reference Article 130.5 and Annex D. This study shall also include short-circuit and protective device coordination studies. All studies shall be prepared by the equipment manufacturer's engineering services, or Owner approved equal.

2.02 DATA

A. Contractor shall furnish all data as required for the power system studies. The Engineer performing the short-circuit, protective device coordination and arc flash hazard analysis studies shall furnish the Contractor with a listing of required data immediately after award of the contract. The Contractor shall expedite collection of the data to assure completion of the studies as required for final approval of the distribution equipment shop drawings and/or prior to the release of the equipment for manufacturing.

B. Source combination may include present and future motors and generators.

C. Load data utilized may include existing and proposed loads obtained from Contract Documents provided by Owner, or Contractor.

D. If applicable, include fault contribution of existing motors in the study. The Contractor shall obtain required existing equipment data, if necessary, to satisfy the study requirements.

2.03 SHORT-CIRCUIT ANALYSIS

A. Transformer design impedances shall be used when test impedances are not available.

B. Provide the following:
   1. Calculation methods and assumptions
   2. Selected base per unit quantities
   3. One-line diagram of the system being evaluated that clearly identifies individual equipment buses, bus numbers used in the short-circuit analysis, cable and bus connections between the equipment, calculated maximum short-circuit current at each bus location and other information pertinent to the computer analysis
   4. The study shall include input circuit data including electric utility system characteristics, source impedance data, conductor lengths, number of conductors per phase, conductor impedance values, insulation types, transformer impedances and X/R ratios, motor contributions, and other circuit information as related to the short-circuit calculations.
   5. Tabulations of calculated quantities including short-circuit currents, X/R ratios, equipment short-circuit interrupting or withstand current ratings and notes regarding adequacy or inadequacy of the equipment rating.
   6. Results, conclusions, and recommendations. A comprehensive discussion section evaluating the adequacy or inadequacy of the equipment must be provided and include recommendations as appropriate for improvements to the system.

C. For solidly-grounded systems, provide a bolted line-to-ground fault current study for applicable buses as determined by the engineer performing the study.

D. Protective Device Evaluation:
   1. Evaluate equipment and protective devices and compare to short circuit ratings
   2. Adequacy of switchgear, motor control centers, and panelboard bus bars to withstand short-circuit stresses
   3. The equipment manufacturer's engineering services shall notify Owner in writing of any circuit protective devices improperly rated for the calculated available fault current.

2.04 PROTECTIVE DEVICE TIME-CURRENT COORDINATION ANALYSIS

A. Protective device coordination time-current curves (TCC) shall be displayed on log-log scale graphs.

B. Include on each TCC graph, a complete title with descriptive device names.

C. Terminate device characteristic curves at a point reflecting maximum symmetrical or asymmetrical fault current to which the device is exposed.

D. Identify the device associated with each curve by manufacturer type, function, and, if applicable, tap, time delay, and instantaneous settings recommended.

E. Plot the following characteristics on the TCC graphs, where applicable:
   1. Electric utility's overcurrent protective device
   2. Medium voltage equipment overcurrent relays
   3. Medium and low voltage fuses including manufacturer's minimum melt, total clearing, tolerance, and damage bands
   4. Low voltage equipment circuit breaker trip devices, including manufacturer's tolerance bands
   5. Transformer full-load current, magnetizing inrush current, and ANSI through-fault protection curves
   6. Medium voltage conductor damage curves

7. Ground fault protective devices, as applicable
8. Pertinent motor starting characteristics and motor damage points, where applicable
9. Pertinent generator short-circuit decrement curve and generator damage point

F. The largest feeder circuit breaker in each motor control center and applicable panelboard.

G. Provide adequate time margins between device characteristics such that selective operation is provided, while providing proper protection.

H. Provide the following:
   1. A One-line diagram shall be provided which clearly identifies individual equipment buses, bus numbers, device identification numbers and the maximum available short-circuit current at each bus when known.
   2. A sufficient number of log-log plots shall be provided to indicate the degree of system protection and coordination by displaying the time-current characteristics of series connected overcurrent devices and other pertinent system parameters.
      a. Computer printouts shall accompany the log-log plots and will contain descriptions for each of the devices shown, settings of the adjustable devices, and device identification numbers to aid in locating the devices on the log-log plots and the system one-line diagram.
      b. The study shall include a separate, tabular printout containing the recommended settings of all adjustable overcurrent protective devices, the equipment designation where the device is located, and the device number corresponding to the device on the system one-line diagram
      c. A discussion section which evaluates the degree of system protection and service continuity with overcurrent devices, along with recommendations as required for addressing system protection or device coordination deficiencies.
   3. The equipment manufacturer's engineering services shall notify Owner in writing of any significant deficiencies in protection and/or coordination. Provide recommendations for improvements.

2.05 ARC FLASH HAZARD ANALYSIS

A. The arc flash hazard analysis shall be performed according to the IEEE 1584 equations that are presented in NFPA 70E, Annex D. The arc flash hazard analysis shall be performed in conjunction with the short-circuit analysis (Section 2.03) and the protective device time-current coordination analysis (Section 2.04)

B. The flash protection boundary and the incident energy shall be calculated at significant locations in the electrical distribution system (switchboards, switchgear, motor-control centers, panelboards, busway and splitters) where work could be performed on energized parts.

C. Working distances shall be based on IEEE 1584. The calculated arc flash protection boundary shall be determined using those working distances.

D. When appropriate, the short circuit calculations and the clearing times of the phase overcurrent devices will be retrieved from the short-circuit and coordination study model. Ground overcurrent relays should not be taken into consideration when determining the clearing time when performing incident energy calculations.

E. The short-circuit calculations and the corresponding incident energy calculations for multiple system scenarios must be compared and the greatest incident energy must be uniquely reported for each equipment location in a single table. Calculations must be performed to represent the maximum and minimum contributions of fault current magnitude for normal and emergency operating conditions. The minimum calculation will assume that the utility contribution is at a minimum. Conversely, the maximum calculation will assume a maximum contribution from the utility. Calculations shall take into consideration the parallel operation of synchronous generators with the electric utility, where applicable as well as any stand-by generator applications.

F. The Arc-Flash Hazard Analysis shall be performed utilizing mutually agreed upon facility operational conditions, and the final report shall describe, when applicable, how these conditions differ from worst-case bolted fault conditions.

G. The incident energy calculations must consider the accumulation of energy over time when performing arc flash calculations on buses with multiple sources. Iterative calculations must take into account the changing current contributions, as the sources are interrupted or decremented with time. Fault contribution from motors should be decremented as follows:
   1. Fault contribution from induction motors should not be considered beyond 5 cycles.

H. For each piece of ANSI rated equipment with an enclosed main device, two calculations shall be made. A calculation shall be made for the main cubicle, sides, or rear; and shall be based on a device located upstream of the equipment to clear the arcing fault. A second calculation shall be made for the front cubicles and shall be based on the equipment's main device to clear the arcing fault. For all other non-ANSI rated equipment, only one calculation shall be required and it shall be based on a device located upstream of the equipment to clear the arcing fault.

I. When performing incident energy calculations on the line side of a main breaker (as required per above), the line side and load side contributions must be included in the fault calculation.

J. Mis-coordination should be checked amongst all devices within the branch containing the immediate protective device upstream of the calculation location and the calculation should utilize the fastest device to compute the incident energy for the corresponding location.

K. Arc Flash calculations shall be based on actual overcurrent protective device clearing time. A maximum clearing time of 2 seconds will be used based on IEEE 1584 section B.1.2. Where it is not physically possible to move outside of the flash protection boundary in less than 2 seconds during an arc flash event, a maximum clearing time based on the specific location shall be utilized.

L. Provide the following:
   1. Results of the Arc-Flash Hazard Analysis shall be submitted in tabular form, and shall include device or bus name, bolted fault and arcing fault current levels, flash protection boundary distances, working distances and AFIE (Arc Flash Incident Energy) levels.
   2. The Arc-Flash Hazard Analysis shall report incident energy values based on recommended device settings for equipment within the scope of the study.
   3. The Arc-Flash Hazard Analysis shall include recommendations to reduce AFIE levels and enhance worker safety.

PART 3 - EXECUTION

3.01 FIELD ADJUSTMENT

A. Contractor shall adjust relay and protective device settings according to the recommended settings table provided by the coordination study.

B. Contractor shall make minor modifications to equipment as required to accomplish conformance with short circuit and protective device coordination studies.

C. The equipment manufacturer's engineering services shall notify Owner in writing of any required major equipment modifications.

3.02 ARC FLASH LABELS

A. The equipment manufacturer's engineering services shall provide a 4.0 in. x 4.0 in. Brady thermal transfer type label of high adhesion polyester for each work location analyzed.

B. The labels shall be designed according to the following standards:
   1. UL969 – Standard for Marking and Labeling Systems
   2. ANSI Z535.4 – Product Safety Signs and Labels
   3. NFPA 70 (National Electric Code) – Article 110.16

C. The label shall include the following information:
   1. System Voltage
   2. Flash protection boundary

3. Arc Flash Incident energy value (cal/cm²)
4. Limited, restricted, and prohibited Approach Boundaries
5. Study report number and issue date

D. Labels shall be printed by a thermal transfer type printer, with no field markings.

E. Arc flash labels shall be provided for equipment as identified in the study and the respective equipment access areas per the following:
   1. Floor Standing Equipment - Labels shall be provided on the front of each individual section. Equipment requiring rear and/or side access shall have labels provided on each individual section access area. Equipment line-ups containing sections with multiple incident energy and flash protection boundaries shall be labeled as identified in the Arc Flash Analysis table.
   2. Wall Mounted Equipment – Labels shall be provided on the front cover or a nearby adjacent surface, depending upon equipment configuration.
   3. General Use Safety labels shall be installed on equipment in coordination with the Arc Flash labels. The General Use Safety labels shall warn of general electrical hazards associated with shock, arc flash, and explosions, and instruct workers to turn off power prior to work.

F. Labels shall be installed by the manufacturer or field installed by the Contractor.

END OF SECTION

SECTION 260850
FIELD ELECTRICAL ACCEPTANCE TESTS

PART 1 – GENERAL

1.01 SUMMARY

A. Section includes:

1. Responsibilities for testing the electrical installation.
2. Adjusting and calibration.
3. Acceptance tests.

B. Related sections:
1. Section 01 33 00 - Submittal Procedures.
2. Section 26 05 00 - Common Work Results for Electrical.
3. Section 26 05 26 - Grounding and Bonding.

C. Copyright information:
1. Some portions of this Section are copyrighted by the InterNational Electrical Testing Association, Inc (NETA). See NETA publication ATS for details.

1.02 REFERENCES

A. As specified in Section 26 05 00.

B. American National Standards Institute (ANSI).

C. Institute of Electrical and Electronics Engineers (IEEE):
1. 43 - IEEE Recommended Practice for Testing Insulation Resistance of Rotating Machinery.
2. 81 - IEEE Guide for Measuring Earth Resistivity, Ground Impedance, and Earth Surface Potentials of a Grounding System.
3. 95 - IEEE Recommended Practice for Insulation Testing of AC Electric Machinery (2300 V and Above) With High Direct Voltage.
4. 421.3 - IEEE Standard for High-Potential Test Requirement for Excitation Systems for Synchronous Machines.
5. 450 - IEEE Recommended Practice for Maintenance, Testing, and Replacement of Vented Lead-Acid Batteries for Stationary Applications.
6. 1106 - IEEE Recommended Practice for Installation, Maintenance, Testing, and Replacement of Vented Nickel-Cadmium Batteries for Stationary Applications.
7. 1188 - IEEE Recommended Practice for Maintenance, Testing, and Replacement of Valve-Regulated Lead-Acid (VRLA) Batteries for Stationary Applications.
8. C57.13 - IEEE Standard Requirements for Instrument Transformers.
9. C57.13.1 – IEEE Guide for Field Testing of Relaying Current Transformers.
10. C57.13.3 - IEEE Guide for Grounding of Instrument Transformer Secondary Circuits and Cases.
11. C57.104 - IEEE Guide for the Interpretation of Gases Generated in Oil- Immersed Transformers.

D. Insulated Cable Engineer’s Association (ICEA).

E. InterNational Electrical Testing Association (NETA).
1. ATS (latest edition) Standard for Standard for Acceptance Testing Specifications for Electrical Power Equipment and Systems.

F. International Electrotechnical Commission (IEC).

G. Manufacturer’s testing recommendations and instruction manuals.

H. National Fire Protection Association (NFPA):
1. 70 – National Electrical Code (NEC).
2. 110 - Standard for Emergency and Standby Power Systems.

I. National Institute of Standards and Technology (NIST).

J. Specification sections for the electrical equipment being tested.

K. Shop drawings.

1.03 DEFINITIONS

A. As specified in Section 26 05 00.

B. Specific definitions:
   1. Testing laboratory: The organization performing acceptance tests.

1.04 SYSTEM DESCRIPTION

A. Testing of all electrical equipment installed under this Contract in accordance with the manufacturer's requirements and as specified in this Section.

B. Conduct all tests in the presence of the Engineer or the Engineer's representative:
   1. Engineer will witness all visual, mechanical and electrical tests, and inspections.

C. The testing and inspections shall verify that the equipment is operational within the tolerances required and expected by the manufacturer, and these Specifications.

D. Responsibilities:
   1. Contractor responsibilities:
      a. Ensure that all resources are made available for testing, and that all testing requirements are met.
   2. Electrical subcontractor responsibilities:
      a. Perform routine tests during installation.
      b. Demonstrate operation of electrical equipment.
      c. Commission the electrical installation.
      d. Provide the necessary services during testing, and provide these services to the testing laboratory, Contractor, and other subcontractors, including but not limited to:
         1) Providing electrical power as required.
         2) Operating of electrical equipment in conjunction with testing of other equipment.
         3) Activating and shutting down electrical circuits.
         4) Making and recording electrical measurements.
         5) Replacing blown fuses.
         6) Installing temporary jumpers.
   3. Testing laboratory responsibilities:
      a. Perform all acceptance tests specified in this Section.
      b. Provide all required equipment, materials, labor, and technical support during acceptance tests.

E. Upon completion of testing or calibration, attach a label to all serviced devices:
   1. The label shall indicate the date serviced and the company that performed the service.

1.05 SUBMITTALS

A. Furnish submittals as specified in Sections 01 33 00 and 26 05 00.

B. Manufacturers' testing procedures:
   1. Submit manufacturers' recommended testing procedures and acceptable test results for review by the Engineer.

C. Test report:
   1. Test reports shall be based on NETA's latest Acceptance Testing Specifications having a sign-off, pass/fail data filed for each line item covered by NETA's Acceptance Testing Specifications latest edition.
   2. Include the following:
      a. Summary of Project.
      b. Description of equipment tested.
      c. Description of tests performed.
      d. Test results.

e. Conclusions and recommendations.
f. Completed test forms.
g. List of test equipment used and calibration dates.

D. Testing laboratory qualifications:
1. Submit a complete resume and statement of qualifications from the proposed testing laboratory detailing their experiences in performing the tests specified:
2. Testing organization shall be corporately and financially independent of the supplier, producer and installer of the equipment, who has been regularly engaged in the testing of equipment for a period of at least 10 years. All testing shall be conducted under the direct supervision of an electrical engineer, registered in the State of California. This registered electrical engineer will prepare and sign test reports with values, recommendations, and comments.
3. Testing equipment required to conduct the specified tests shall be furnished by the testing organization. Testing equipment shall be in good working condition and comply with the requirements of this Specification and applicable industry standards.
4. Testing shall be done in accordance with the manufacturer's instructions, these Specifications, and applicable NETA Acceptance Testing Specifications, NEMA, ANSI, NFPA, and ASTM Standards. Forms shall include space for ENGINEER sign off at time of test. Testing organization shall meet Federal OSHA criteria for accreditation of testing laboratories, Title 29, Part 1907, 1910 and 1936. Membership in the InterNational Electrical Testing Association constitutes proof of meeting such criteria.
5. The testing organization shall cooperate with any manufacturer's representative that may be retained by the CONTRACTOR. Testing organization shall be Cutler Hammer; Electro test; Power Systems; General Electric; or equal NETA approved testing company.

E. Division of responsibilities:
1. Submit a list identifying who is responsible for performing each portion of the testing.

1.06 QUALITY ASSURANCE

A. As specified in Section 26 05 00.

B. Testing laboratory qualifications:
1. The testing laboratory shall be an independent testing company.
2. Selection of the testing laboratory and testing personnel is subject to approval by the Engineer based on testing experience and certifications of the individuals and testing capabilities of the organization.

1.07 DELIVERY, STORAGE, AND PROTECTION (NOT USED)

1.08 PROJECT OR SITE CONDITIONS

A. As specified in Section 26 05 00.

1.09 SEQUENCING

A. At least 30 days before commencement of the acceptance tests, submit the manufacturer’s complete field testing procedures to the Engineer and to the testing laboratory, complete with expected test results and tolerances for all equipment to be tested.

B. Perform testing in the following sequence:
1. Perform routine tests as the equipment is installed including:
a. Insulation-resistance tests.
b. Continuity tests.
c. Rotational tests.
2. Adjusting and preliminary calibration.
3. Acceptance tests.
4. Demonstration.
5. Commissioning and plant start-up.

1.10 SCHEDULING (NOT USED)

1.11 WARRANTY

A. As specified in Section 26 05 00.

1.12 SYSTEM START-UP (NOT USED)

1.13 OWNER'S INSTRUCTIONS (NOT USED)

1.14 MAINTENANCE (NOT USED)

PART 2 – PRODUCTS (NOT USED)

PART 3 – EXECUTION

3.01 EXAMINATION (NOT USED)

3.02 PREPARATION

A. Test instrument calibration:
   1. Utilize a testing laboratory with a calibration program which maintains all applicable test instrumentation within rated accuracy.
   2. The accuracy shall be traceable to the NIST in an unbroken chain.
   3. Calibrate instruments in accordance with the following frequency schedule:
      a. Field instruments: 6 months maximum.
      b. Laboratory instruments: 12 months maximum.
      c. Leased specialty equipment where the accuracy is guaranteed by the lessor (such as Doble): 12 months maximum.
   4. Dated calibration labels shall be visible on all test equipment.
   5. Maintain an up-to-date instrument calibration record for each test instrument:
      a. The records shall show the date and results of each calibration or test.
   6. Maintain an up-to-date instrument calibration instruction and procedure for each test instrument.

B. Do not begin testing until the following conditions have been met:
   1. All instruments required are available and in proper operating condition.
   2. All required dispensable materials such as solvents, rags, and brushes are available.
   3. All equipment handling devices such as cranes, vehicles, chain falls and other lifting equipment are available or scheduled.
   4. All instruction books, calibration curves, or other printed material to cover the electrical devices are available.
   5. Data sheets to record all test results are available.

C. Engine generator tests:
   1. The following individuals must be present and remain at the site during the entire field testing of the engine generator:
      a. Manufacturer’s field engineer for the voltage regulator.
      b. Manufacturer’s field engineer for the governor and governor controller.
      c. Manufacturer’s field engineer for the switchgear.
      d. Load bank operator.
      e. Electrical contractor.
      f. Electric utility’s field engineer.

3.03 INSTALLATION (NOT USED)

3.04 ERECTION, INSTALLATION, APPLICATION, CONSTRUCTION (NOT USED)

3.05 REPAIR/RESTORATION (NOT USED)

3.06 RE-INSTALLATION (NOT USED)

3.07 FIELD QUALITY CONTROL

A. Dry type transformers:
   1. Visual and mechanical inspection:

a. Compare equipment nameplate data with the Contract Documents.
b. Inspect physical and mechanical condition.
c. Inspect anchorage, alignment, and grounding.
d. Verify that resilient mounts are free and that any shipping brackets have been removed.
e. Inspect equipment for cleanliness.
f. Inspect bolted electrical connections for high resistance using one of the following methods:
    1) Use of low-resistance ohmmeter.
    2) Verify tightness of accessible bolted electrical connections by the calibrated torque wrench method:
        (a) Refer to manufacturer's instructions for proper foot-pound levels or NETA ATS tables.
g. Verify that as-left tap connections are as specified.

2. Electrical tests:
    a. Perform resistance measurements through bolted connections with a low- resistance ohmmeter.
    b. Perform insulation-resistance tests winding-to-winding and each winding- to-ground:
        1) Apply voltage in accordance with manufacturer's published data.
            (a) Refer to NETA ATS tables in the absence of manufacturer's published data.
    c. Calculate dielectric absorption ration or polarization index.
    d. Perform turns ratio tests at all tap positions.
    e. Verify correct secondary voltage, phase-to-phase and phase-to-neutral after energization and before loading.

3. Test values:
    a. Compare bolted connection resistance values to values of similar connections:
        1) Investigate values which deviate from those of similar bolted connections by more than 50 percent of the lowest value.
    b. Bolt-torque levels shall be in accordance with manufacturer's published data:
        1) Refer to NETA ATS tables in the absence of manufacturer's published data.
    c. Tap connections are left as found unless otherwise specified.
    d. Minimum insulation-resistance values of transformer insulation shall be in accordance with manufacturer's published data:
        1) Refer to NETA ATS tables in the absence of manufacturer's published data.
        2) Investigate insulation values less than the allowable minimum.
    e. The dielectric absorption ratio or polarization index shall not be less than 1.0.
    f. Turns-ratio results should not deviate more than 1/2 percent from either the adjacent coils or calculated ratio.
    g. Phase-to-phase and phase-to-neutral secondary voltages shall be in agreement with nameplate data.

B. Low voltage cables, 600 volt maximum:
1. Visual and mechanical inspection:
    a. Compare cable data with the Drawings and Specifications.
    b. Inspect exposed sections of cable for physical damage and correct connection as indicated on the Drawings.
    c. Inspect bolted electrical connections for high resistance by 1 of the following methods:
        1) Use of low-resistance ohmmeter.
        2) Verify tightness of accessible bolted electrical connections by the calibrated torque wrench method:
            (a) Refer to manufacturer's instructions for proper foot-pound levels or NETA ATS tables.
    d. Inspect compression applied connectors for correct cable match and indentation.

e. Inspect for correct identification and arrangement.
f. Inspect cable jacket insulation and condition.

2. Electrical tests:
   a. Perform resistance measurements through bolted connections with a low- resistance ohmmeter.
   b. Perform insulation resistance test on each conductor with respect to ground and adjacent conductors:
      1) Applied potential shall be 500 volts dc for 300 volt rated cable and 1,000 volts dc for 600 volt rated cable.
      2) Test duration shall be 1 minute.
   c. Perform continuity tests to insure correct cable connection.
   d. Verify uniform resistance of parallel conductors.
3. Test values:
   a. Compare bolted connection resistance values to values of similar connections:
      1) Investigate values which deviate from those of similar bolted connections by more than 50 percent of the lowest value.
   b. Insulation-resistance values shall be in accordance with manufacturer's published data:
      1) Refer to NETA ATS tables in the absence of manufacturer's published data.
      2) Investigate values of insulation-resistance less than the allowable minimum.
      3) Investigate values of insulation-resistance where there is a great deviation between of values between conductors.
   c. Cable shall exhibit continuity.
   d. Investigate deviations in resistance between parallel conductors.

C. Low voltage molded case and insulated case circuit breakers:
1. Visual and mechanical inspection:
   a. Compare equipment nameplate data with the Contract Documents.
   b. Inspect physical and mechanical condition.
   c. Inspect anchorage and alignment.
   d. Verify that all maintenance devices are available for servicing and operating the breaker.
   e. Verify the unit is clean.
   f. Verify the arc chutes are intact.
   g. Inspect moving and stationary contacts for condition and alignment.
   h. Verify that primary and secondary contact wipe and other dimensions vital to satisfactory operation of the breaker are correct.
   i. Perform all mechanical operator and contact alignment tests on both the breaker and its operating mechanism in accordance with manufacturers published data.
   j. Operate circuit breaker to ensure smooth operation.
   k. Inspect bolted electrical connections for high resistance by one of the following methods:
      1) Use of low-resistance ohmmeter.
      2) Verify tightness of accessible bolted electrical connections by the calibrated torque wrench method:
         (a) Refer to manufacturer's instructions for proper foot-pound levels or NETA ATS tables.
   l. Inspect operating mechanism, contacts, and arc chutes in unsealed units.
   m. Verify cell fit and element alignment.
   n. Verify racking mechanism operation.
   o. Verify appropriate lubrication on moving current-carrying parts and on moving and sliding surfaces.
   p. Perform adjustments for final protective device settings in accordance with the coordination study.

q. Record as-found and as-left operation counter readings.

2. Electrical tests:
   a. Perform resistance measurements through bolted connections with a low- resistance ohmmeter.
   b. Perform insulation-resistance tests for 1 minute on each pole, phase-to- phase and phase-to-ground with the circuit breaker closed and across each open pole:
      1) Apply voltage in accordance with manufacturer's published data.
      2) Refer to NETA ATS tables in the absence of manufacturer's published data.
   c. Perform a contact/pole-resistance test.
   d. Determine long-time pickup and delay by primary current injection.
   e. Determine short-time pickup and delay by primary current injection.
   f. Determine ground-fault pickup and delay by primary current injection.
   g. Determine instantaneous pickup value by primary current injection.
   h. Perform minimum pickup voltage tests on shunt trip and close coils in accordance with manufacturer's published data.
   i. Verify correct operation of any auxiliary features such as trip and pickup indicators, zone interlocking, electrical close and trip operation, trip-free, anti-pump function and trip unit battery condition:
      1) Reset all trip logs and indicators.
   j. Verify operation of charging mechanism.
3. Test values:
   a. Compare bolted connection resistance values to values of similar connections:
      1) Investigate values which deviate from those of similar bolted connections by more than 50 percent of the lowest value.
   b. Bolt-torque levels shall be in accordance with manufacturer's published data:
      1) Refer to NETA ATS tables in the absence of manufacturer's published data.
   c. Insulation-resistance values shall be in accordance with manufacturer's published data:
      1) Refer to NETA ATS tables in the absence of manufacturer's published data.
      2) Investigate values of insulation-resistance less than the allowable minimum.
   d. Microhm or dc millivolt drop values shall not exceed the high levels of the normal range as indicated in the manufacturer's published data:
      1) If manufacturer's data is not available, investigate any values which deviate from adjacent poles or similar breakers by more than 50 percent of the lowest value.
   e. Insulation-resistance values of control wiring shall not be less than 2 megohms.
      1) Long-time pickup values shall be as specified, and the trip characteristic shall not exceed manufacturer's published time-current characteristic tolerance band including adjustment factors:If manufacturer's curves are not available, trip times shall not exceed the value shown in NETA ATS tables.
   f. Short-time pickup values shall be as specified, and the trip characteristic shall not exceed manufacturer's published time-current tolerance band.
   g. Ground fault pickup values shall be as specified, and the trip characteristic shall not exceed manufacturer's published time-current tolerance band.
   h. Instantaneous pickup values shall be as specified and within manufacturer's published tolerances:
      1) Refer to NETA ATS tables in the absence of manufacturer's published data.
   i. Pickup values and trip characteristics shall be within manufacturer's published tolerances.
   j. Minimum pickup voltage of the shunt trip and close coils shall conform to the manufacturer's published data:
      1) Refer to NETA ATS tables in the absence of manufacturer's published data.
   k. Breaker open, close, trip, trip-free, anti-pump, and auxiliary features shall function as designed.

l. The charging mechanism shall operate in accordance with manufacturer's published data.

D. Grounding systems:
1. Visual and mechanical inspection:
a. Inspect ground system for compliance with that indicated on the Drawings, specified in Specifications, and in the NEC.
b. Inspect physical and mechanical condition.
c. Inspect bolted electrical connections for high resistance using one of the following methods:
1) Use of low-resistance ohmmeter.
2) Verify tightness of accessible bolted electrical connections by calibrated torque wrench method:
(a) Refer to manufacturer's instructions for proper foot-pound levels or NETA ATS tables.
d. Inspect anchorage.
2. Electrical tests:
a. Perform resistance measurements through bolted connections with a low- resistance ohmmeter.
b. Perform fall of potential test or alternative test in accordance with IEEE 81 on the main grounding electrode or system.
c. Perform point-to-point tests to determine the resistance between the main grounding system and all major electrical equipment frames, the system neutral and any derived neutral points.
3. Test values:
a. Grounding system electrical and mechanical connections shall be free of corrosion.
b. Compare bolted connection resistance values to values of similar connections:
1) Investigate values which deviate from those of similar bolted connections by more than 50 percent of the lowest value.
c. Bolt-torque levels shall be in accordance with manufacturer's published data:
1) Refer to NETA ATS tables in the absence of manufacturer's published data.
d. The resistance between the main grounding electrode and ground shall be as specified in Section 26 05 26. Investigate point-to-point resistance values that exceed 0.5 ohm.

E. Rotating machinery:
1. Visual and mechanical inspection:
a. Compare equipment nameplate information with the Contract Documents.
b. Inspect physical and mechanical condition.
c. Inspect anchorage, alignment, and grounding.
d. Inspect air baffles, filter media, cooling fans, slip rings, brushes, brush rigging, and shaft current discharge devices.
e. Inspect bolted electrical connections for high resistance using one of the following methods:
1) Use of low-resistance ohmmeter.
2) Verify tightness of accessible bolted electrical connections by calibrated torque wrench method:
(a) Refer to manufacturer's instructions for proper foot-pound levels or NETA ATS tables.
f. Perform special tests such as gap spacing and machine alignment if applicable.
g. Manually rotate the rotor and check for problems with the bearings or shaft.
h. Rotate the shaft and measure and record the shaft extension runout.
i. Verify correct application of appropriate lubrication and lubrication systems.
j. Verify that resistance temperature detector (RTD) circuits conform to that indicated on the Drawings.

2. Electrical tests:
    a. Perform resistance measurements through bolted connections with a low- resistance ohmmeter.
    b. Perform insulation-resistance test in accordance with IEEE 43:
        1) On motors 200 horsepower and smaller, test duration shall be 1 minute. Calculate dielectric absorption ratio.
        2) On motors larger than 200 horsepower, test duration shall be 10 minutes. Calculate polarization index.
    c. Perform dc dielectric withstand voltage tests on machines rated at 2,300 volts and greater in accordance with IEEE 95.
        1) IEEE 95 for dc dielectric withstand voltage tests.
        2) NEMA MG1 for ac dielectric withstand voltage tests.
    d. Perform phase-to-phase stator resistance test on machines rated at 2,300 volts and greater.
    e. Perform insulation-resistance test on insulated bearings in accordance with manufacturer's published data.
    f. Test surge protection devices as specified in this Section.
    g. Test motor starter as specified in this Section.
    h. Perform resistance tests on resistance temperature detector (RTD) circuits.
    i. Verify operation of motor space heater.
    j. Perform vibration test.
    k. Perform a rotation test to ensure correct shaft rotation.
    l. Measure running current and evaluate relative to load conditions and nameplate full-load amperes.
3. Test values:
    a. Inspection:
        1) Air baffles shall be clean and installed in accordance with the manufacturer's published data.
        2) Filter media shall be clean and installed in accordance with the manufacturer's published data.
        3) Cooling fans shall operate.
        4) Slip ring alignment shall be within manufacturer's published tolerances.
        5) Brush alignment shall be within manufacturer's published tolerances.
        6) Brush rigging shall be within manufacturer's published tolerances.
    b. Compare bolted connection resistance values to values of similar connections:
        1) Investigate values which deviate from those of similar bolted connections by more than 50 percent of the lowest value.
    c. Bolt-torque levels shall be in accordance with manufacturer's published data:
        1) Refer to NETA ATS tables in the absence of manufacturer's published data.
    d. Air-gap spacing and machine alignment shall be in accordance with manufacturer's published data.
    e. The recommended minimum insulation-resistance (IR1 min) test results in megohms shall be as specified in this Section.
        1) The polarization index value shall not be less than 2.0.
        2) The dielectric absorption ratio shall not be less than 1.4.
    f. If no evidence of distress or insulation failure is observed by the end of the total time of voltage application during the dielectric withstand test, the test specimen is considered to have passed the test.
    g. Investigate phase-to-phase stator resistance values that deviate by more than 10 percent.
    h. Power factor or dissipation factor values shall be compared to manufacturer's published data:
        1) In the absence of manufacturer's published data compare values of similar machines.

i. Tip-up values shall indicate no significant increase in power factor.
j. If no evidence of distress, insulation failure, or waveform nesting is observed by the end of the total time of voltage application during the surge comparison test, the test specimen is considered to have passed the test.
k. Bearing insulation-resistance measurements shall be within manufacturer's published tolerances:
    1) In the absence of manufacturer's published data compare values of similar machines.
l. Test results of surge protection devices shall be as specified in this Section.
m. Test results of motor starter equipment shall be as specified in this Section.
n. RTD circuits shall conform to the design intent and machine protection device manufacturer's published data.
o. Heaters shall be operational.
p. Vibration amplitudes shall not exceed values in NETA ATS tables:
    1) If values exceed those in the NETA ATS tables, perform a complete vibration analysis.
q. Machine rotation should match required rotation of connected load.
r. Running phase-to-phase voltages should be within 1.0 percent. Running currents shall be balanced and proportional to load condition and nameplate data.

F. Surge arresters, low-voltage:
1. Visual and mechanical inspection:
    a. Compare equipment nameplate data with the Contract Documents.
    b. Inspect physical and mechanical condition.
    c. Inspect anchorage, alignment, grounding, and clearances.
    d. Verify the arresters are clean.
    e. Inspect bolted electrical connections for high resistance using one of the following methods:
        1) Use of low-resistance ohmmeter.
        2) Verify tightness of accessible bolted electrical connections by the calibrated torque wrench method:
            (a) Refer to manufacturer's instructions for proper foot-pound levels or NETA ATS tables.
    f. Verify that the ground lead on each device is individually attached to a ground bus or ground electrode.
    g. Verify that stroke counter is correctly mounted and electrically connected, if applicable.
    h. Record stroke counter reading.
2. Electrical tests:
    a. Perform resistance measurements through bolted connections with a low- resistance ohmmeter.
    b. Perform an insulation-resistance test on each arrester, phase terminal- to- ground:
        1) Apply voltage in accordance with manufacturers published data.
        2) Refer to NETA ATS tables in the absence of manufacturer's published data.
    c. Test grounding connection as specified in this Section.
3. Test values:
    a. Compare bolted connection resistance values to values of similar connections:
        1) Investigate values which deviate from those of similar bolted connections by more than 50 percent of the lowest value.
    b. Bolt-torque levels shall be in accordance with manufacturer's published data:
        1) Refer to NETA ATS tables in the absence of manufacturer's published data.
    c. Insulation-resistance values shall be in accordance with manufacturer's published data:
        1) Refer to NETA ATS tables in the absence of manufacturer's published data.

2) Investigate insulation values less than the allowable minimum.

d. Resistance between the arrester ground terminal and the ground system shall be less than 0.5 ohm.

G. Switchboards, MCCs & Panelboards

1. Visual and mechanical inspection:
   a. Compare bus arrangement with that indicated on the Drawings and specified in the Specifications.
   b. Inspect physical and mechanical condition.
   c. Inspect anchorage, alignment, and grounding.
   d. Verify the support insulators are clean.
   e. Inspect bolted electrical connections for high resistance using one of the following methods:
      1) Use of low-resistance ohmmeter.
      2) Verify tightness of accessible bolted electrical connections by calibrated torque wrench method:
         (a) Refer to manufacturer's instructions for proper foot-pound levels or NETA ATS tables.
2. Electrical tests:
   a. Perform resistance measurements through bolted connections with a low- resistance ohmmeter.
   b. Measure insulation-resistance of each bus, phase- to- ground with other phases grounded:
      1) Apply voltage in accordance with manufacturer's published data.
      2) Refer to NETA ATS tables in the absence of manufacturer's published data.
   c. Perform dielectric withstand voltage test on each bus phase, phase- to- ground with other phases grounded. Potential application shall be for 1 minute.
3. Test values:
   a. Compare bolted connection resistance values to values of similar connections:
      1) Investigate values which deviate from those of similar connections by more than 50 percent of the lowest value.
   b. Bolt-torque levels shall be in accordance with manufacturer's published data:
      1) Refer to NETA ATS tables in the absence of manufacturer's published data.
   c. Insulation-resistance values shall be in accordance with manufacturer's published data:
      1) Refer to NETA ATS tables in the absence of manufacturer's published data.
   d. If no evidence of distress or insulation failure is observed at the end of the total time of voltage application during the dielectric withstand test, the test specimen is considered to have passed the test.

H. Single Engine generator:

1. Test per manufacturer's instructions in addition to the requirements below.
2. Visual and mechanical inspection:
   a. Compare equipment nameplate data with the Contract Documents.
   b. Inspect physical and mechanical condition.
   c. Inspect anchorage, alignment, and grounding.
   d. Verify the unit is clean.
3. Electrical and mechanical tests:
   a. Perform insulation-resistance tests in accordance with IEEE 43:
      1) Machines larger than 150 kilowatts: Test duration shall be 10 minutes. Calculate polarization index.
      2) Machines 150 kilowatts and less: Test duration shall be 1 minute. Calculate the dielectric-absorption rate.
   b. Test protective relay devices as specified in this Section.

c. Verify phase rotation, phasing, and synchronized operation as required by the application.
d. Functionally test engine shutdown for low oil pressure, overtemperature, overspeed, and other protection features as applicable.
e. Perform vibration test for each main bearing cap.
f. Conduct performance test in accordance with NFPA 110.
g. Verify correct functioning of governor and regulator.
h. Load bank testing:
    1) Provide a resistive load bank to test the operation of the engine generator.
    2) Load bank shall be capable of loading the engine generator to its full nameplate kilowatt rating at unity power factor.
    3) Load steps shall simulate the plant load steps used in sizing the engine generator.
        (a) Record voltage and frequency response at each step with a data logging instrument that has an 8 millisecond response time.
    4) Test run at full nameplate kilowatt rating for a minimum of 4 hours:
        (a) Record at 10 minute intervals:
            (1) Voltage.
            (2) Frequency.
            (3) Current.
            (4) Power factor.
            (5) Engine oil pressure.
            (6) Engine oil temperature.
            (7) Air inlet temperature.
            (8) Radiator discharge temperature.
            (9) Engine coolant temperature.
            (10) Vibration levels at each main bearing cap.

4. Test values:
    a. Anchorage, alignment, and grounding should be in accordance with manufacturer's published data and system design.
    b. The dielectric absorption ratio or polarization index shall be compared to previously obtained results and should not be less than 1.0. The recommended minimum insulation (IR1 min) test results in megohms shall be corrected to 40 degrees Celsius and read as follows:
        1) IR1 min equals kilovolt + 1 for most windings made before 1970, all field windings, and others not described below.
            (a) Kilovolt is the rated machine terminal-to-terminal voltage in rms kilovolt.
        2) IR1 min equals 100 megohms for most dc armature and ac windings built after 1970 (form-wound coils).
        3) IR1 min equals 5 megohms for most machines and random-wound stator coils and form-wound coils rated below 1 kilovolt.
            (a) Dielectric withstand voltage and surge comparison tests shall not be performed on machines having lower values than those indicated above.
    c. The polarization index value shall not be less than 2.0.
    d. The dielectric absorption ratio shall not be less than 1.4.
    e. Protective relay device test results shall be as specified in this Section.
    f. Phase rotation, phasing, and synchronizing shall be in accordance with system design requirements.
    g. Low oil pressure, over temperature, over speed, and other protection features shall operate in accordance with manufacturer's published data and system design requirements.
    h. Vibration levels shall be in accordance with manufacturer's published data and shall be compared to baseline data.
    i. Performance tests shall conform to manufacturer's published data and NFPA 110.

j. Governor and voltage regulator shall operate in accordance with manufacturer's published data and system design requirements:
   1) Steady state voltage regulation shall be within 0.5 percent of set point.
   2) The output voltage of the generator shall not fall below 10 percent of the power system nominal rating for more than 5 seconds.
   3) The output voltage of the generators shall not exceed the power system nominal rating at any time.
   4) Steady state frequency regulation shall be within 59.5 hertz to 60.5 hertz.
   5) Frequency variations shall not exceed 2 hertz from 60 hertz for more than 2 seconds.

I. Automatic transfer switches:
   1. Visual and mechanical inspection:
      a. Compare equipment nameplate data with the Contract Documents.
      b. Inspect physical and mechanical condition.
      c. Inspect anchorage, alignment, grounding, and required clearances.
      d. Verify the unit is clean.
      e. Lubrication requirements:
         1) Verify appropriate lubrication on moving current-carrying parts.
         2) Verify appropriate lubrication on moving and sliding surfaces.
      f. Verify that manual transfer warnings are attached and visible.
      g. Verify tightness of all control connections.
      h. Inspect bolted electrical connections for high resistance using one of the following methods:
         1) Use of low-resistance ohmmeter.
         2) Verify tightness of accessible bolted electrical connections by calibrated torque wrench:
            (a) Refer to manufacturer's instructions for proper foot-pound levels or NETA ATS tables.
      i. Perform manual transfer operation.
      j. Verify positive mechanical interlocking between normal and alternate sources.
   2. Electrical tests:
      a. Perform resistance measurements through bolted connections with a low- resistance ohmmeter.
      b. Perform insulation-resistance tests on all control wiring with respect to ground. Applied potential shall be 500 VDC for 300-volt rated cable and 1,000 VDC for 600-volt rated cable. Apply the test voltage for 1 minute:
         1) For units with solid-state components or for control devices that cannot tolerate the applied voltage, follow manufacturer's recommendation.
      c. Perform a contact/pole-resistance test.
      d. Verify settings and operation of control devices.
      e. Calibrate and set all relays and timers as specified in this Section.
      f. Verify phase rotation, phasing, and synchronized operation as required by the application.
      g. Perform automatic transfer tests:
         1) Simulate loss of normal power.
         2) Return to normal power.
         3) Simulate loss of emergency power.
         4) Simulate all forms of single-phase conditions.
      h. Verify correct operation and timing of the following functions:
         1) Normal source voltage-sensing relays.
         2) Engine start sequence.
         3) Time delay upon transfer.
         4) Alternate source voltage-sensing relays.

5) Automatic transfer operation.
6) Interlocks and limit switch function.
7) Time delay and retransfer upon normal power restoration.
8) Engine cool down and shutdown feature.

3. Test values:
   a. Compare bolted connection resistance values to values of similar connections:
      1) Investigate values which deviate from those of similar bolted connections by more than 50 percent of the lowest value.
   b. Bolt-torque levels shall be in accordance with manufacturer's published data:
      1) Refer to NETA ATS tables in the absence of manufacturer's published data.
   c. Insulation-resistance values of control wiring shall not be less than 2 meghoms.
   d. Microhm or dc millivolt drop values shall not exceed the high levels of the normal range as indicated in the manufacturer's published data:
      1) If manufacturer's published data is not available, investigate values that deviate from adjacent poles or similar switches by more than 50 percent of the lowest value.
   e. Control devices shall operate in accordance with manufacturer's published data.
   f. Relay test results shall be as specified in this Section.
   g. Phase rotation, phasing, and synchronization shall be as specified in the system design specifications.
   h. Automatic transfers shall operate in accordance with manufacturer's design.
   i. Operation and timing shall be in accordance with manufacturer's and system design requirements.

3.08 ADJUSTING (NOT USED)

3.09 CLEANING

A. As specified in Section 26 05 00.

B. After the acceptance tests have been completed, dispose of all testing expendables, vacuum all cabinets, and sweep clean all surrounding areas.

3.10 PROTECTION

A. As specified in Section 26 05 00.

3.11 SCHEDULES (NOT USED)

END OF SECTION

SECTION 262214
DRY-TYPE TRANSFORMERS

PART 1GENERAL

1.01 SUMMARY

A. Section includes:

1. Enclosed dry-type transformers:
   a. Rated 1 to 1,000 kilovolt-amperes, single and 3-phase.
   b. Primary voltage 600 volts and below.

B. Related sections:
1. Section 01 33 00 - Submittals.
2. Section 26 05 00 – Common Work Results for Electrical.

1.02 REFERENCES

A. As specified in Section 26 05 00.

B. American National Standards Institute (ANSI):
1. C57.96 – Distribution and Power Transformers, Guide for Loading Dry-Type.
2. 389 - IEEE Recommended Practice for Testing Electronics Transformers and Inductors.

C. Institute of Electrical and Electronics Engineers (IEEE):
1. C57.12.01 - Standard General Requirements for Dry-Type Distribution and Power Transformers Including Those with Solid Cast and/or Resin Encapsulated Windings.

D. National Electrical Manufacturers Association (NEMA):
1. TP-1 - Guide for Determining Energy Efficiency for Distribution Transformers.
2. TP-2 - Standard Test Method for Measuring the Energy Consumption of Distribution Transformers.

E. Underwriters Laboratory (UL):
1. 1561 - Standard for Dry-Type General Purpose and Power Transformers.

F. U.S. Department of Energy (DOE):
1. 10 CFR Part 431 - Energy Efficiency Program for Certain Commercial and Industrial Equipment.

1.03 DEFINITIONS

A. As specified in Section 26 05 00.

1.04 SYSTEM DESCRIPTIONS

A. Provide 3-phase or 1-phase, 60 hertz dry-type with voltage ratings, kilovolt-ampere capacities, and connections as indicated on the Drawings:
1. Transformers shall provide full capacity at the Project elevation and environmental conditions as specified in Section 26 05 00 after all derating factors have been applied.
2. Suitable for continuous operation at full rating with normal life expectancy in accordance with ANSI C57.96.

1.05 SUBMITTALS

A. Furnish submittals as specified in Sections 01 33 00 and 26 05 00.

B. Product data:
1. Catalog cut sheets.
2. Nameplate data.
3. Dimensions:
4. Height.
5. Width.
6. Depth.
7. Inrush current.

8. Insulation system and temperature constraints.
9. Number and rating of taps.
10. Sound levels.
11. Connection diagrams:
12. Primary.
13. Secondary.
14. BIL rating.
15. Required clearances.
16. Percent impedance.
17. Efficiency.
18. Certification of full capacity capability at the Project elevation and ambient conditions.
19. For equipment installed in structures designated as seismic design category C, D, E, or F submit the following as specified in Section 26 05 00:
20. Manufacturer's statement of seismic qualification with substantiating test data.
21. Manufacturer's special seismic certification with substantiating test data.

C. Installation instructions:
1. Detail the complete installation of the equipment including rigging, moving, and setting into place.
2. For equipment installed in structures designated as seismic design category D:
a. Provide project-specific installation instructions and anchoring details based on support conditions and requirements to resist seismic and wind loads as specified in Section 26 05 00. Submit anchoring drawings with supporting calculations.
b. Drawings and calculations shall be stamped by a professional engineer registered in the state where the Project is being constructed.

1.06 QUALITY ASSURANCE

A. As specified in Section 26 05 00.

1.07 DELIVERY, STORAGE, AND HANDLING

A. As specified in Section 26 05 00.

1.08 PROJECT OR SITE CONDITIONS

A. As specified in Section 26 05 00.

1.09 SEQUENCING (NOT USED)

1.10 SCHEDULING (NOT USED)

1.11 WARRANTY

A. As specified in Section 26 05 00.

1.12 SYSTEM START-UP

A. As specified in Section 26 05 00.

1.13 OWNER'S INSTRUCTIONS (NOT USED)

1.14 MAINTENANCE (NOT USED)

PART 2PRODUCTS

2.01 MANUFACTURERS

A. One of the following or equal:
1. Schneider Electric/Square D.

2.02 EXISTING PRODUCTS (NOT USED)

2.03 MATERIALS

A. Cores:

1. Non-aging, grain-oriented silicon steel.
2. Magnetic flux densities below the saturation point.

B. Windings:
1. High-grade magnet wire.
2. Impregnated assembly with non-hydroscopic, thermo-setting varnish:
   a. Cured to reduce hot-spots and seal out moisture.
3. Material electrical grade:
   a. Copper.

2.04 MANUFACTURED UNITS (NOT USED)

2.05 EQUIPMENT

A. General:
1. 10 kilovolts BIL for 600-volt class windings.
2. Sound levels, in accordance with ANSI 389 test conditions, not to exceed:

Kilovolt-Amperes Range	Audible Sound Level (db)
1-9	40
10-50	45
51-150	50
151-300	55
301-500	60
501-700	62
701-1000	64

3. Taps:
   a. 15 kilovolt-amperes and less:
      1) Two 5 percent full capacity primary taps below rated voltage.
   b. 25 kilovolt-amperes and larger:
      1) Four 2.5 percent full capacity primary taps below rated voltage.
      2) Two 2.5 percent full capacity primary taps above rated voltage.
   c. Operated by a tap changer handle or tap jumpers accessible through a panel.
4. Terminals:
   a. UL listed for either copper or aluminum conductors.
   b. Rated for 75 degrees Celsius.
5. Daily overload capacities, at rated voltage and without reduction in life, in accordance with ANSI C57.96.

B. Energy efficient transformers 15 kilovolt-amperes and larger:
1. Insulation class: 220 degrees Celsius.
2. Temperature rise: 115 degrees Celsius, except as noted below:
   a. 150-degree Celsius rise for dry-type transformers located in motor control centers.
3. Efficiency:
   a. In accordance with DOE 10 CFR Part 431.

C. Enclosures:
1. Heavy gauge steel:
   a. Indoor: NEMA Type 2.
   b. Outdoor: NEMA Type 3R.
2. Louvers to limit coil temperature rise to the value stated above, and case temperature rise to 50 degrees Celsius.
3. Built-in vibration dampeners to isolate the core and coils from the enclosure:
   a. Neoprene vibration pads and sleeves.

2.06 COMPONENTS (NOT USED)

2.07 ACCESSORIES

A. Nameplates:
   1. Non-corrosive metal or UL listed non-metallic:
      a. Stamped, engraved or printed with the following information:
         1) Phases.
         2) Frequency.
         3) Kilovolt-ampere rating.
         4) Voltage ratings.
         5) Temperature rise.
         6) Impedance.
         7) Insulation class.
         8) BIL rating.
         9) Connection diagram.
         10) Weight.
         11) Manufacturer.
         12) The identification “transformer”.
         13) Classes of cooling.
         14) Tap voltage(s).
         15) Vector diagram.

2.08 MIXES (NOT USED)

2.09 FABRICATION (NOT USED)

2.10 FINISHES

A. Finish to consist of de-greasing, phosphate cleaning, and an electrodeposited manufacturer’s standard gray enamel rust-inhibiting paint.

2.11 SOURCE QUALITY CONTROL (NOT USED)

PART 3EXECUTION

3.01 EXAMINATION (NOT USED)

3.02 PREPARATION (NOT USED)

3.03 INSTALLATION

A. As specified in Section 26 05 00.

B. Install the equipment in accordance with the accepted installation instructions and anchorage details to meet the seismic and wind load requirements at the Project site.

C. General:
   1. Install where not in direct contact with building structure.
   2. Install on single layer vibration pad under the entire mounting surface.
      a. Manufacturers: The following or equal:
         1) Korfund.
   3. Make any necessary connections to the enclosure with liquidtight flexible conduit having neoprene gaskets and insulated ground bushings.
   4. Ground the enclosure:
      a. To an equipment ground conductor in the conduit.
      b. To the facility grounding electrode system.
   5. Floor mounted transformers:
      a. Install transformers on 3-1/2-inch housekeeping pads.
      b. Install transformers with adequate space from walls or other enclosures for proper ventilation in accordance with the manufacturer’s recommendations.

3.04 ERECTION, INSTALLATION, APPLICATIONS, CONSTRUCTION (NOT USED)

3.05 REPAIR/RESTORATION (NOT USED)

3.06 RE-INSTALLATION (NOT USED)

3.07 COMMISSIONING

A. Perform acceptance testing per Section 26 08 50.

B. Factory tests:
   1. Applied voltage test to each winding and from each winding to the core:
      a. 600-volt class winding 4.5 kilovolt.
   2. Induced voltage test at 2 times normal voltage and 400 hertz for 1,080 cycles.
   3. Voltage ratio and polarity.
   4. Sound level, performed in a test room with ambient sound level not exceeding 24 db.
   5. Perform all tests in accordance with UL 1561.

3.08 FIELD QUALITY CONTROL

A. As specified in Section 26 05 00.

3.09 ADJUSTING

A. Set the transformer taps as required to obtain nominal output voltage on the secondary terminals.

3.10 CLEANING

A. As specified in Section 26 05 00.

3.11 PROTECTION

A. As specified in Section 26 05 00.

3.12 SCHEDULES (NOT USED)

END OF SECTION

SECTION 262413
SWITCHBOARDS

PART 1 - GENERAL

1.01 SUMMARY

A. Section includes:
   1. Switchboards
   2. Switchboard accessories.

B. Related sections:

   1. Section 01 33 00 - Submittals.
   2. Section 26 05 00 - Common Work Results for Electrical.
   3. Section 26 05 53 - Identification for Electrical Systems.
   4. Section 26 08 50 - Field Electrical Acceptance Tests.
   5. Section 26 28 01 - Low Voltage Molded Case Circuit Breakers.
   6. Section 26 36 24 - Automatic Transfer Switches.
   7. Section 26 43 14 - Surge Protective Devices.

1.02 REFERENCES

A. As specified in Section 26 05 00.

B. Institute of Electrical and Electronic Engineers (IEEE).
   1. C57.13 - IEEE Standard Requirements for Instrument Transformers.

C. National Electrical Manufacturers' Association (NEMA):
   1. PB 2 - Deadfront Distribution Switchboards.

D. Underwriters' Laboratories, Inc. (UL):
   1. 891 - Switchboards.

1.03 DEFINITIONS

A. As specified in Section 26 05 00.

1.04 SYSTEM DESCRIPTION

A. Factory assembled, wired, and tested switchboards, with major components being products of a single manufacturer, including circuit breakers, and other equipment specified in this Section and indicated on the Drawings.

1.05 SUBMITTALS

A. Furnish submittals as specified in Sections 01 33 00 and 26 05 00.

B. Product data:
   1. Manufacturer of switchboard.
   2. Manufacturer of all component parts of switchboard.
   3. Dimensions:
   4. Nameplate schedule.
      a. Width.
      b. Length.
      c. Height.
      d. Weight.
   5. Bill of material.
   6. Description of operation.
   7. Ratings:
      a. Voltage.
      b. Phase.
      c. Current.
      d. Interrupting rating (circuit breakers and fuses).
   8. List of recommended spare parts.

9. Name of dealer's repair facility and parts stocking agreement with the factory:
    a. Agreement shall outline in detail the manufacturer's parts stocking requirements and the method by which the manufacturer's representative verifies that the stock is at an acceptable level.
    b. Agreement should also outline the method by which the manufacturer's representative determines that the service personnel meet factory standards.
    c. A toll-free or local phone number with 24/7 emergency monitoring/call back is required.
10. Furnish circuit breaker submittals as specified in:
    a. Section 26 28 01.
    b. Section 26 24 13.
11. For equipment installed in structures designated as seismic design category C, D, E, or F submit the following as specified in Section 26 05 00:
    a. Manufacturer's statement of seismic qualification with substantiating test data.
12. Manufacturer's special seismic certification with substantiating test data.

C. Shop Drawings:
1. Complete, detailed, and scaled switchboard layout:
    a. Front panel.
    b. Sub-panels.
    c. Interior panels.
    d. Top and bottom conduit windows.
2. Complete electrical wiring diagrams:
    a. Point-to-point connections.
    b. Internal compartment-to-compartment interconnection wiring diagrams.
    c. Wiring identification and terminal numbers.
3. Complete 3-line diagrams for each switchboard lineup. These drawings shall indicate devices comprising the switchboard assembly including, but not limited to, circuit breakers, control power and instrument transformers, meters, and control devices. Clearly, indicate electrical ratings of devices on Drawings.
4. Complete interface and connection diagrams for metering system.
5. Complete bill of material list and equipment data sheets identifying appropriate information specific to the switchboard being supplied.
6. Nameplate schedule.
7. Before fabrication, submit Switchboard Shop Drawings for approval to Owner's dry utility consultant (if applicable) and SCE.

D. Installation instructions:
1. Detail the complete installation of the equipment including rigging, moving, and setting into place.
2. For equipment installed in structures designated as seismic design category A or B:
    a. Provide manufacturer's installation instructions and anchoring details for connecting equipment to supports and structures.
3. For equipment installed in structures designated as seismic design category C, D, E, or F:
    a. Provide project-specific installation instructions and anchoring details based on support conditions and requirements to resist seismic and wind loads as specified in Section 26 05 00.
    b. Submit anchoring drawings with supporting calculations.

E. Drawings and calculations shall be stamped by a professional engineer registered in the state where the Project is being constructed.

F. Test forms and reports:
1. Submit complete factory acceptance test procedures and all forms used during the test.
2. Manufacturer to furnish a certified report after the shop tests.
3. Manufacturer's start-up representative to furnish a written report after the start-up:

a. Report must state that the installation is complete and satisfactory, or list items requiring additional attention and a proposal for the actions.
b. If any items require attention after the initial start-up, a final report is required stating that the installation is complete and satisfactory.

G. Installation instructions:
1. The written instructions must detail the complete installation of the switchboard including rigging, moving and setting into place.
2. Provide anchorage instructions and requirements for the switchboard based on the seismic conditions of the site as specified in Section 26 05 00.
a. Stamped by a professional engineer licensed in the state where the Project is being constructed.

1.06 QUALITY ASSURANCE

A. As specified in Section 26 05 00.

B. The switchboard and all components shall be UL listed and labeled.

C. Equipment shall be designed and constructed in accordance with the following standards and requirements:
1. NEMA PB 2.
2. UL 891.

1.07 DELIVERY, STORAGE, AND HANDLING

A. As specified in Section 26 05 00.

B. Ship switchboards to the site in dedicated air ride vans that will allow the Contractor to utilize on site off loading equipment.

C. Furnish temporary equipment heaters within the switchboard to prevent condensation from forming.

1.08 PROJECT/SITE CONDITIONS

A. As specified in Section 26 05 00.

1.09 SEQUENCING

A. Conduct the initial fault current study and submit results for Engineer's review.

B. After successful review of the initial fault current study, submit complete equipment submittal.

C. Conduct factory acceptance test and submit certified test results for Engineer's review.

D. Ship equipment to the Project Site after successful completion of factory acceptance test.

E. Assemble equipment in the field.

F. Conduct field acceptance test and submit results for Engineer's review.

G. Submit manufacturer's certification that the equipment has been properly installed and is fully functional for Engineer's review.

H. Conduct Owner's training sessions.

1.10 SCHEDULING (NOT USED)

1.11 WARRANTY

A. As specified in Section 26 05 00.

1.12 SYSTEM START-UP

A. As specified in Section 26 05 00.

1.13 OWNER'S INSTRUCTIONS (NOT USED)

1.14 MAINTENANCE (NOT USED)

PART 2 - PRODUCTS

2.01 MANUFACTURERS

A. Switchboards:
   1. The main switchboard shall be Square-D QED-2.

2.02 EXISTING PRODUCTS (NOT USED)

2.03 MATERIALS (NOT USED)

2.04 MANUFACTURED UNITS (NOT USED)

2.05 EQUIPMENT

A. Switchboard
   1. Complete assembly, including steel framing and covers, bus system, and breaker mounting, shall satisfy applicable provisions of UL 891 and NEMA PB-2 and the California Electrical Code for low-voltage distribution switchboards. Switchboards shall be furnished with UL labels.
   2. Short Circuit Current Rating: Switchboards shall be rated with a minimum short circuit current rating of 65,000 rms symmetrical amperes at 208 VAC maximum.
   3. Switchboards shall be floor standing, dead front, dead rear, line bussed, front operated and connected, circuit-breaker type, unless otherwise indicated and shall contain equipment indicated and specified. Switchboard shall be complete with pull, service, and distribution sections as required.
   4. Required equipment shall be enclosed in fully interchangeable die formed steel sectional cabinets will be absolutely rigid welded construction, plumb and uniform in size. Each cabinet shall be a separate and independent unit with assembly holes die-stamped or jig drilled; openings for interconnections shall be so placed that cabinet can be located in any position in assembly without drilling or cutting holes on job. Deliver switchboard to Project site in completely assembled sections and provide required assembly bolts and blanking plates. Front plates and doors shall be of not less than 12 gage furniture steel, completely removable, secured to cabinet with machine screws, with cup washers uniformly and symmetrically spaced. Provide hinged wire gutter covers for distribution sections. Equipment shall meet NEMA and UL standards.
   5. Circuit breakers shall be as follows (protective device shall be as shown on drawings):
      a. See Section 26 28 01
      b. Main circuit breakers shall be automatic, one-piece molded-case, trip-free, common trip, quick-make, quick-break, thermal-magnetic with solid state trips, bolted to bus with frame size and trip ratings as indicated on drawings. Voltage, amperage ratings and number of poles shall be as indicated on breakers. Main breaker shall provide a minimum short-circuit interrupting capacity as determined by utility company. Provide shunt-trip and integral ground fault devices, as indicated on drawings. Breakers shall be furnished with lockout provisions.
      c. Feeder circuit breakers shall be automatic, one-piece molded-case, trip-free, common trip, quick-make, quick-break, thermal-magnetic or solid state type bolted to bus, with handles clearly indicating tripped position.
      d. Breakers shall be furnished with a single handle with no tie-bar. Voltage, amperage, and number of poles shall be as indicated on Drawings. Breaker ratings shall be on handle or label. Breakers shall be furnished with lockout provisions approved by the State of California for padlocking and shall provide a minimum symmetrical short-circuit interrupting rating, as indicated on Drawings. Series rated circuit breaker combinations are not acceptable.
   6. Utility metering provisions shall meet requirements of serving utility and shall be furnished with necessary fittings.

7. Provide switchboard silver-plated copper bus bars of same capacity as main breaker, or as indicated on Drawings, between current transformer and main section and distribution sections; also, full height of breaker space in distribution portions. Copper bus shall have current density of 1000A per square inch of cross section. Bus structure shall be free-fitted, and shall have sufficient strength to withstand short-circuit as indicated on drawings. Connections shall be securely bolted together with corrosion-resistant plated carbon steel, minimum grade five machine screws secured with constant pressure-type locking devices. Bus bar bracing shall be designed to withstand maximum available short-circuit current. Connections for cables to circuit breakers, switches and motor control devices shall be heavy-duty mechanical pressure type terminal lugs. Provide service cable lugs as required by utility company. Cables and internal wiring shall be supported with suitable cleats.
8. Switchboard distribution sections shall be furnished with full height bussing. Unused spaces shall be provided with blank covers. Switchboards, as complete units, shall be given single short-circuit current ratings by manufacturer. Such ratings shall be established by actual tests by manufacturer, in accordance with UL specifications, on equipment constructed similarly to the furnished switchboard.
9. Provide a large nameplate identifying switchboard, indicating service voltage, originating power source, function and current rating. Nameplate shall be furnished with 3/16 inch engraved black letters on white background. Name plate shall be mechanically fastened to switchboard.
10. Provide labels for circuit breakers, disconnect switches, and or other disconnecting means in switchboards. Label shall indicate name of load served, name or room number and if in different building, name of building. If equipment is installed in same room as source, label should indicate source name and “in this room”.
    a. Labels shall be as specified in Section 26 05 53.
11. Paint cabinets, framework and plates inside and out with one coat of rust-resistant metal primer and one coat of enamel, baked on, or lacquer sprayed on. Color shall be per Owner's preference.
12. Manufacture boards according to reviewed Shop Drawings. Switchboard shall meet requirements of legally constituted authorities having jurisdiction, and respective serving utility.
13. Switchboards installed indoors shall be NEMA Type 1 enclosure. Indoor enclosures shall provide front access. Switchboard sections shall all be front and rear alligned with the adjacent sections.
14. Switchboards installed outdoors shall be weatherproof NEMA Type 3R enclosure. Enclosure construction shall be formed of code gage galvanized steel with enamel finish. Heavy-duty, three-point latching, vault type door handles with padlocking provisions shall be furnished on doors. Padlocks shall be furnished keyed to Corbin No. 60 keys. Switchboards installed outdoors shall be specifically required to maintain service during extreme outdoor ambient temperatures of a minimum of 150 degrees Fahrenheit in NEMA Type 3R enclosures.
15. For grounded wye electrical service switchboards rated more than 150 volts, to ground and 1,000 amperes or more, provide ground fault protection for main protective device. Ground fault protection shall be UL listed, with ground sensor encircling phase conductors and neutral conductors integral with the main protective device. Provide testing of ground fault protection system by an independent recognized testing laboratory. Testing lab shall provide necessary testing equipment at the Project site and perform a certified test on ground protection system in presence of the Project Inspector. The ground fault setting shall be selected to coordinate with downstream circuit protective devices. Verify that the system neutral is grounded at the service entrance switchboard only, except neutrals of step down distribution transformers. For branch circuit protective devices, rated 800 amps or more, provide ground fault protection where shown on the drawings, or as described above, for main protective device. Coordinate settings with main protective device ground fault protection.

16. Connections to bussing shall be securely bolted together with corrosion-resistant plated carbon steel, minimum grade five machine screws secured with constant pressure-type locking devices.
17. Arc Flash Reduction Maintenance Switch: The Arcflash Reduction Maintenance System shall allow the operator to enable a maintenance mode using a 5 position switch which enables a preset accelerated instantaneous override trip to reduce arc flash energy. A blue LED on the trip unit shall indicate the trip unit is in the maintenance mode.
18. The automatic transfer switch shall be installed in a section within the switchboard. See Section 26 36 24 for transfer switch details.

B. Accessories:
1. Power monitor:
   a. As specified on Drawings.
2. Surge protective devices:
   a. As specified in Section 26 43 14.
3. Lights and receptacles
   a. Switchboard shall have LED light fixtures in the main section. Provide tumbler switch in each section for operation of lights.
   b. Switchboard shall have a GFCI receptacle in main section.
   c. Lights and receptacle shall be powered via internal control power transformer.

2.06 MIXES (NOT USED)

2.07 FABRICATION (NOT USED)

2.08 FINISHES

A. Chemically clean all steel surfaces before painting.

B. Color shall be per Owner's preference.

2.09 SOURCE QUALITY CONTROL (NOT USED)

PART 3 - EXECUTION

3.01 EXAMINATION (NOT USED)

3.02 PREPARATION (NOT USED)

3.03 INSTALLATION

A. As specified in Section 26 05 00.

B. Install the equipment in accordance with the accepted installation instructions and anchorage details to meet the seismic and wind load requirements at the Project site.

C. General:
1. Furnish cables, conduit, lugs, bolts, expansion anchors, sealants, and other accessories needed to complete the installation of the switchboard.
2. Physically assemble and install the switchboard in the location and layout indicated on the Drawings.
3. Make bus splice connections.
4. Perform work in accordance with manufacturer’s instructions and shop drawings.
5. Furnish components and equipment as required to complete the installation.
6. Replace hardware lost or damaged during the installation or handling to provide a complete installation.
7. Weld and/or bolt switchboard frame to leveling channels embedded in the concrete housekeeping pad or foundation:
   a. Provide structural leveling channels in accordance with manufacturer's recommendations to provide proper alignment of the units.
   b. The installation shall meet the seismic requirements of the site.

D. Provide the services of a qualified manufacturer’s representative to:

1. Inspect, verify, and certify that the mechanical installation meets the manufacturer's requirements.
2. Make control connections across the shipping splits.
3. Install and align all circuit breakers.
4. Perform field tests.

3.04 ERECTION, INSTALLATION, APPLICATION, CONSTRUCTION (NOT USED)

3.05 REPAIR/RESTORATION (NOT USED)

3.06 RE-INSTALLATION (NOT USED)

3.07 COMMISSIONING

A. Factory tests:
   1. The Owner and Engineer will witness the factory acceptance test as specified in Section 26 05 00.
   2. Test the complete switchgear at the manufacturer's establishment.
      a. Completely assemble, wire and test the switchboard:
         1) Detailed inspections before and after assembly to assure correctness of design and workmanship.
         2) Provide groups of wires leaving the shipping-assembled equipment with terminal blocks with suitable numbering strips.

B. Inspect and test per NETA ATS standards.

C. Owner training:
   1. As specified in Section 26 05 00.

3.08 FIELD QUALITY CONTROL

A. As specified in Section 26 05 00.

B. Provide manufacturer's services for the following:
   1. Make all bus splice connections.
   2. Make all control connections across shipping splits.
   3. Ensure that all items furnished are in proper operating condition:
      a. Technician must be completely knowledgeable in the operation, maintenance, and start-up of the electrical system.
   4. Furnish a written report after start-up signed by the manufacturer's authorized representative:
      a. Report must state that the installation is complete and meets all of the manufacturer's requirements.
      b. List any items requiring additional attention.

3.09 ADJUSTING

A. Make all adjustments as necessary and recommended by the manufacturer, Engineer, or testing firm.

3.10 CLEANING

A. As specified in Section 26 05 00.

3.11 PROTECTION

A. As specified in Section 26 05 00.

3.12 SCHEDULES (NOT USED)

END OF SECTION

SECTION 262416
PANELBOARDS

PART 1GENERAL

1.01 SUMMARY

A. Section includes:

1. Panelboards serving feeder circuits and branch circuits.

B. Related sections:
1. Section 01 33 00 - Submittals.
2. Section 26 05 00 - Common Work Results for Electrical.
3. Section 26 05 53 - Identification for Electrical Systems.
4. Section 26 28 01 - Low Voltage Molded Case Circuit Breakers.

1.02 REFERENCES

A. As specified in Section 26 05 00.

B. Underwriter's Laboratories, Inc. (UL):
1. 67 - Standard for Panelboards.

1.03 DEFINITIONS

A. As specified in Section 26 05 00.

1.04 SYSTEM DESCRIPTION

A. Circuit breaker panelboards as indicated in the panelboard schedules, one-lines, and where indicated on the Drawings:
1. Service voltage and configuration as indicated on the panel schedules.

1.05 SUBMITTALS

A. Furnish submittals as specified in Sections 01 33 00 and 26 05 00.

B. Product data:
1. Manufacturer of panelboard.
2. Bill of material.
3. Assembly ratings including:
   a. Voltage.
   b. Phase.
   c. Continuous current.
   d. Short circuit interrupting rating.
4. NEMA enclosure type.
5. Cable terminal sizes based upon actual feeder and sub-feeder conductors used.
6. Furnish circuit breaker submittals as specified in Section 26 28 01.
7. For equipment installed in structures designated as seismic design category C, D, E, or F submit the following as specified in Section 26 05 00:
   a. Manufacturer’s statement of seismic qualification with substantiating test data.
   b. Manufacturer’s special seismic certification with substantiating test data.

C. Shop drawings:
1. Drawings to contain:
   a. Overall panelboard dimensions, interior panel dimensions, and wiring gutter dimensions:
      1) Height.
      2) Length.
      3) Width.
   b. Weight.
   c. Anchoring locations.
   d. Breaker layout drawing with dimensions:

1) Location of the main, branches, solid neutral, and ground.

e. Conduit entry/exit locations.

1) Identify all conduit entry/exit locations and restrictions.

f. Individual panel schedules identifying breaker locations, ratings, and nameplate designations within the panelboard, for every panelboard.

D. Installation instructions:

1. Detail the complete installation of the equipment including rigging, moving, and setting into place.
2. For equipment installed in structures designated as seismic design category A or B:
   a. Provide manufacturer's installation instructions and anchoring details for connecting equipment to supports and structures.
3. For equipment installed in structures designated as seismic design category C, D, E, or F:
   a. Provide project-specific installation instructions and anchoring details based on support conditions and requirements to resist seismic and wind loads as specified in Section 26 05 00.
   b. Submit anchoring drawings with supporting calculations.
   c. Drawings and calculations shall be stamped by a professional engineer registered in the state where the Project is being constructed.

E. Operations and maintenance manual:

1. Provide a complete manual for the operation and maintenance of the panelboard, circuit breakers, devices, and accessories:
   a. Including but not limited to:
      1) Instruction narratives and bulletins.
      2) Renewal parts lists.
      3) Time-current curves for all devices.

F. Calculations:

1. Detailed calculations or details of the actual physical testing performed on the panelboard to prove the panelboard is suitable for the seismic requirements at the Project Site.

1.06 QUALITY ASSURANCE

A. As specified in Section 26 05 00.

B. Panelboards shall be UL listed and labeled.

1. Where indicated as service entrance equipment, panelboards shall be UL labeled and listed "Suitable for Service Entrance."

1.07 DELIVERY, STORAGE, AND HANDLING

A. As specified in Section 26 05 00.

1.08 PROJECT OR SITE CONDITIONS

A. As specified in Section 26 05 00.

1.09 SEQUENCING (NOT USED)

1.10 SCHEDULING (NOT USED)

1.11 WARRANTY

A. As specified in Section 26 05 00.

1.12 SYSTEM START-UP

A. As specified in Section 26 05 00.

1.13 OWNER'S INSTRUCTIONS (NOT USED)

1.14 MAINTENANCE (NOT USED)

PART 2PRODUCTS

2.01 MANUFACTURERS

A. One of the following or equal:
   1. Schneider Electric/Square D Company.

B. Circuit breakers:
   1. Same manufacturer as the panelboard.

2.02 EXISTING PRODUCTS (NOT USED)

2.03 MATERIALS (NOT USED)

2.04 MANUFACTURED UNITS (NOT USED)

2.05 EQUIPMENT

A. Provide panelboards with:
   1. Molded-case circuit breakers with trip ratings as shown on the panel schedules.
   2. Spares and spaces for future circuit breakers in panels as shown on the panel schedules.

B. Short circuit rating:
   1. Provide panelboards with short-circuit ratings as indicated on the Drawings:
   2. Testing method in accordance with UL 67.
   3. Mark each panelboard with its maximum short circuit rating at the supply voltage.
   4. Panelboards shall be fully rated.

2.06 COMPONENTS

A. Enclosure:
   1. NEMA enclosure type as indicated on the Drawings.
      a. Where not indicated on the Drawings, as specified in Section 26 05 00 for the installed location.
   2. Minimum width: 20 inches.
   3. Gutter space in accordance with the NEC:
      a. Minimum of 4 inches of gutter space.
   4. Dead-front, no live parts when the panelboard is in service.
   5. Enclose entire panelboard bus assembly in a corrosion resistant galvanized steel cabinet.
   6. 4-piece front to provide ease of wiring access.
   7. Lockable, hinged door over the protective devices with a flush, cylinder tumbler-type lock with catch and door pull.
      a. Minimum 2 keys per panelboard.
      b. Key all panelboard locks alike.
   8. Circuit directory frame and card on the inside of the door.
   9. Door-in-door construction consists of a one-piece front with 2 doors:
      a. The smaller door provides access to all device handles and rating labels and shall be lockable.
      b. The larger door provides access to all conductors and wiring terminals.
   10. Interior design such that replacement of circuit breakers does not require disturbing adjacent units or removal of the main bus connectors.

B. Bus:
   1. General:
      a. Tin-plated copper.
   2. Phase bus:
      a. Full size and height without reduction.

b. Sized in accordance with UL standards to limit temperature rise on any current carrying part to a maximum of 50 degrees Celsius:
1) Limit current density to less than 1,000 amps per square inch.
c. Insulate all current carrying parts from ground and phase-to-phase with a high dielectric strength insulator.
3. Ground bus:
a. Copper, solidly bonded.
4. Neutral bus:
a. Provide where indicated on the Drawings.
b. 100 percent rated.
c. Provide lugs for each outgoing feeder requiring a neutral connection.
5. Provide insulation barriers over the vertical bus behind the dead front shield to provide increased safety during field service.

C. Lugs:
1. UL listed for copper and aluminum wire:
a. Provide lugs rated for 75-degree Celsius terminations.
b. Provide bolted or compression main lug terminations as required for the incoming cable size.

D. Circuit breakers: As specified in Section 26 28 01 and as indicated on the Drawings:
1. Provide all circuit breakers with bolt-on connections:
a. Plug-in circuit breakers are not allowed.

2.07 ACCESSORIES

A. Nameplates:
1. As specified in Section 26 05 53.
2. Install on outside of door.
3. Indicating:
a. Panel designation.
b. Voltage.
c. Number of phases and configuration.

B. Circuit identification labels:
1. Provide index cards behind heavy clear plastic in cardholders on the inside of the doors.
2. Type all information on the cards using designations in the panel schedules.
3. Laminated on both sides.

C. Pad locking mechanism:
1. Provide a pad locking attachment to allow circuit breakers to be locked in the off position.
2. At a minimum, provide 1 mechanism per panelboard:
a. Provide multiple mechanisms if required to accommodate all circuit breaker frame sizes in the panelboard.

2.08 MIXES (NOT USED)

2.09 FABRICATION (NOT USED)

2.10 FINISHES

A. Finish stand-alone panelboards with a primer, rust-resistant phosphate undercoat, and 2 coats of oven-baked enamel with manufacturer's standard gray.

B. Finish panelboards mounted in motor control centers to match the motor control center finish and color.

2.11 SOURCE QUALITY CONTROL (NOT USED)

PART 3EXECUTION

1.01 EXAMINATION (NOT USED)

1.02 PREPARATION (NOT USED)

1.03 INSTALLATION

A. As specified in Section 26 05 00.

B. Install the equipment in accordance with the accepted installation instructions and anchorage details to meet the seismic and wind load requirements at the Project site.

C. General:
   1. Surface, flush or MCC mounted as indicated on the Drawings.
   2. Mount rigidly to structural members with exposed surfaces plumb and level to within 1/32 inch.
   3. Perform work in accordance with the manufacturer's instructions and shop drawings.
   4. Provide all brackets, hangers, supports, and hardware for mounting as required.
   5. In all NEMA Type 4 and NEMA Type 4X locations, mount panelboards on 7/8-inch deep stainless steel preformed channel, with channel running vertically from top to bottom of panelboard:
      a. Use only stainless steel mounting hardware.
   6. Mount panelboard so that top operating handle is not more than 6 feet- 7 inches above the operating floor.

1.04 ERECTION, INSTALLATION, APPLICATION, CONSTRUCTION (NOT USED)

1.05 REPAIR/RESTORATION (NOT USED)

1.06 RE-INSTALLATION (NOT USED)

1.07 COMMISSIONING

A. Perform acceptance testing per Section 26 08 50.

B. Factory testing:
   1. Perform standard factory tests on the panelboards:
   2. Test in accordance with the latest version of NEMA and UL standards.

1.08 FIELD QUALITY CONTROL

A. As specified in Section 26 05 00.

1.09 ADJUSTING (NOT USED)

3.10 CLEANING

A. As specified in Section 26 05 00.

3.11 PROTECTION

A. As specified in Section 26 05 00.

3.12 SCHEDULES

A. Circuiting within the panelboard shall match the panel schedules as indicated on the Drawings.

B. Provide typewritten schedule in each panelboard.

END OF SECTION

SECTION 262726
WIRING DEVICES

PART 1 - GENERAL

1.01 SUMMARY

A. Section includes:
   1. Switches.
   2. Receptacles.
   3. Plates.

B. Related sections:
   1. Section 01 33 00 - Submittal Procedures.
   2. Section 26 05 00 - Common Work Results for Electrical.

1.02 REFERENCES

A. As specified in Section 26 05 00.

B. Federal Specifications (FS):
   1. W-C 596 - Connector, Electrical, Power, General Specification for.
   2. W-S 896/2 - Switches, Toggle (Toggle and Lock), Flush Mounted (General Specification).

C. National Electrical Manufacturers Association (NEMA):
   1. WD1 - General Color Requirements for Wiring Devices.
   2. ICS 5 - Industrial Control and Systems, Control Circuit and Pilot Devices.
   3. OS1 - Sheet-Steel Outlet Boxes, Device Boxes, Covers, and Box Supports.
   4. WD6 - Wiring Devices Dimensional Specifications.

D. Underwriters Laboratories Inc. (UL):
   1. 20 - General Use Snap Switches.
   2. 498 - Standard for Attachment Plugs and Receptacles.
   3. 514D - Cover Plates for Flush-Mounted Wiring Devices.
   4. 943 - Ground-Fault Circuit-Interrupters.
   5. 1472 - Solid State Dimming Controls.

1.03 DEFINITIONS

A. As specified in Section 26 05 00.

B. Specific definitions:
   1. GFCI or GFI: Ground fault circuit interrupter.

1.04 SYSTEM DESCRIPTION

A. Switches, receptacles, and plates as indicated on the Drawings wired and operable to form a complete system.

1.05 SUBMITTALS

A. Furnish submittals as specified in Sections 01 33 00 and 26 05 00.

B. Product data:
   1. Catalog cut sheets.

C. Shop drawings:
   1. Engraving schedule:
      a. Furnish complete engraving schedule for engraved nameplates.

1.06 QUALITY ASSURANCE

A. As specified in Section 26 05 00.

B. Wiring devices shall be UL listed and labeled.

1.07 DELIVERY, STORAGE, AND HANDLING

A. As specified in Section 26 05 00.

1.08 PROJECT OR SITE CONDITIONS

A. As specified in Section 26 05 00.

1.09 SEQUENCING (NOT USED)

1.10 SCHEDULING (NOT USED)

1.11 WARRANTY

A. As specified in Section 26 05 00.

1.12 SYSTEM START-UP

A. As specified in Section 26 05 00.

1.13 OWNER'S INSTRUCTIONS (NOT USED)

1.14 MAINTENANCE (NOT USED)

PART 2 - PRODUCTS

2.01 MANUFACTURERS

A. Switches:
   1. One of the following or equal:
      a. Hubbell.
      b. Leviton.

B. Cooper Wiring Devices.Receptacles:
   1. General purpose receptacles: One of the following or equal:
      a. Hubbell.
      b. Leviton.
      c. Cooper Wiring Devices.

C. Plates:
   1. General location: The following or equal:
      a. Pass and Seymour.
      b. Cooper Wiring Devices.
   2. Wet or corrosive areas: One of the following or equal:
      a. Hubbell.
      b. Cooper Wiring Devices.
      c. Thomas and Betts.
      d. Pass and Seymour.
   3. In-use covers: One of the following or equal:
      a. TayMac.
      b. Cooper Wiring Devices.
      c. Pass and Seymour.
      d. Thomas and Betts.

2.02 EXISTING PRODUCTS (NOT USED)

2.03 MATERIALS (NOT USED)

2.04 MANUFACTURED UNITS

A. Switches:
   1. General:
      a. 120-277 VAC.
      b. 20 ampere, or as indicated on the drawings.
      c. Listed in accordance with UL 20.
      d. Designed and constructed in accordance with FS W-S-896/2.
      e. Back and side wired unless otherwise indicated.

f. Integral grounding terminal.
g. Totally enclosed:
1) Color-coded body with color corresponding to ampere rating.
h. Provide switches with the operator style and contact arrangement as indicated on the Drawings and as required for proper operation.
i. Color:
1) Ivory in finished areas.
2) Brown in all other areas.

2. General purpose switches:
a. Toggle or rocker type.

3. Switches for use with photocell:
a. Maintained contact.
b. Two circuit.
c. Three position, center off.

B. Receptacles:
1. General purpose receptacles:
a. Single or duplex as indicated on the Drawings.
b. 125 VAC.
c. 20 ampere or as indicated on the Drawings.
d. NEMA Type 5-20R configuration for 20 ampere receptacles.
e. Other NEMA configurations as indicated on the Drawings.
f. Listed in accordance with UL 498.
g. Designed and constructed in accordance with FS W-C-596.
h. Back and side wired.
i. One-piece, rivet-less mounting strap.
j. Color:
1) Ivory in finished areas.
2) Brown in all other areas.
3) Orange when powered by an UPS.

2. Ground fault interrupter receptacles (GFCI):
a. 125 VAC.
b. 20 ampere.
c. Trip level 4-6 milliampere.
d. Individual and feed through protection.
e. UL 943 and UL 498 listed.
f. NEMA Type 5-20R configuration.
g. For damp or wet locations:
1) Weather resistant, in accordance with UL 498.

C. Plates:
1. General location:
a. Type 302 or 304 stainless steel.
b. Brushed satin finish.
c. Minimum thickness: 0.032 inches.
d. Rectangular or square shape.
e. Engraving:
1) Engrave each switch plate with the following:
(a) Area served.
(b) Panelboard and Circuit.
2) Engrave each receptacle plate with the following:
(a) Panelboard and Circuit.
3) Treat engraving to improve visibility.

4) Characters shall be block letter pantograph engraved with a minimum character height of 1/8-inch.

f. Coordinate the number of gangs, number, and type of openings with the specific location.

2. Outdoor and wet areas requiring NEMA Type 4 or NEMA Type 4X enclosures:

a. General:

1) UL listed for wet locations.

2) Gasketed.

3) Die cast metal:

(a) Match material to box material.

b. Switches:

1) Lever operated:

(a) Provide toggle switch.

c. Receptacles:

1) Weather proof in-use cover:

(a) Die cast metal construction with electrostatic powder coating for corrosion resistance.

(b) Gasketed.

(c) Lockable.

(d) UL listed and in accordance with NEC.

2.05 EQUIPMENT (NOT USED)

2.06 COMPONENTS (NOT USED)

2.07 ACCESSORIES (NOT USED)

2.08 MIXES (NOT USED)

2.09 FABRICATION (NOT USED)

2.10 FINISHES (NOT USED)

2.11 SOURCE QUALITY CONTROL (NOT USED)

PART 3 - EXECUTION

3.01 EXAMINATION (NOT USED)

3.02 PREPARATION (NOT USED)

3.03 INSTALLATION

A. As specified in Section 26 05 00.

B. Mounting heights:

1. Switches: 48 inches from finished floor to top of plate.

2. Receptacles: 18 inches from finished floor to center of plate.

C. Switches:

1. Over 300 Volts:

a. Where switches used in systems of more than 300 volts between conductors, are to be ganged in outlet boxes, provide switches having no exposed live parts or use barriers between the individual switches.

D. Receptacles:

1. Provide GFCI receptacles as indicated on the Drawings.

a. Provide weather resistant GFCI receptacles in all wet or damp areas.

b. As specified in Section 26_05_00, or in accordance with the NEC.

2. Mount non-weatherproof receptacles vertically:

a. Ground slot down.

3. Mount weatherproof receptacles horizontally:

a. Neutral slot up.

3.04 ERECTION, INSTALLATION, APPLICATION, CONSTRUCTION (NOT USED)

3.05 REPAIR/RESTORATION (NOT USED)

3.06 REINSTALLATION (NOT USED)

3.07 FIELD QUALITY CONTROL

A. As specified in Section 26 05 00.

3.08 ADJUSTING (NOT USED)

3.09 CLEANING (NOT USED)

3.10 PROTECTION

A. As specified in Section 26 05 00.

3.11 SCHEDULES (NOT USED)

END OF SECTION

SECTION 262801
LOW VOLTAGE MOLDED CASE CIRCUIT BREAKERS

PART 1 - GENERAL

1.01 SUMMARY

A. Section includes:
   1. Low voltage molded case circuit breakers.

B. Related sections:
   1. Section 01 33 00 - Submittal Procedures.
   2. Section 26 05 00 - Common Work Results for Electrical.
   3. Section 26 24 13 - Switchboards.
   4. Section 26 24 19 - Motor Control Centers.

1.02 REFERENCES

A. As specified in Section 26 05 00.

B. National Electrical Manufacturers Association (NEMA):
   1. AB 3. - Molded Case Circuit Breakers and Their Application.

C. Underwriter's Laboratories (UL):
   1. 489 - Molded-Case Circuit Breakers, Molded-Case Switches, and Circuit- Breaker Enclosures.
   2. 943 - Ground Fault Circuit Interrupters.

1.03 DEFINITIONS

A. As specified in Section 26 05 00.

B. In accordance with UL 489.

1.04 SYSTEM DESCRIPTION

A. Molded case thermal magnetic or motor circuit protector type circuit breakers as indicated on the Drawings and connected to form a completed system.

1.05 SUBMITTALS

A. Furnish submittals as specified in Sections 01 33 00 and 26 05 00.

B. Product data:
   1. Catalog cut sheets.
   2. Manufacturer's time-current curves for all molded case circuit breakers furnished.

1.06 QUALITY ASSURANCE

A. As specified in Section 26 05 00.

B. Low voltage molded case circuit breakers shall be UL listed and labeled.

1.07 DELIVERY, STORAGE AND HANDLING

A. As specified in Section 26 05 00.

1.08 PROJECT OR SITE CONDITIONS

A. As specified in Section 26 05 00.

1.09 SEQUENCING (NOT USED)

1.10 SCHEDULING (NOT USED)

1.11 WARRANTY

A. As specified in Section 26 05 00.

1.12 SYSTEM START-UP

A. As specified in Section 26 05 00.

1.13 OWNER'S INSTRUCTIONS (NOT USED)

1.14 MAINTENANCE (NOT USED)

PART 2 - PRODUCTS

2.01 MANUFACTURERS

A. The following or approved equal:
   1. Schneider Electric/Square D Company.
   2. Acceptable Products: Circuit Breakers specified herein shall be the product of a single manufacturer. Products and manufacturers specified are to establish a standard of quality for design, function, materials, and appearance. Products shall be modified as necessary by the manufacturer for compliance with requirements. Provide the aforementioned specified product and manufacturer without exception, unless approved as a substitute by addendum to the Contract Documents prior to the bid date.

2.02 EXISTING PRODUCTS (NOT USED)

2.03 MATERIALS (NOT USED)

2.04 MANUFACTURED UNITS

A. General:
   1. Conforming to UL 489.
   2. Operating mechanism:
      a. Quick-make, quick-break, non-welding silver alloy contacts.
      b. Common Trip, Open and Close for multi-pole breakers such that all poles open and close simultaneously.
      c. Mechanically trip free from the handle.
      d. Trip indicating handle - automatically assumes a position midway between the manual ON and OFF positions to clearly indicate the circuit breaker has tripped.
      e. Lockable in the "OFF" position.
   3. Arc extinction:
      a. In arc chutes.
   4. Voltage and current ratings:
      a. Minimum ratings as indicated on the Drawings.
      b. Minimum frame size 100A.
   5. Interrupting ratings:
      a. Minimum ratings as indicated on the Drawings.
      b. Modify as required to meet requirements of the short circuit fault analysis.
      c. Not less than the rating of the assembly (panelboard, switchboard, motor control center, etc.)

B. Motor circuit protectors:
   1. Instantaneous only circuit breaker as part of a listed combination motor controller.
   2. Each pole continuously adjustable in a linear scale with 'LO' and 'HI' settings factory calibrated.

2.05 EQUIPMENT (NOT USED)

2.06 COMPONENTS

A. Terminals:
   1. Line and load terminals suitable for the conductor type, size, and number of conductors in accordance with UL 489.

B. Case:
   1. Molded polyester glass reinforced.
   2. Ratings clearly marked.

C. Trip units:
   1. Provide thermal magnetic or solid-state trip units as indicated on the Drawings.

2. Thermal magnetic:
    a. Instantaneous short circuit protection.
    b. Inverse time delay overload.
    c. Ambient or enclosure compensated by means of a bimetallic element.
3. Solid state:
    a. With the following settings as indicated on the Drawings.
        1) Adjustable long time current setting.
        2) Adjustable long time delay.
        3) Adjustable short time pickup.
        4) Adjustable short time delay.
        5) Adjustable instantaneous pickup.
        6) Adjustable ground fault pickup as indicated on the Drawings.
        7) Adjustable ground fault delay as indicated on the Drawings.

D. Molded case circuit breakers for use in panelboards:
1. Bolt-on type.
    a. Plug-in type breakers are not acceptable.
2. Ground fault trip devices as indicated on the Drawings.

2.07 ACCESSORIES (NOT USED)

2.08 MIXES (NOT USED)

2.09 FABRICATION (NOT USED)

2.10 FINISHES (NOT USED)

2.11 SOURCE QUALITY CONTROL

A. Test breakers in accordance with:
1. Specification Section 26 08 50.
2. UL 489.
3. Manufacturer's standard testing procedures.

PART 3 - EXECUTION

3.01 EXAMINATION (NOT USED)

3.02 PREPARATION (NOT USED)

3.03 INSTALLATION

A. Install breakers to correspond to the accepted shop drawings.

3.04 ERECTION, INSTALLATION, APPLICATION, CONSTRUCTION (NOT USED)

3.05 REPAIR/RESTORATION (NOT USED)

3.06 RE-INSTALLATION (NOT USED)

3.07 FIELD QUALITY CONTROL

A. As specified in Section 26 05 00.

3.08 ADJUSTING

A. Adjust trip settings in accordance with Protective Device Coordination Study as accepted by the Engineer and in accordance with manufacturer's recommendations.

B. Adjust motor circuit protectors in accordance with NEC and the manufacturer's recommendation based on the nameplate values of the installed motor.

3.09 CLEANING (NOT USED)

3.10 PROTECTION

A. As specified in Section 26 05 00.

3.11 SCHEDULES (NOT USED)

END OF SECTION

SECTION 263214
DIESEL GENERATOR SETS

PART 1 GENERAL

1.01 DESCRIPTION

A. This Section includes packaged engine-generator sets for emergency power supply with the following features:
   1. Diesel engine.
   2. Unit-mounted cooling system.
   3. Unit-mounted control and monitoring.
   4. Performance requirements for sensitive loads.
   5. Sound attenuated outdoor enclosure.

B. The engine-generator shall be equipped with the necessary devices to meet current Ventura County Air Pollution Control District (VCAPCD) regulations for the operation of a standby diesel generator.

C. Owner will obtain a general permit registration number to submit application, pay for, and obtain an VCAPCD permit from Ventura County to construct and operate the standby generator.

D. Related Work:
   1. Section 01_33_00 – Submittal Procedures.
   2. Section 26_05_00 – Common Work Results for Electrical.

1.02 QUALITY ASSURANCE

A. Factory Testing: Perform specified factory performance and safety shutdown device tests on the actual engine-generator set supplied under this contract and submit report to Resident Engineer for review and approval prior to delivery of engine-generator set to job-site.

B. Pre-delivery inspection at the local dealership / distributorship service facility.

1.03 STANDARDS

A. Referenced Standards: Construct equipment in accordance with the applicable requirements of the following codes and standards:
   1. National Electrical Code (NEC).
   2. American National Standards Institute (ANSI).
   3. National Electrical Manufacturers Association (NEMA).
   4. Institute of Electrical and Electronic Engineers (IEEE).
   5. Insulated Cable Engineers Association (ICEA).
   6. American Society for Testing and Materials (ASTM).
   7. Underwriters' Laboratories, Inc. (UL).
   8. Electrical Generation Systems Association (EGSA).
   9. Ventura County Air Pollution Control District (VCAPCD).

B. Codes and standards referenced shall be considered minimum acceptable work.

1.04 SUBMITTAL REQUIREMENTS

A. Product Data: For each type of packaged engine generator indicated. Include rated capacities, operating characteristics, and furnished specialties and accessories. In addition, include the following:
   1. Thermal damage curve for generator.
   2. Time-current characteristic curves for generator protective device

B. Shop Drawings: Detail equipment assemblies and indicate dimensions, weights, loads, required clearances, method of field assembly, components, and location and size of each field connection.
   1. Dimensioned outline plan and elevation drawings of engine-generator set and other components specified.

2. Design Calculations: Signed and sealed by a qualified professional engineer. Calculate requirements for selecting vibration isolators and seismic restraints and for designing vibration isolation bases.
3. Fuel Tank Base Details: Detail fabrication, including anchorages and attachments to structure and to supported equipment. Include base weights.
4. Wiring Diagrams: Power, signal, and control wiring.
5. Fuel tank mounting and bracing details.
6. Fuel pipe and sensor installation and runs details.

C. Manufacturer Seismic Qualification Certification: Submit certification that complete engine-generator set, batteries, battery racks, accessories, and components will withstand seismic forces defined in Structural Contract Documents. Equipment Importance Factor = 1.5 shall be the basis of the equipment IBC certification.
1. Dimensioned Outline Drawings of Equipment Unit: Identify center of gravity and locate and describe mounting and anchorage provisions.
2. Detailed description of equipment anchorage devices on which the certification is based and their installation requirements.
3. Provide mounting detail and calculation with all necessary details for mounting to concrete pad. The information shall be produced by a structural engineer, licensed in state of California.

D. Qualification Data: For Manufacturer & Dealer.
1. This generator shall be Caterpillar, no substitutions.
2. The manufacturer shall provide factory-trained service and parts support through a factory authorized dealer/supplier that is regularly doing business within 25 miles of the installation.
3. The manufacturer shall have printed literature and brochures describing the standard system specified, not a one of a kind fabrication.
4. As part of qualification process; an authorized dealer/supplier, herein known as the dealer shall represent the manufacturer. To qualify as the dealer/supplier, it must be an authorized Caterpillar and shall have 24-hour service availability. The dealer/supplier must have certified generator service technicians, inventory of parts to support after sales service with additional Factory parts distribution center within 50 miles and can prove 25 years of experience in the engine generator field.

E. Source quality-control test reports.
1. Certified summary of prototype-unit test report.
2. Certified Test Reports: For components and accessories that are equivalent, but not identical, to those tested on prototype unit.
3. Proivde EPA Certification documentation.

F. Field quality-control test reports.

G. Warranty: Special warranty specified in this Section.

H. Acoustic Data
1. Engine generator noise data, including unsilenced combustion exhaust and mechanical noise with engine and radiator.
2. Engine generator muffler octave band insertion loss values at project specific required flow.
3. The generators shall be enclosed in Level 2, Sound-attenuated enclosures. Acoustical Calculations must be provided with the submittal package showing SPL values for the given noise performance. The reports shall include a wall Transmission Loss, Silencer Analysis Intake and Discharge.

1.05 SUBMITTALS REQUIRED FROM ENGINE-GENERATOR SET MANUFACTURER

A. Submit a bill of materials summarizing all manufacturers, part numbers and applicable ratings, or sizes of all equipment or components listed in this section.

B. Submit descriptive literature, product specifications or catalog data sheets for the following.
   1. Engine including:
      a. Make, model, displacement, cylinder arrangement, and aspiration.
      b. RPM and HP at rated kW output.
      c. Engine performance (horsepower) curve.
      d. Manufacturer's certified engine emissions test data at full, 3/4, 1/2 and 1/4 loads including data for NOx, HC, CO, SO2, Particulates and/or PM10 demonstrating compliance with current emissions standards of VCAPCD.
      e. Exhaust gas flow rate, and exhaust gas stack temperature.
      f. Maximum allowable exhaust system backpressure and exhaust pipe diameter at discharge flange of unit.
      g. Exhaust silencer information including dimensional data, weight, flange diameter, exhaust pressure drop, sound rating, and curve showing dBA attenuation or insertion loss data.
      h. Provide fuel consumption in gallons per hour at full, 3/4, 1/2 and 1/4 loads.
      i. Cold cranking amperage required by starting system or manufacturer's recommended battery capacity in cold cranking amps at 32 degrees F.
   2. Engine systems and accessories:
      a. Cooling system including heat exchangers and low coolant alarm device.
      b. Heat exchangers.
      c. Jacket water heater (s) and heater isolation valves.
      d. Isochronous Governor
      e. Starting system including voltage, quantity and size of batteries, battery box for floor installation and line voltage battery charger with cut sheets showing alarm contacts and fault indications.
      f. Engine driven automatic battery charging alternator with solid state voltage regulation (in addition to line voltage battery charger).
      g. Fuel system specifications including maximum fuel consumption, total fuel flow rate (including bypass fuel flow), and cut sheets showing pump, and water separator / filtration system listing fuel flow capacity.
   3. Engine-generator control system including control system, switches, panel, gauges or digital display features, dry contact accessory kit for communication of specified status and alarm conditions to SCADA PLC system, remote annunciator, engine alarms and protective devices.
   4. Generator and Electrical system
      a. Generator construction, windings and pitch, insulation class and treatment, temperature rise,
      b. Voltage dip curves for motor starting
      c. Regulator
      d. PMG excitation
      e. Generator and load bank circuit breaker, and breaker enclosure and bussing. Mounting location of breaker enclosures (to verify code required clearances).
   5. Structural steel side-rail skid base for engine-generator set with anchor bolt locations and dimensioned layout. Submit catalog data and installation instructions for vibration isolators and calculations for size and number of anchor bolts.
   6. Controls, Circuit Breakers and Devices.

C. Detailed description of factory testing program, testing equipment, reporting procedure, and criteria for test passing or failing.

D. Start-up Inspection Report: Submit a start-up inspection report signed by the engine manufacturers authorized field service representative.

1.06 SHOP DRAWINGS REQUIRED FROM ENGINE-GENERATOR MANUFACTURER

A. Submit equipment fabrication drawings, one-line diagrams and schematic diagrams in accordance with Section 26_05_00.

B. Submit system schematic diagram showing all piping and wiring interconnections with sizes and quantities. Submit ladder-type schematic electrical diagrams with legend identifying all devices on diagrams.

1.07 CALCULATIONS REQUIRED FROM ENGINE-GENERATOR MANUFACTURER

A. Generator Load Calculations: Submit computer calculations showing loads, starting current inrushes and maximum transient voltage dip for each sequence listed in the load and step starting sequence summary in part 2.

B. Seismic Calculations: Submit catalog data and seismic certification or provide seismic calculations prepared by a licensed engineer.

C. Torsional and Bending Vibration Calculations: Submit a report of torsional and bending vibration analysis prepared by the engine manufacturer for this specific engine-generator set. Report shall include a summary or conclusion of findings from the analysis.

1.08 REQUIREMENTS FOR APPROVAL TO SHIP ENGINE-GENERATOR SET TO JOBSITE

A. Approved Submittals, Shop Drawings and Calculations for engine-generator set.

B. Approval and issuance of the "Permit to Construct" from VCAPCD.

C. Submit factory test report for review and approval.

D. Submit draft copy of O & M manual for review.

E. Required Pre-Delivery Inspection at the authorized local dealership / distributorship service facility: The diesel generator set shall be inspected by the Resident Engineer and Owner at the authorized local dealership / distributorship facility to verify that it is complete. Installation of all controls and internal wiring shall be completed at the authorized local facility. The following items shall be completed and will be checked at the Pre-Delivery Inspection at authorized local facility:

1. Installation of annunciator panel, elapsed time meter, circuit breakers and other specific components required by the contract specifications.
2. Installation and documentation of the control wiring including the terminal assignment for the dry contact alarm and control interface to the SCADA system
3. Installation of the jacket water heaters and heater isolation valves, fuel water separator / filtration system, oil drain valve, and air filter (equipped with air restriction indicator).
4. Control Panel: “User defined” settings for the control panel need to be programmed into the panel logic prior to delivery to the jobsite to enable the control panel to annunciate the status and alarm features listed in the contract specifications.
5. O & M Manuals: Draft submittal of O & M manual.
6. A punchlist describing corrections will be issued by the Resident Engineer. These corrections shall be completed and inspected by the Resident Engineer prior to delivery to the jobsite.

1.09 SUBMITTALS REQUIRED FOR FIELD INSTALLATION OF ENGINE GENERATOR SET

A. The contractor responsible for the installation of the engine generator set shall coordinate and submit the following shop drawings, descriptive literature, or catalog data sheets for all materials and equipment listed in this section for review and approval.

1. Dimensioned layout of engine generator set showing footprint of side-rail skid base, electrical stub-ups, anchor bolt locations, and offset distances to adjacent walls. Proposed location of unit shall show compliance with the required working clearances in front of circuit breakers, controls and other electrical equipment that will require service while energized per the NEC.
2. Dimensioned layout of reinforced concrete foundation showing the length and width required for the actual footprint of side-rail skid base. Show location of foundation in room with offset dimensions to walls. Provide structural calculations for anchoring engine generator set to reinforced concrete foundation and also for supporting exhaust system.
3. Dimensioned layout of proposed exhaust piping, silencer, thimbles, wall or roof flashing(s), rain cap, and show locations of condensate drain(s) and all supports or hangers. Engine

exhaust outlet shall terminate at least 10 feet from a property line, door or air intake opening and at least 3 feet above the adjacent roof or parapet. Location of proposed exhaust system shall be coordinated to avoid conflict or heat exposure to lights and fire detection or suppression systems. Installing contractor shall show on this dimensioned layout, any lights and fire detection or suppression systems that may conflict with the proposed routing of the exhaust system. Submit the descriptive literature, or catalog data sheets for all materials including piping, fittings, flanges, rain cap, and exhaust piping insulation material.

4. Dimensioned layout of proposed field fuel piping.
5. Provide battery cable data showing wire gauge and maximum length of battery cables for the cold cranking amp rating of the engine-generator set.

1.10 OPERATION AND MAINTENANCE MANUALS

A. General: Provide operation and maintenance manuals in accordance with Section 01_33_00 Submittal Procedures, and Section 01_77_00. The manuals shall include manufacturer's data sheets, and instructional material describing troubleshooting, maintenance, overhaul and replacement parts of each item of equipment and system supplied under this contract.

B. Custom Editing of O & M Manual to Match Actual Equipment and System Supplied:
   1. The O & M manuals must be for the specific or actual piece of equipment or system furnished under this contract.
   2. In the event that the manual covers additional generator models, other generator sizes, or other pieces of equipment or systems that are not furnished under this contract, then Custom Editing of the manual must be done by the local dealership / distributorship which furnished the engine-generator set. The purpose of the custom editing shall be to provide a manual that clearly describes the troubleshooting, maintenance, overhaul and replacement parts of each item of equipment and system actually furnished under this contract. If the manual includes information for additional generator models, other generator sizes, or other pieces of equipment or systems that are not furnished under this contract, the manual must be custom edited according to the following guidelines:
      a. All information, procedures, or parts which are extraneous (irrelevant, or non-applicable) to the equipment and system actually furnished under this contract shall be crossed out, leaving only the applicable portions un-marked.
      b. Editing marks shall be dark enough to be legible with photocopy or scanning procedures.
      c. Use of "highlighter" pens is not allowed since color shading will not photocopy or scan properly.
      d. Other alternate methods of editing shall be discussed with the engineer prior to editing.

C. Provide a separately tabbed section in the O & M Manual marked "Replacement Parts", with a bill of materials listing of all common field replaced spare parts and including the part numbers for replacement filters, belts, lamps hoses, thermostat, and fuses.

D. Provide a separately tabbed section in the O & M Manual marked "Digital Access Codes", and include a letter disclosing all passwords or codes required for access to control functions including any required programming code or passwords.

E. Provide additional troubleshooting and repair service manuals. These manuals cover work beyond the scope of ordinary O & M manuals and include troubleshooting and diagnosis procedures covering the engine, emissions system, control system, and generating system.

1.11 SERVICES OF FACTORY AUTHORIZED FIELD SERVICE TECHNICIAN

A. Provide equipment manufacturers services at the job site for each site for the minimum man-days listed below, travel time excluded:
   1. Two man-days for support services including a pre-startup inspection report and adjustment of the equipment, start-up and field testing supervision including field transfer sequence tests and field load bank tests.

2. One man-day to instruct the owner's personnel in the operation and maintenance of the equipment (on-site). Submit final copies of previously reviewed operation and maintenance manuals at least ten (10) working days prior to this instruction. Furnish Resident Engineer with completed warranty documentation.

1.12 PROJECT CONDITIONS

A. Environmental Conditions: Engine-generator system shall withstand the following environmental conditions without mechanical or electrical damage or degradation of performance capability:
   1. Ambient Temperature: -2 deg C (28 deg F) to 42 deg C (108 deg F).
   2. Relative Humidity: 0 to 95 percent.
   3. Altitude: Sea level to 500.0 feet (152.4 m).

1.13 COORDINATION

A. Coordinate size and location of concrete bases for package engine generators and radiator mounted on grade. Concrete, reinforcement, and formwork requirements are specified with concrete.

1.14 WARRANTY

A. Special Warranty: Manufacturer's standard form in which manufacturer agrees to repair or replace components of packaged engine generators and associated auxiliary components that fail in materials or workmanship within specified warranty period.
   1. Warranty Period: Twenty-four (24) months warranty (diesel generator) from date of Substantial Completion.

1.15 PERMITS

A. Permits Required from Local Air Quality District: Owner will pay permit fees and obtain “Permit to Construct” from the VCAPCD. Assist permitting procedure as needed below. Owner is responsible for any and all costs associated with permitting.
   1. Provide engine emissions data sheets demonstrating compliance with the current standards of VCAPCD.
   2. Owner will obtain an “Application for Authority to Construct and Permit to Operate” form from VCAPCD, and fill in all information pertaining to emissions and engine-generator set only.
   3. Owner will pay for and obtain VCAPCD approval, and will forward original copy of the “Permit to Construct” to Resident Engineer prior to approval or delivery of engine-generator set.
   4. Contractor shall install engine-generator set in compliance with conditions in permit, communicate any remaining fees (if any), and obtain field approval of VCAPCD inspector.

1.16 MAINTENANCE SERVICE

A. Initial Maintenance Service: Beginning at Substantial Completion, provide one (1) year full maintenance by skilled employees of manufacturer's designated service organization. Include quarterly exercising to check for proper starting, load transfer, and running under load. Include routine preventive maintenance as recommended by manufacturer and adjusting as required for proper operation. Provide parts and supplies same as those used in the manufacture and installation of original equipment.

PART 2 PRODUCTS

2.01 MANUFACTURERS

A. Available Manufacturers: Subject to compliance with requirements, manufacturers offering products that may be incorporated into the Work include, but are not limited to, the following:
   1. Caterpillar, no substitutions.

B. Manufacturers: Subject to compliance with requirements, provide products by one of the following:
   1. Caterpillar, no substitutions.

C. Basis-of-Design Product - owner furnished, installed by contractor:
   1. Subject to compliance with requirements, provide Caterpillar Model C9 300kW with alternator LC6134B, 60Hz, 208Y/120VAC, 3 phase at 0.8PF standby.

2.02 ENGINE-GENERATOR SET

A. Steel material shall comply with UL 845 and CSA requirements.

B. Factory-assembled and -tested, engine-generator set.

C. Mounting Frame: Maintain alignment of mounted components without depending on concrete foundation; and have lifting attachments.
   1. Rigging Diagram: Inscribed on metal plate permanently attached to mounting frame to indicate location and lifting capacity of each lifting attachment and generator-set center of gravity.

D. Capacities and Characteristics:
   1. Power Output Ratings: Nominal ratings as indicated, with capacity as required to operate as a unit as evidenced by records of prototype testing.
   2. Output Connections: Three-phase, 4-wire.
   3. Nameplates: For each major system component to identify manufacturer's name and address, and model and serial number of component.

E. Generator-Set Performance:
   1. Oversizing generator compared with the rated power output of the engine is permissible to meet specified performance.
      a. Nameplate Data for Oversized Generator: Show ratings required by the Contract Documents rather than ratings that would normally be applied to generator size installed.
      b. Alternator must have a maximum temperature rise of 130˚C
   2. Steady-State Voltage Operational Bandwidth: 1 percent of rated output voltage from no load to full load.
   3. Transient Voltage Performance: Not more than 10 percent variation for 50 percent step-load increase or decrease. Voltage shall recover and remain within the steady-state operating band within 3 seconds when tested with the Diesel Engine.
   4. Steady-State Frequency Operational Bandwidth: Plus or minus 0.25 percent of rated frequency from no load to full load.
   5. Steady-State Frequency Stability: When system is operating at any constant load within the rated load, there shall be no random speed variations outside the steady-state operational band and no hunting or surging of speed.
   6. Transient Frequency Performance: Less than 5% variation for 50 percent step-load increase or decrease. Frequency shall recover and remain within the steady-state operating band within three seconds.
   7. Output Waveform: At no load, harmonic content measured line to neutral shall not exceed 2 percent total with no slot ripple. Telephone influence factor, determined according to NEMA MG 1, shall not exceed 50 percent.
   8. Sustained Short-Circuit Current: For a 3-phase, bolted short circuit at system output terminals, system shall supply a minimum of 300 percent of rated full-load current for not less than 10 seconds and then clear the fault automatically, without damage to winding insulation or other generator system components.
   9. Excitation System: Performance shall be unaffected by voltage distortion caused by nonlinear load.
      a. Provide permanent magnet excitation for power source to voltage regulator.
   10. Start Time: Comply with NFPA 110, Type 10, (10 seconds) system requirements.
   11. Motor Starting: Generator shall produce skVA with no more than a 25% instantaneous voltage dip. Subtransient Reactance (X”d) shall be no more than 0.139 per unit.
   12. Generator Mechanical Design:

a. Mechanical design shall be able to withstand rotor over speed, acceleration, and short circuit fault of the generator.
b. Generator construction shall be:
   1) Synchronous
   2) Four pole
   3) Revolving field
   4) NEMA type II enclosure with air intake filtration and drip-proof air exhaust
   5) Drip-proof construction with corrosion resistant hardware
   6) Air-cooled by direct drive, centrifugal, non-sparking, non-plastic, blower fan.
   7) Direct coupled to engine with flexible disc (coupling)
c. Windings, winding termination leads, and amortisseur ring shall be copper.

2.03 ENGINE

A. The engine shall be liquid cooled, diesel fueled, turbocharged after cooled engines of 4-cycle design with a minimum TIER 3 for less than 750 bhp compliance engine. The units shall require a minimum rated standby output of the kW as shown in Section 2.01.C at an operating speed of 1800 RPM. The engine governor shall be fully electronic type.

B. The specified engine shall be VCAPCD certified.

C. The engine shall be capable of satisfactory performance on No. 2 fuel oil (EMA FPQ-1a or b). Diesel engines requiring a premium fuel will not be considered.

D. Rated Engine Speed: 1800 rpm.

E. Maximum Piston Speed for Four-Cycle Engines: 2250 fpm (11.4 m/s).

F. Lubrication System: The following items are mounted on engine or skid:
   1. Filter and Strainer: Rated to remove 90 percent of particles 5 micrometers and smaller while passing full flow.
   2. Thermostatic Control Valve: Control flow in system to maintain optimum oil temperature. Unit shall be capable of full flow and is designed to be fail-safe.
   3. Crankcase Drain: Arranged for complete gravity drainage to an easily removable container with no disassembly and without use of pumps, siphons, special tools, or appliances.

G. Engine Fuel System:
   1. Main Fuel Pump: Mounted on engine. Pump ensures adequate primary fuel flow under starting and load conditions.
   2. Relief-Bypass Valve: Automatically regulates pressure in fuel line and returns excess fuel to source.

H. Coolant Jacket Heater: Thermal circulation type water heater with integral thermostatic control, sized to maintain engine jacket water at 90 degrees and suitable for operation on 208VAC single phase. Comply with NFPA 110 requirements for Level 1 equipment for heater capacity.

I. Governor: Electronic type, with speed sensing

J. Cooling System: Closed loop, liquid cooled, with radiator factory mounted on engine-generator-set mounting frame and integral engine-driven coolant pump.
   1. Coolant: Solution of 50 percent ethylene-glycol-based antifreeze and 50 percent distilled water, with anticorrosion additives as recommended by engine manufacturer.
   2. Size of Radiator: Adequate to contain expansion of total system coolant from cold start to 110 percent load condition.
   3. Temperature Control: Self-contained, thermostatic-control valve modulates coolant flow automatically to maintain optimum constant coolant temperature as recommended by engine manufacturer.
   4. Coolant Hose: Flexible assembly with inside surface of nonporous rubber and outer covering of aging-, ultraviolet-, and abrasion-resistant fabric.
      a. Rating: 50-psig (345-kPa) maximum working pressure with coolant at 180 deg F (82 deg C), and noncollapsible under vacuum.

b. End Fittings: Flanges or steel pipe nipples with clamps to suit piping and equipment connections.

K. Air-Intake Filter: Standard-duty, engine-mounted air cleaner with replaceable dry-filter element and "blocked filter" indicator.

L. Starting System:
1. Components: Sized so they will not be damaged during a full engine-cranking cycle with ambient temperature at maximum specified in Part 1 "Project Conditions" Article.
2. Cranking Motor: Heavy-duty unit that automatically engages and releases from engine flywheel without binding.
3. Cranking Cycle: As required by NFPA 110 for system level specified.
4. Battery: Adequate capacity within ambient temperature range specified in Part 1 "Project Conditions" Article to provide specified cranking cycle at least three times without recharging.
5. Battery Cable: Size as recommended by engine manufacturer for cable length indicated. Include required interconnecting conductors and connection accessories.
6. Battery Compartment: Factory supplied as part of IBC certified package. Include accessories required to support and fasten batteries in place.
7. Battery-Charging Alternator: Factory mounted on engine with solid-state voltage regulation and 35-A minimum continuous rating.
8. Battery Charger: Current-limiting, automatic-equalizing and float-charging type. Unit shall comply with UL 1236 and include the following features:
   a. Operation: Equalizing-charging rate of 10 A shall be initiated automatically after battery has lost charge until an adjustable equalizing voltage is achieved at battery terminals. Unit shall then be automatically switched to a lower float-charging mode and shall continue to operate in that mode until battery is discharged again.
   b. Automatic Temperature Compensation: Adjust float and equalize voltages for variations in ambient temperature from minus 40 deg C to plus 60 deg C to prevent overcharging at high temperatures and undercharging at low temperatures.
   c. Automatic Voltage Regulation: Maintain constant output voltage regardless of input voltage variations up to plus or minus 10 percent.
   d. Ammeter and Voltmeter: Flush mounted in door. Meters shall indicate charging rates.
   e. Safety Functions: Sense abnormally low battery voltage and close contacts providing low battery voltage indication on control and monitoring panel. Sense high battery voltage and loss of ac input or dc output of battery charger. Either condition shall close contacts that provide a battery-charger malfunction indication at system control and monitoring panel.
   f. Enclosure and Mounting: NEMA 1 (IP20).

2.04 FUEL OIL STORAGE

A. The tank shall be manufactured in compliance with the following codes and standards:
1. UL 142 – Underwriters Laboratories Standard
2. NFPA 30 - Flammable and Combustible Liquids
3. NFPA 37 - The Standard for Installation and use of Stationary Combustible Engine and Gas Turbines
4. NFPA110 – The Standard for Standby and Emergency Power Systems

B. Provide a double wall secondary containment-type sub base fuel storage tank with a storage capacity such that the generator will operate for a minimum of 24 hours at full load. The tank shall be constructed of corrosion resistant steel and shall be UL 142 listed and labeled. The fuel tank shall include the following features:
1. Inner tank: 10 gauge steel
2. Outer tank: 7 gauge steel
3. Electrical stub ups
4. Normal & emergency vents - Vents shall be extended to 12” above roof of enclosure, or 12’ above grade, whichever is higher

5. Two (2) removable fuel supply & return dip tubes
6. 2” Lockable fuel fill
7. 5 gallon AST Spill Containment with lockable lid
8. Signage/Labeling: "Diesel Fuel, Flammable, No Smoking" & NFPA Label
9. Emergency tank and basin vents
10. Mechanical Fuel level gauge
11. High (90%), Critical High (95%) and low level float switches to indicate fuel level
12. Leak detector switch
13. Basin drain
14. Integral lifting provisions
15. Overfill Prevention

C. Tank construction shall consist of reinforced steel channel with a 5,000 lbs. load rating per generator set mounting hole location. The tank shall include full height gussets at each generator set mounting hole location.

D. Sub base tank shall include a welded steel containment basin, sized at a minimum of 110% of the tank capacity to prevent escape of fuel into the environment in the event of a tank rupture.

E. The tank interior shall be finished rust proofing epoxy coating. The tank shall be painted as per the following procedure:
   1. All carbon steel surfaces shall be power tool cleaned per sspc-sp3 and painted as follows:
      a. Prime – one coat of Primer 2 (2-4 mils DFT)
      b. Intermediate – one coat of Industrial Polyurethane (Ameron Amerlock 2) (1-1.5 mils DFT)
      c. Finished – one coat of Ameron PSX 700 Polyurethane texture (2-3 mils DFT)
      d. Finish color to match sound enclosure (or gloss black)
   2. Finish coat performance shall be capable of showing no signs of blistering after 5500 hours of salt spray (ASTM B117). Primer and Finish coat paint specification sheets shall be provided with the submittal.

2.05 CONTROL AND MONITORING

A. Provide a fully solid-state, microprocessor based, generator set mounted control (GCCP 1.2). The control panel shall be designed and built by the engine manufacturer. The control shall provide all operating, monitoring, and control functions for the generator set. The control panel shall provide real time digital communications to all engine and regulator controls via SAE J1939.

B. The generator set control shall be tested and certified to the following environmental conditions:
   1. –40°C to +70°C Operating Range
   2. 100% condensing humidity, 30°C to 60°C
   3. IP22 protection for rear of controller; IP55 when installed in control panel
   4. 5% salt spray, 48 hours, +38°C, 36.8V system voltage
   5. Sinusoidal vibration 4.3G's RMS, 24-1000Hz
   6. Electromagnetic Capability (89/336/EEC, 91/368/EEC, 93/44/EEC, 93/68/EEC, BS EN 50081-2, 50082-2)

C. Shock: withstand 15GThe following functionality shall be integral to the control panel.
   1. The control shall include a minimum 33 x 132 pixel, 24mm x 95mm, positive image, transflective LCD display with text based alarm/event descriptions.
   2. The control shall include a minimum of 3-line data display
   3. Audible horn for alarm and shutdown with horn silence switch
   4. Standard ISO labeling
   5. Multiple language capability
   6. Remote start/stop control
   7. Local run/off/auto control integral to system microprocessor
   8. Cooldown timer

9. Speed adjust
10. Lamp test
11. Emergency stop push button
12. Voltage adjust
13. Voltage regulator V/Hz slope - adjustable
14. Password protected system programming

D. The controls shall provide the following digital readouts for the engine and generator. All readings shall be indicated in either metric or English units
   1. Engine
      a. Engine oil pressure
      b. Engine oil temperature
      c. Engine coolant temperature
      d. Engine RPM
      e. Battery volts
      f. Engine hours
      g. Engine crank attempt counter
      h. Engine successful start counter
      i. Service maintenance interval
      j. Real time clock
      k. Engine exhaust stack temperature
   2. Generator
      a. Generator AC volts (Line to Line, Line to Neutral and Average)
      b. Generator AC current (Avg and Per Phase)
      c. Generator AC Frequency
      d. Generator kW (Total and Per Phase)
      e. Generator kVA (Total and Per Phase)
      f. Generator kVAR (Total and Per Phase)
      g. Power Factor (Avg and Per Phase)
      h. Total kW-hr
      i. Total kVAR-hr
      j. % kW
      k. % kVA
      l. % kVAR
   3. Voltage Regulation
      a. Excitation voltage
      b. Excitation current

E. The control shall monitor and provide alarm indication and subsequent shutdown for the following conditions. All alarms and shutdowns are accompanied by a time, date, and engine hour stamp that are stored by the control panel for first and last occurrence:
   1. Engine Alarm/Shutdown
      a. Low oil pressure alarm/shutdown
      b. High coolant temperature alarm/shutdown
      c. Loss of coolant shutdown
      d. Overspeed shutdown
      e. Overcrank shutdown
      f. Emergency stop shutdown
      g. Low coolant temperature alarm
      h. Low battery voltage alarm
      i. High battery voltage alarm
      j. Control switch not in auto position alarm
      k. Battery charger failure alarm
   2. Generator Alarm/Shutdown

a. Generator phase sequence
b. Generator over voltage
c. Generator under voltage
d. Generator over frequency
e. Generator under frequency
f. Generator reverse power (real and reactive)
g. Generator overcurrent

3. Voltage Regulator Alarm/Shutdown
   a. Loss of excitation alarm/shutdown
   b. Instantaneous over excitation alarm/shutdown
   c. Time over excitation alarm/shutdown
   d. Rotating diode failure
   e. Loss of sensing
   f. Loss of PMG

F. The Controller shall include the ability to accept programmable digital input signals. The signals may be programmed for either high or low activation using programmable Normally Open or Normally Closed contacts.
   1. The control shall include the ability to operate programmable relay output signals, integral to the controller. The output relays shall be rated for 2A @ 30VDC and consist of six (6) Form A (Normally Open) contacts and two (2) Form C (Normally Open & Normally Closed) contacts.
   2. The control shall include the ability to operate two (2) discrete outputs, integral to the controller, which are capable of sinking up to 300mA

G. All engine, voltage regulator, control panel and accessory units shall be accessible through a single electronic service tool. The following maintenance functionality shall be integral to the generator set control

H. Engine running hours display
   1. Service maintenance interval (running hours or calendar days)
   2. Engine crank attempt counter
   3. Engine successful starts counter
   4. 40 events are stored in control panel memory
   5. Programmable cycle timer that starts and runs the generator for a predetermined time. The timer shall use 7 user-programmable sequences that are repeated in a 7-day cycle. Each sequence shall have the following programmable set points:
      a. Day of week
      b. Time of day to start
      c. Duration of cycle.
   6. Run time meter shall be non-resettable.

I. Remote Communications: The control shall include Modbus RTU communications as standard via RS-485 half duplex with configurable baud rates from 2.4k to 57.6k. The control shall include a module for Modbus TCP communications via Ethernet, Caterpillar Device Server or approved equal.

J. Local Annunciator (NFPA 99/110, CSA 282): Provide a local, control panel mounted, annunciator to meet the requirements of NFPA 110, Level 1.
   1. Annunciators shall be networked directly to the generator set control
   2. Local Annunciator shall include a lamp test pushbutton, alarm horn and alarm acknowledge pushbutton
   3. Provide the following individual light indications for protection and diagnostics
      a. Overcrank
      b. Low coolant temperature
      c. High coolant temperature warning
      d. High coolant temperature shutdown

e. Low oil pressure warning
f. Low oil pressure shutdown
g. Overspeed
h. Low coolant level
i. EPS supplying load
j. Control switch not in auto
k. High battery voltage
l. Low battery voltage
m. Battery charger AC failure
n. Emergency stop
o. Spare
p. Spare

K. Remote Annunciator (NFPA 99/110, CSA 282): Provide a remote annunciator to meet the requirements of NFPA 110, Level 1.
1. The annunciator shall provide remote annunciation of all points stated above and shall incorporate ring-back capability so that after silencing the initial alarm, any subsequent alarms will sound the horn.
2. Ability to be located up to 4000 ft from the generator set

L. Remote emergency stop button:
1. Mushroom-style push button.
2. NEMA 4 enclosure.
3. LED-illuminated.
4. Surface mount.
5. Clear, hinged cover with provision for padlock/seal.
6. Shipped loosed, installed and wired by Contractor.

2.06 GENERATOR OVERCURRENT AND FAULT PROTECTION

A. Generator Circuit Breaker: Molded-case, electronic-trip type; 100 percent rated; complying with NEMA AB 1 and UL 489.
1. Tripping Characteristic: Designed specifically for generator protection.
2. Trip Rating: Matched to generator rating and per plans.
3. Shunt Trip: Connected to trip breaker when generator set is shut down by other protective devices.
4. Auxiliary contacts & bell Alarm
5. Mounting: Adjacent to or integrated with control and monitoring panel.

B. Ground-Fault Indication: Comply with NFPA 70, "Emergency System" signals for ground-fault. Integrate ground-fault alarm indication with other generator-set alarm indications.

2.07 OUTDOOR GENERATOR-SET ENCLOSURE

A. One sound-attenuated enclosure shall be provided which shall enclose the diesel generator set and provide sound mitigation to 71 dBA at 23 feet. The enclosure shall allow the generator set to operate at full rated load under the following Design Criteria:
1. Weather-resistant acoustical enclosure.
2. Rigidity: Wind load resistant to 110 mph.
3. Roof load integrity equal to 42 lbs. per square foot.
4. Rain resistant to 4” per hour.
5. Design pressure drop less than or equal to 0.5 inches of water across enclosure.
6. Performance of the enclosures shall be designed to reduce the gen-set equipment unsilenced noise levels to approximately 72 dBA distance of 23 feet from the enclosure, in a free field environment.

B. The enclosure shall include a critical grade silencer interally incorporated with the enclosure.

C. The enclosure shall meet the following fire related parameters, per NFPA No. 255 or ASTM E84, flame spread = 15, smoke developed = 0 and fuel contributed = 0.

D. Enclosure Assembly:
   1. The acoustical enclosure shall consist of one (1) prefabricated drop over module designed to be field bolted to a structural base skid, tank or foundation.
   2. The enclosure shall contain roof sections, sidewalls, cooling/combustion air inlet silencer system and cooling air discharge silencer system.
   3. Provide access clearance to all equipment in accordance with the National Electrical Code.
   4. The unit intake and discharge ventilation openings shall be attenuated with line-of-site type silencing, combined with stationary, weather louvers and bird screens.
   5. Louvers shall be durable and of such design that they aid in dispersion and removal of water from the air-stream.
   6. The acoustical baffles for both the intake and discharge shall be designed to be aerodynamic functional, and lightweight.
   7. Submit general arrangement AutoCAD drawings for customer approval.

E. Construction:
   1. Construction of the enclosure shall consist of 4” thick acoustical weather tight wall and roof panels fabricated of 14 gauge galvannealed steel outer skin. Panels are packed with 4 lbs./cu. ft. density mineral wool acoustical insulation which is protected by a 2 mil poly film liner installed between the perforated inner skin and the insulation material. The enclosure framing will consist of an all welded A-36 structural steel tubing and base channel members. Four (4) lifting lugs, designed to lift the total enclosure weight, are provided. The base channel will be provided with mounting holes that will allow the enclosure to fasten directly to the base skid, tank or foundation.
   2. Wall panels shall consist of 16” wide individual formed sections for rigidity and wall flatness; panels will be skip welded together inside and caulked weather tight outside.
   3. Standing seam roof with formed channel roof members (sized to accommodate loading). Exclusive seal welded roof construction.
   4. Inlet and discharge weather louvers shall be 7” deep in direction of airflow with blades positioned on a 45-degree angle for water run-off.
   5. Engine exhaust roof opening(s) with stainless steel weather covers.
   6. Roof mounting muffler support channels-two (2) for each enclosure.
   7. Rain lips over all exterior doors.

F. Hardware: All doors will be factory mounted and will be furnished with the following:
   1. Hinges: Component Hardware Group, Heavy duty, 316 stainless steel.
   2. Latches: Component Hardware Group, Heavy duty, 316 stainless steel construction with panic hardware on the interior side.
   3. The doors shall be fitted with Neoprene gasket around the perimeter of the door. Double sealed when required.
   4. All door hinges, latches, and devices shall be secured with stainless steel bolting hardware.
   5. Door holdbacks when possible.

G. Standard Enclosure Paining
   1. All exterior enclosure galvannealed surfaces will be solvent cleaned and painted as follows:
      a. Base coat – one coat of American Coatings Polyurethane (1-1.5 mils DFT).
      b. Top coat – one coat of American Coatings Polyurethane (0.5-1 mils DFT).

H. All carbon steel surfaces to be cleaned per SSPC-SP3 and painted with the following:
   1. Primer – one coat American Coatings Industrial Primer (3-4 mils DFT).
   2. Intermediate & top coat to be the same as above.
   3. Interior enclosure wall surfaces will not be painted.
   4. Color: Caterpillar factory white.

I. Oil and Water Drains:

1. Enclosure manufacturer shall extend lube oil and coolant drains to the couplings with flexible hose and shall include a brass ball valve on the inside of the enclosure and a drain plug on the outside. The couplings shall be labeled for each.
2. Terminate crankcase breather tubes in the radiator discharge air stream.

2.08 VIBRATION ISOLATION DEVICES

A. Restrained Spring Isolators: Freestanding, steel, Caldyn open-spring isolators with seismic restraint.
   1. Housing: Steel with resilient vertical-limit stops to prevent spring extension due to wind loads or if weight is removed; factory-drilled baseplate bonded to 1/4-inch- (6-mm-) thick, elastomeric isolator pad attached to baseplate underside; and adjustable equipment mounting and leveling bolt that acts as blocking during installation.
   2. Outside Spring Diameter: Not less than 80 percent of compressed height of the spring at rated load.
   3. Minimum Additional Travel: 50 percent of required deflection at rated load.
   4. Lateral Stiffness: More than 80 percent of rated vertical stiffness.
   5. Overload Capacity: Support 200 percent of rated load, fully compressed, without deformation or failure.
   6. Mounted between the generator skid and the sub-base fuel tank.

2.09 WARNING NAMEPLATES

A. Provide plastic laminate red nameplates suitable for outdoor use with minimum 1/2-inch high white letters. Nameplate shall read "WARNING - THIS MACHINE MAY START WITHOUT WARNING BY REMOTE SIGNAL. DO NOT WORK ON MACHINE UNLESS MASTER SELECTOR SWITCH IS OFF". Mount nameplates on each side of the generator.

2.10 SOURCE QUALITY CONTROL

A. Prototype Testing: Factory test engine-generator set using same engine model, constructed of identical or equivalent components and equipped with identical or equivalent accessories.
   1. Tests: Comply with NFPA 110, Level 1 Energy Converters and with IEEE 115. In addition, the equipment engine, skid, cooling system, and alternator shall have been subjected to actual prototype tests to validate the capability of the design under the abnormal conditions noted in NFPA110. Calculations and testing on similar equipment which are allowed under NFPA110 are not sufficient to meet this requirement.

B. Project-Specific Equipment Tests: Before shipment, factory test engine-generator set and other system components and accessories manufactured specifically for this Project. Perform tests at rated load and power factor for a minimum of 2 hours. Include the following tests:
   1. Test engine generator set and other system components and accessories manufactured for this Project to demonstrate compatibility, functionality, and reliability.
   2. Full load run.
   3. Maximum power.
   4. Voltage regulation.
   5. Transient and steady-state governing.
   6. Single-step load pickup. Retain subparagraph below if factory tests will be witnessed by Owner's representative.

PART 3 EXECUTION

3.01 EXAMINATION

A. Examine areas, equipment bases, and conditions, with Installer present, for compliance with requirements for installation and other conditions affecting packaged engine-generator performance.

B. Examine roughing-in of piping systems and electrical connections. Verify actual locations of connections before packaged engine-generator installation.

C. Proceed with installation only after unsatisfactory conditions have been corrected.

3.02 INSTALLATION

A. Comply with packaged engine-generator manufacturers' written installation and alignment instructions and with NFPA 110.

B. Install packaged engine generator to provide access, without removing connections or accessories, for periodic maintenance.

C. Install packaged engine generator sub-base fuel tank based on CA Structural PE Engineer stamped anchoring calculation. Secure sets to anchor bolts installed in concrete bases. Concrete base construction is shown on Design drawings.

D. Electrical Wiring: Install electrical devices furnished by equipment manufacturers but not specified to be factory mounted.

3.03 CONNECTIONS

A. Piping installation requirements are specified in other Sections. Drawings indicate general arrangement of piping and specialties.

B. Connect fuel, cooling-system, and exhaust-system piping adjacent to packaged engine generator to allow service and maintenance.

C. Connect cooling-system water piping to engine-generator set and radiator with flexible connectors.

D. Connect engine exhaust pipe to engine with flexible connector.

E. Connect fuel piping to engines with a gate valve and union and flexible connector.

F. Ground equipment according to Section 26_05_26 "Grounding and Bonding."

G. Connect wiring according to Section 26_05_19 “600-Volt or Less Wires and Cables."

3.04 IDENTIFICATION

A. Identify system components according to Section 26_05_00 "Common Work Results for Electrical."

3.05 FIELD QUALITY CONTROL

A. Manufacturer's Field Service: Engage a factory-authorized service representative to inspect, test, and adjust components, assemblies, and equipment installations, including connections. Report results in writing.

B. Perform tests and inspections and prepare test reports.
   1. Manufacturer's Field Service: Engage a factory-authorized service representative to inspect components, assemblies, and equipment installations, including connections, and to assist in testing.

C. Tests and Inspections:
   1. Perform NFPA 110 Acceptance Tests: Perform tests required by NFPA 110 including, but not limited to, 4-hour load test and single-step full-load pickup test.
   2. Battery Tests: Equalize charging of battery cells according to manufacturer's written instructions. Record individual cell voltages.
      a. Measure charging voltage and voltages between available battery terminals for full-charging and float-charging conditions. Check electrolyte level and specific gravity under both conditions.
      b. Test for contact integrity of all connectors. Perform an integrity load test and a capacity load test for the battery.
      c. Verify acceptance of charge for each element of the battery after discharge.
      d. Verify that measurements are within manufacturer's specifications.
   3. Battery-Charger Tests: Verify specified rates of charge for both equalizing and float-charging conditions.
   4. System Integrity Tests: Methodically verify proper installation, connection, and integrity of each element of engine-generator system before and during system operation. Check for air, exhaust, and fluid leaks.

5. Voltage and Frequency Transient Stability Tests: Use recording oscilloscope or Factory computer software “Electronic Technician” to measure voltage and frequency transients for 50 and 100 percent step-load increases and decreases, and verify that performance is as specified.

D. Coordinate tests with tests for transfer switches and run them concurrently.

E. Test instruments shall have been calibrated within the last 12 months, traceable to standards of NIST, and adequate for making positive observation of test results. Make calibration records available for examination on request.

F. Operational Test: After electrical circuitry has been energized, start units to confirm proper motor rotation and unit operation.

G. Test and adjust controls and safeties. Replace damaged and malfunctioning controls and equipment.

H. Remove and replace malfunctioning components and retest as specified above.

I. Retest: Correct deficiencies identified by tests and observations and retest until specified requirements are met.

J. Report results of tests and inspections in writing. Record adjustable relay settings and measured insulation resistances, time delays, and other values and observations. Attach a label or tag to each tested component indicating satisfactory completion of tests.

K. Inspect and test in accordance with Specification Section 26 08 50.

3.06 DEMONSTRATION

A. Engage a factory-authorized service representative to train Owner's maintenance personnel to adjust, operate, and maintain packaged engine generators for a minimum of four (4) hours.

END OF SECTION

SECTION 263624
AUTOMATIC TRANSFER SWITCHES

PART 1 GENERAL

1.01 SCOPE

A. Automatic delayed transition transfer switches (ADTS) shall be the number of poles, amperage, voltage and withstand current ratings as shown on the plans. Each ADTS shall consist of a power transfer switch unit and a control panel interconnected to provide complete automatic operation. All transfer switches shall be the product of the same manufacturer.

B. The ADTS shall transfer the load in delayed transition (break-before-make) mode. Transfer is accomplished with a user-defined interruption period in both directions adjustable from 1 second to 5 minutes in at least 15 increments.

1.02 CODES AND STANDARDS

A. The automatic transfer switch and controls shall conform to the requirements of:
   1. UL 1008 - Standard for Transfer Switch Equipment
   2. CSA certified to CSA 22.2 No. 178 Automatic Transfer Switches
   3. IEC 60947-6-1 Low-voltage Switchgear and Controlgear; Multifunction equipment; Automatic Transfer Switching Equipment
   4. NFPA 70 - National Electrical Code
   5. NFPA 99 - Essential Electrical Systems for Health Care Facilities
   6. NFPA 110 - Emergency and Standby Power Systems
   7. IEEE Standard 446 - IEEE Recommended Practice for Emergency and Standby Power Systems for Commercial and Industrial Applications
   8. NEMA Standard ICS10 (formerly ICS2-447) - AC Automatic Transfer Switches
   9. UL 508 Industrial Control Equipment

1.03 SUBMITTALS

A. Section 01_33_00 – Submittal Procedures

B. Product Data: For each type of product indicated. Include rated capacities, weights, operating characteristics, furnished specialties, and accessories.
   1. Technical data on all major components of all transfer switches and other products described in this section. Data is required for the transfer switch mechanism, control system, cabinet, and protective devices specifically listed for use with each transfer switch. Include steady state and fault current ratings, weights, operating characteristics, and furnished specialties and accessories.
   2. Single Line Diagram: Show connections between transfer switch, power sources and load

C. Shop Drawings: Dimensioned plans, elevations, sections, and details showing minimum clearances, conductor entry provisions, gutter space, installed features and devices, and material lists for each switch specified.
   1. Dimensioned outline drawings of assembly, including elevations, sections, and details including minimal clearances, conductor entry provisions, gutter space, installed features and devices and material lists for each switch specified.
   2. Internal electrical wiring and control drawings.
   3. Interconnection wiring diagrams, showing recommended conduit runs and point-to-point terminal connections to generator set.
   4. Installation and mounting instructions, including information for proper installation of equipment to meet seismic requirements.

D. Manufacturer Seismic Qualification Certification: Submit certification that transfer switch accessories, and components will withstand seismic forces defined in Division 26 Section "Vibration and Seismic Controls for Electrical Systems." Include the following:

1. Seismic certification, as required for site conditions. Seismic certifications shall be third-party certified, and based on testing. Certification based on calculations does not meet this requirement.
    a. The term "withstand" means "the unit will remain in place without separation of any parts from the device when subjected to the seismic forces specified and the unit will be fully operational both during and after the seismic event."
2. Dimensioned Outline Drawings of Equipment Unit: Identify center of gravity and locate and describe mounting and anchorage provisions.
3. Detailed description of equipment anchorage devices on which the certification is based and their installation requirements.

E. Manufacturer and Supplier Qualification Data
1. The transfer switch manufacturer shall be certified to ISO 9001 International Quality Standard and shall have third party certification verifying quality assurance in design/development, production, installation, and service, in accordance with ISO 9001.
2. The manufacturer of this equipment shall have produced similar equipment for a minimum period of 10 years. When requested, an acceptable list of installations with similar equipment shall be provided demonstrating compliance with this requirement.

F. Operation and Maintenance Data: For each type of product to include in emergency, operation, and maintenance manuals. Include the following:
1. Features and operating sequences, both automatic and manual.
2. List of all factory settings of relays, timers and protective devices; provide setting and calibration instructions where applicable.

G. Warranty documents demonstrating compliance with the project's contract requirements.

1.04 SUBMITTALS – FOR CLOSEOUT

A. Section 01 77 00 - Closeout Procedures
1. The following information shall be submitted for record purposes:
2. Final (as-built) drawings and information for items listed in Section 1.5
3. Wiring diagrams
4. Certified production test reports
5. Installation information
6. Seismic certification and equipment anchorage details

B. Submit ten (10) copies of the above information.

1.05 QUALITY ASSURANCE

A. Manufacturer Qualifications: The equipment supplier shall maintain a service center capable of providing training, parts, maintenance and emergency repairs to equipment, including transfer switch generator sets and remote monitoring equipment (if applicable) at the site within a response period of less than (eight hours or appropriate time period designated for Project) from time of notification.
1. The transfer switch shall be serviced by technicians employed by, and specially trained and certified by the transfer switch supplier. The supplier shall maintain an inventory of critical replacement parts at the local service organization, and in service vehicles. The service organization shall be on call 24 hours per day, 365 days per year.
2. Submit names, experience level, training certifications, and locations for technicians that will be responsible for servicing equipment at this site.
3. The manufacturer shall maintain model and serial number records of each transfer switch provided for at least 20 years.

B. Electrical Components, Devices, and Accessories: Listed and labeled as defined in NFPA 70, Article 100, by a testing agency acceptable to authorities having jurisdiction, and marked as suitable for use in emergency, legally required or optional standby use as appropriate for the connected load.

C. The manufacturer shall warrant the material and workmanship of the transfer switch equipment for a minimum of one (1) year from registered commissioning and start-up, or eighteen (18) months from date of shipment.

D. The warranty shall be comprehensive. No deductibles shall be allowed for travel time, service hours, repair parts cost, and etc. during the minimum noted warranty period described above.

1.06 PROJECT CONDITIONS

A. Interruption of Existing Electrical Service: Do not interrupt electrical service to facilities occupied by Owner or others unless permitted under the following conditions and then only after arranging to provide temporary electrical service:
   1. Notify (Architect/Construction Manager/Owner) no fewer than four days in advance of proposed interruption of electrical service.
   2. Do not proceed with interruption of electrical service without Owner's written permission.
   3. Do not energize any new service or distribution equipment without notification and permission of the Construction Manager and Owner.

1.07 COORDINATION

A. Size and location of concrete bases and anchor bolt inserts shall be coordinated. Concrete, reinforcement and formwork must meet the requirements specified on Structural plans.

B. Install in switchboard, see Section 26 24 13.

1.08 ACCEPTABLE MANUFACTURERS

A. Automatic delayed transition transfer switch shall be ASCO 7000 Series, no substitutions, owner furnished, installed by contractor.

PART 2 PRODUCTS

2.01 MECHANICALLY HELD TRANSFER SWITCH

A. The transfer switch unit shall be electrically operated and mechanically held. The electrical operator shall be a solenoid mechanism, momentarily energized. The transfer switch unit shall include both electrical and mechanical interlocks to prevent both sets of main contacts from being closed at the same time. Main operators which include overcurrent disconnect devices or do not include electrical and mechanical interlocks will not be accepted.

B. All transfer switch sizes shall use only one type of main operator for ease of maintenance and commonality of parts.

C. The switch shall be positively locked and unaffected by momentary outages, so that contact pressure is maintained at a constant value and contact temperature rise is minimized for maximum reliability and operating life.

D. All main contacts shall be silver composition. Switches rated 800 amperes and above shall have segmented, blow-on construction for high withstand and close-on capability and be protected by separate arcing contacts.

E. Inspection of all contacts shall be possible from the front of the switch without disassembly of operating linkages and without disconnection of power conductors. Switches rated 800 amps and higher shall have front removable and replaceable contacts. All stationary and moveable contacts shall be replaceable without removing power conductors and/or bus bars.

F. Designs utilizing components of molded-case circuit breakers, contactors, or parts thereof, which are not intended for continuous duty, repetitive switching or transfer between two active power sources are not acceptable.

G. Where neutral conductors are to be solidly connected as shown on the plans, a neutral conductor plate with fully rated AL-CU pressure connectors shall be provided.

H. Where neutral conductors are to be switched, please consult ASCO.

2.02 MICROPROCESSOR CONTROLLER

A. The controller's sensing and logic shall be provided by a single built-in microprocessor for maximum reliability, minimum maintenance, and the ability to communicate serially through an optional serial communication module.

B. A single controller shall provide twelve selectable nominal voltages for maximum application flexibility and minimal spare part requirements. Voltage sensing shall be true RMS type and shall be accurate to ± 1% of nominal voltage. Frequency sensing shall be accurate to ± 0.2%. The panel shall be capable of operating over a temperature range of -20 to +60 degrees C and storage from -55 to +85 degrees C.

C. The controller shall be connected to the transfer switch by an interconnecting wiring harness. The harness shall include a keyed disconnect plug to enable the controller to be disconnected from the transfer switch for routine maintenance. Sensing and control logic shall be provided on multi-layer printed circuit boards. Interfacing relays shall be industrial grade plug-in type with dust covers. The panel shall be enclosed with a protective cover and be mounted separately from the transfer switch unit for safety and ease of maintenance. The protective cover shall include a built-in pocket for storage of the operator's manuals.

D. All customer connections shall be wired to a common terminal block to simplify field-wiring connections.

E. The controller shall meet or exceed the requirements for Electromagnetic Compatibility (EMC) as follows:

a.	EN 55011	Emission standard - Group 1, Class A
b.	EN 50082-2	Generic immunity standard, from which:
1)	EN 61000-4-2	Electrostatic discharge (ESD) immunity
2)	ENV 50140	Radiated Electro-Magnetic field immunity
3)	EN 61000-4-4	Electrical fast transient (EFT) immunity
4)	EN 61000-4-5:	Surge transient immunity
5)	EN 61000-4-6	Conducted Radio-Frequency field immunity

2.03 ENCLOSURE

1. The ADTS shall be installed in the main switchboard as shown on the plans.
2. All standard and optional door-mounted switches and pilot lights shall be 16-mm industrial grade type or equivalent for easy viewing & replacement. Door controls shall be provided on a separate removable plate, which can be supplied loose for open type units.
3. NEMA 3R transfer switch enclosures shall have a dead-front door. All door-mounted switches, pilot lights, and LCD shall be on a separate inner-door.
4. Color of enclosure shall be per Owner preference.

PART 3 OPERATION

3.01 CONTROLLER DISPLAY AND KEYPAD

1. A four line, 20 character LCD display and keypad shall be an integral part of the controller for viewing all available data and setting desired operational parameters. Operational parameters shall also be available for viewing and limited control through the serial communications input port. The following parameters shall only be adjustable via DIP switches on the controller:
   a. Nominal line voltage and frequency
   b. Single or three phase sensing
   c. Operating parameter protection
   d. Transfer operating mode configuration
      1) Open transition, Closed transition, or Delayed transition
   e. All instructions and controller settings shall be easily accessible, readable and accomplished without the use of codes, calculations, or instruction manuals.

3.02 VOLTAGE, FREQUENCY AND PHASE ROTATION SENSING

A. Voltage and frequency on both the normal and emergency sources (as noted below) shall be continuously monitored, with the following pickup, dropout, and trip setting capabilities (values shown as % of nominal unless otherwise specified):

Parameter	Sources	Dropout / Trip	Pickup / Reset
Undervoltage	N&E,3Ø	70 to 98%	85 to 100%
Overvoltage	N&E,3Ø	102 to 115%	2% below trip
Underfrequency	N&E	85 to 98%	90 to 100%
Overfrequency	N&E	102 to 110%	2% below trip
Voltage unbalance	N&E	5 to 20%	1% below dropout

B. Repetitive accuracy of all settings shall be within ± 0.5% over an operating temperature range of -20°C to 60°C.

C. Voltage and frequency settings shall be field adjustable in 1% increments either locally with the display and keypad or remotely via serial communications port access.

D. The controller shall be capable (when activated by the keypad or through the serial port) of sensing the phase rotation of both the normal and emergency sources. The source shall be considered unacceptable if the phase rotation is not the preferred rotation selected (ABC or CBA).

E. Source status screens shall be provided for both normal & emergency to provide digital readout of voltage on all 3 phases, frequency, and phase rotation.

F. The controller shall include a user selectable algorithm to prevent repeated transfer cycling to a source on an installation which experiences primary side, single phase failures on a Grounded Wye – Grounded Wye transformer which regenerates voltage when unloaded. The algorithm shall also inhibit retransfer to the normal (utility) source upon detection of a single phasing condition until a dedicated timer expires, the alternate source fails, or the normal source fails completely and is restored during this time delay period. The time delays associated with this feature shall be adjustable by the user through the controller keypad and LCD.

3.03 TIME DELAYS

A. An adjustable time delay of 0 to 6 seconds shall be provided to override momentary normal source outages and delay all transfer and engine starting signals. Capability shall be provided to extend this time delay to 60 minutes by providing an external 24 VDC power supply.

B. A time delay shall be provided on transfer to emergency, adjustable from 0 to 60 minutes, for controlled timing of transfer of loads to emergency.

C. An adjustable time delay of 0 to 6 seconds to override momentary emergency source outage to delay all retransfer signals during initial loading of engine generator set.

D. Two time delay modes (which are independently adjustable) shall be provided on re-transfer to normal. One time delay shall be for actual normal power failures and the other for the test mode function. The time delays shall be adjustable from 0 to 60 minutes. Time delay shall be automatically bypassed if the emergency source fails and the normal source is acceptable.

E. A time delay shall be provided on shut down of engine generator for cool down, adjustable from 0 to 60 minutes.

F. A time delay activated output signal shall also be provided to drive an external relay(s) for selective load disconnect control. The controller shall have the ability to activate an adjustable 0 to 5 minute time delay in any of the following modes:
   1. Prior to transfer only.
   2. Prior to and after transfer.
   3. Normal to emergency only.
   4. Emergency to normal only.
   5. Normal to emergency and emergency to normal.
   6. All transfer conditions or only when both sources are available.

G. The controller shall also include the following built-in time delay for Delayed Transition operation:
   1. 0 to 5 minute time delay for the load disconnect position for delayed transition operation.

H. All time delays shall be adjustable in 1 second increments, except the extended parallel time, which shall be adjustable in .01 second increments.

I. All time delays shall be adjustable by using the LCD display and keypad or with a remote device connected to the serial communications port. The time delay value displayed on the LCD or remote device shall be the remaining time until the next event occurs.

3.04 ADDITIONAL FEATURES

A. A three position momentary-type test switch shall be provided for the test / automatic / reset modes. The test position will simulate a normal source failure. The reset position shall bypass the time delays on either transfer to emergency or retransfer to normal. Switches which require utilizing the keypad and display function or have no manual time delay bypass means are not acceptable.

B. An SPDT contact, rated 5 amps at 30 VDC, shall be provided for a low-voltage engine start signal. The start signal shall prevent dry cranking of the engine by requiring the generator set to reach proper output, and run for the duration of the cool down setting, regardless of whether the normal source restores before the load is transferred.

C. Auxiliary contacts, rated 10 amps, 250 VAC shall be provided consisting of one contact, closed when the ADTS is connected to the normal source and one contact closed, when the ADTS is connected to the emergency source.

D. LED indicating lights (16 mm industrial grade, type 12) shall be provided; one to indicate when the ADTS is connected to the normal source (green) and one to indicate when the ADTS is connected to the emergency source (red).

E. LED indicating lights (16 mm industrial grade, type 12) shall be provided and energized by controller outputs. The lights shall provide true source availability of the normal and emergency sources, as determined by the voltage sensing trip and reset settings for each source.

F. Provide the ability to select “commit/no commit to transfer” to determine whether the load should be transferred to the emergency generator if the normal source restores before the generator is ready to accept the load.

G. An inphase monitor shall be provided in the controller. The monitor shall control transfer so that motor load inrush currents do not exceed normal starting currents, and shall not require external control of power sources. The inphase monitor shall be specifically designed for and be the product of the ATS manufacturer.

H. Engine Exerciser - The controller shall provide an internal engine exerciser. The engine exerciser shall allow the user to program up to seven different exercise routines. For each routine, the user shall be able to:
   1. Enable or disable the routine.
   2. Enable or disable transfer of the load during routine.
   3. Set the start time:
      a. time of day
      b. day of week
      c. week of month (1st, 2nd, 3rd, 4th, alternate or every)
   4. Set the duration of the run.
      a. At the end of the specified duration the switch shall transfer the load back to normal and run the generator for the specified cool down period. A 10-year life battery that supplies power to the real time clock in the event of a power loss will maintain all time and date information.

I. System Status - The controller LCD display shall include a “System Status” screen which shall be readily accessible from any point in the menu by depressing the “ESC” key a maximum of

two times. This screen shall display a clear description of the active operating sequence and switch position. For example:

1. Normal Failed
2. Load on Normal
3. TD Normal to Emergerncy
4. 2min15s
5. Controllers that require multiple screens to determine system status or display “coded” system status messages, which must be explained by references in the operator’s manual, are not permissible.

J. Self Diagnostics - The controller shall contain a diagnostic screen for the purpose of detecting system errors. This screen shall provide information on the status input signals to the controller which may be preventing load transfer commands from being completed.

K. Communications Interface – The controller shall be capable of interfacing, through an optional serial communication module, with a network of transfer switches, locally (up to 4000 ft.) or remotely through modem serial communications. Standard software specific for transfer switch applications shall be available by the transfer switch manufacturer. This software shall allow for the monitoring, control and setup of parameters.

L. Data Logging – The controller shall have the ability to log data and to maintain the last 99 events, even in the event of total power loss. The following events shall be time and date stamped and maintained in a non-volatile memory:

1. Event Logging
   a. Data and time and reason for transfer normal to emergency.
   b. Data and time and reason for transfer emergency to normal.
   c. Data and time and reason for engine start.
   d. Data and time engine stopped.
   e. Data and time emergency source available.
   f. Data and time emergency source not available.
2. Statistical Data
   a. Total number of transfers.
   b. Total number of transfers due to source failure.
   c. Total number of days controller is energized.
   d. Total number of hours both normal and emergency sources are available.

M. Communications Module – Communications Module - For remote interfacing of furnished transfer switch, shall allow the vendor’s monitoring products to monitor and control the transfer switch equipment with the utilization of 128 – Bit AES encryption standard. An embedded webpage shall be provided for switch status, metered values and list up to 99 events in the log. Modbus and Simple Network Management Protocol (SNMP) shall be supported for open monitoring of ASCO products. Hardware shall include:

1. 10/100Mbps Ethernet port with connector for RJ45
2. RS-485 port (2 wire or 4 wire)
3. 24 VDC input for optional remote power
4. DIN rail mountable
5. Onboard status LED’s shall be provided for the following:
   a. Receiving operational power
   b. Transmitting and receiving data
   c. Ethernet and network status
   d. Diagnostic analysis

N. External DC Power Supply – An optional provision shall be available to connect an external 24 VDC power supply to allow the LCD and the door mounted control indicators to remain functional when both power sources are dead.

O. The transfer switch shall include pre-transfer relay module that allows for controlled shutdown of motors and other electrical equipment prior to transfer of power.

PART 4 ADDITIONAL REQUIREMENTS

4.01 WITHSTAND AND CLOSING RATINGS

A. The ADTS shall be rated to close on and withstand the available RMS symmetrical short circuit current at the ADTS terminals with the type of overcurrent protection shown on the plans.

B. The ADTS shall be UL listed in accordance with UL 1008 and be labeled in accordance with that standard's 0.025 and 0.05 second time based ratings. ATSs which are not tested and labeled with time based ratings and have series, or specific breaker ratings only, are not acceptable.

4.02 TESTS AND CERTIFICATION

A. The complete ADTS shall be factory tested to ensure proper operation of the individual components and correct overall sequence of operation and to ensure that the operating transfer time, voltage, frequency and time delay settings are in compliance with the specification requirements.

B. Upon request, the manufacturer shall provide a notarized letter certifying compliance with all of the requirements of this specification including compliance with the above codes and standards, and withstand and closing ratings. The certification shall identify, by serial number(s), the equipment involved. No exceptions to the specifications, other than those stipulated at the time of the submittal, shall be included in the certification.

C. The ADTS manufacturer shall be certified to ISO 9001 International Quality Standard and the manufacturer shall have third party certification verifying quality assurance in design/development, production, installation and servicing in accordance with ISO 9001.

4.03 FIELD QUALITY CONTROL

A. Manufacturer's Field Service: The supplier of the transfer switch(es) and associated equipment shall inspect, test, and adjust components, assemblies, and equipment installations, including connections, and report results in writing.

B. Manufacturer’s representative shall perform tests and inspections and prepare test reports.

C. After installing equipment and after electrical circuitry has been energized, installer shall test for compliance with requirements.
   1. Perform recommended installation tests as recommended in manufacturer’s installation and service manuals.
   2. After energizing circuits, demonstrate interlocking sequence and operational function for each switch.
      a. Simulate power failures of normal source to automatic transfer switches and of emergency source with normal source available.
      b. Verify time-delay settings.
      c. Verify proper sequence and correct timing of automatic engine starting, transfer time delay, retransfer time delay on restoration of normal power, and engine cool-down and shutdown.

D. Infrared Scanning: After Substantial Completion, but not more than 60 days after Final Acceptance, perform an infrared scan of each switch. Remove all access panels so joints and connections are accessible to portable scanner.
   1. Follow-up Infrared Scanning: Perform an additional follow-up infrared scan of each switch 11 months after date of Substantial Completion.
   2. Instrument: Use an infrared scanning device designed to measure temperature or to detect significant deviations from normal values. Provide calibration record for device.
   3. Record of Infrared Scanning: Prepare a certified report that identifies switches checked and that describes scanning results. Include notation of deficiencies detected, remedial action taken, and observations after remedial action.

4.04 DEMONSTRATION

A. After generator set installation (if applicable), the generator and transfer switch supplier shall conduct a complete operation, basic maintenance, and emergency service seminar covering generator set and transfer switch equipment, for up to 10 people employed by the Owner.
   1. The seminar shall include instruction on operation of the transfer equipment, normal testing and exercise, adjustments to the control system, and emergency operation procedures.
   2. The class duration shall be at least 8 hours in length, and include practical operation with the installed equipment.

4.05 SERVICE REPRESENTATION

A. The ADTS manufacturer shall maintain a national service organization of company-employed personnel located throughout the contiguous United States. The service center's personnel must be factory trained and must be on call 24 hours a day, 365 days a year.

B. The manufacturer shall maintain records of each switch, by serial number, for a minimum of 20 years.

END OF SECTION

SECTION 264314
SURGE PROTECTIVE DEVICES

PART 1 - GENERAL

1.01 SUMMARY

A. Section includes:
   1. High-energy surge protective devices.

B. Related sections:
   1. Section 01 33 00 - Submittal Procedures.
   2. Section 26 05 00 - Common Work Results for Electrical.
   3. Section 26 08 50 - Field Electrical Acceptance Tests.

1.02 REFERENCES

A. As specified in Section 26 05 00.

B. Institute of Electrical and Electronics Engineers (IEEE):
   1. C62.41 – Recommended Practice on Surge Voltages in Low Voltage AC Power Circuits.
   2. C62.45 –Guide on Surge Testing for Equipment Connected to Low-Voltage (1000 V and Less) AC Power Circuits.
   3. C62.62- Standard Test Specifications for Surge Protective Devices for Low Voltage AC Power Circuits.

C. Underwriters Laboratory:
   1. 1449, 4th Edition, Standard for Surge Protective Devices.

1.03 DEFINITIONS

A. As specified in Section 26 05 00.

B. Specific definitions:
   1. SPD: Surge protective device.
   2. SAD: Silicon avalanche diode.
   3. MOV: Metal oxide varistor.
   4. MCOV: Maximum continuous operating voltage.
   5. In: Nominal discharge current.
   6. VPR: Voltage protection rating.
   7. SCCR: Short circuit current rating.

1.04 SYSTEM DESCRIPTION

A. Surge protective devices as an integral component of the electrical equipment or externally mounted as indicated on the Drawings.

1.05 SUBMITTALS

A. Furnish submittals as specified in Sections 01 33 00 and 26 05 00.

B. Product data:
   1. Furnish complete product data confirming detailed compliance or exception statements to all provisions of this Section.
   2. Manufacturer’s catalog cut sheets indicating:
      a. Manufacturer and model numbers.
      b. Ratings of each SPD including but not limited to:
         1) Short circuit current rating.
         2) Nominal discharge current.
         3) Maximum continuous operating voltage.
         4) Voltage protection rating.
         5) System voltage.
         6) System frequency.

7) Surge current capacity.

3. Submit independent test data from a nationally recognized testing laboratory verifying the following:
   a. Overcurrent protection.
   b. UL 1449.

C. Shop drawings:
   1. Provide electrical and mechanical drawings by the manufacturer that detail:
      a. Unit dimensions.
      b. Weights.
      c. Components.
      d. Field connection locations.
      e. Mounting provisions.
      f. Connection details.
      g. Wiring diagram.

D. Operation and maintenance manuals:
   1. Provide the manufacturer's manual with installation, start-up, spare parts lists, and operating instructions for the specified system.

1.06 QUALITY ASSURANCE

A. As specified in Section 26 05 00.

B. Provide SPD units that are designed, manufactured, tested and installed in compliance with the following codes and standards:
   1. Institute of Electrical and Electronics Engineers (IEEE C62.41, C62.45, C62.62).
   2. Federal Information Processing Standards Publication 94 (FIBS PUB 94).
   3. National Electrical Manufacturer Association.
   4. National Fire Protection Association (NFPA 20, 75 and 780).
   5. National Electric Code (NFPA 70).
   6. Underwriters Laboratories (UL 1449 4th Edition and UL 1283).
   7. International Electrotechnical Commission (IEC 801).

1.07 DELIVERY, STORAGE, AND HANDLING

A. As specified in Section 26 05 00.

1.08 PROJECT OR SITE CONDITIONS

A. As specified in Section 26 05 00.

1.09 SEQUENCING

A. Coordinate with and provide SPD equipment to the electrical equipment manufacturer before final assembly and factory testing.

1.10 SCHEDULING (NOT USED)

1.11 WARRANTY

A. As specified in Section 26 05 00.

B. Extended warranty:
   1. Furnish a manufacturer's full 5-year parts and labor warranty from date of shipment against any part failure when installed in compliance with manufacturer's written instructions, UL listing requirements, and any applicable national, state, or local electrical codes.
   2. Warranty shall include:
      a. Direct, factory trained employees must be available within 48 hours for assessment of the problem.
      b. A 24-hour toll-free 800-number for warranty support.

1.12 SYSTEM START-UP

A. As specified in Section 26 05 00.

1.13 OWNER'S INSTRUCTIONS (NOT USED)

1.14 MAINTENANCE (NOT USED)

PART 2 - PRODUCTS

2.01 MANUFACTURERS

A. One of the following or equal:
   1. Schneider Electric/Square D

2.02 EXISTING PRODUCTS (NOT USED)

2.03 MATERIALS (NOT USED)

2.04 MANUFACTURED UNITS

A. Provide Type 1 or Type 2 SPD units as required for the locations indicated on the Drawings.

B. Electrical requirements:
   1. SPD ratings are to be consistent with the nominal system operating voltage, phase, and configuration as indicated on the Drawings.
   2. MCOV:
      a. For the SPD and all components in the suppression path (including all MOVs, SADs, and selenium cells): Greater than 115 percent of the nominal system operating voltage.
   3. Operating frequency:
      a. 47 to 63 hertz.
   4. SCCR:
      a. 65 kAIC minimum, but not less than the equipment it is connected to as indicated on the Drawings.
      b. The SCCR shall be marked on the SPD in accordance with UL 1449 and the NEC.
   5. Nominal discharge current In:
      a. 20 kA.
   6. Maximum VPR:

	Modes	240/120	208Y/120	480Y/277
b.	L-N, L-G, N-G	900	900	1,500
c.	L-L	1,200	1,200	2,000

   7. Peak surge current:
      a. Service entrance locations:
         1) 240 kA per phase minimum.
         2) 120 kA per mode minimum.
      b. Branch locations:
         1) 120 kA per phase, minimum.
         2) 60 kA per mode minimum.

C. Protection modes:
   1. Provide SPD protection modes as follows:
      a. Line to Neutral (L-N) where applicable.
      b. Line to Ground (L-G).
      c. Neutral to Ground (N-G), where applicable.

D. Environmental requirements:
   1. Storage temperature:
      a. -40 degrees to +50 degrees Celsius.
   2. Operating temperature:
      a. -0 degrees to +60 Celsius.
   3. Relative humidity:

a. 5 percent to 95 percent.
4. Audible noise:
a. Less than 45 dBa at 5 feet (1.5 m).
5. Operating altitude:
a. Zero to 12,000 feet above sea level.

E. Provide surge protective devices that are suitable for application in IEEE C62.41 Category A, B and C3 environments, as tested to IEEE C62.45.

2.05 EQUIPMENT (NOT USED)

2.06 COMPONENTS

A. Enclosure:
1. Located in electrical equipment or in an external NEMA 12 enclosure as indicated on the Drawings.
a. NEMA Type 12 enclosure:
1) No ventilation openings.
b. Hinged cover requiring a tool for internal access.
c. Internal drawing pocket.
d. All monitoring indications must be visible without opening the door.

B. Internal connections:
1. Provide low impedance copper plates for intra-unit connections:
a. Attach surge modules using bolted connections to the plates for low impedance connections.
2. Size all connections, conductors, and terminals for the specified surge current capacity.

C. Surge diversion modules:
1. MOV:
a. Where multiple MOVs are used in parallel, utilize computer matched MOVs to within 1 volt variance and tested for manufacturer's defects.

D. Overcurrent protection:
1. Individually fuse all components, including suppression, filtering, and monitoring components:
a. Rated to allow maximum specified nominal discharge current capacity.
b. Overcurrent protection that limits specified surge currents is not acceptable.

E. Connections:
1. Provide terminals to accommodate wire sizes up to #2 AWG.

2.07 ACCESSORIES

A. Unit status indicators:
1. Provide red and green solid-state indicators, with printed labels, on the front cover to redundantly indicate on-line unit status:
a. The absence of the green light and the presence of the red light indicate that surge protection is reduced and service is needed to restore full operation.
b. Indicates the status of protection on each mode or phase.

B. Dry contacts for remote monitoring:
1. Electrically isolated Form C dry contacts (1 A/125 VAC) for remote monitoring of system integrity, and indication of under voltage, phase and/or power loss.

C. Provide transient counter to count transient voltage surges:
1. LCD readout located on the unit’s front cover.
2. Counter to utilize batteries with a 10-year nominal life or non-volitile memory to maintain accurate counts in the event of power loss.

2.08 MIXES (NOT USED)

2.09 FABRICATION (NOT USED)

2.10 FINISHES (NOT USED)

2.11 SOURCE QUALITY CONTROL

A. Permanently affix surge rating to the SPD.

B. Perform manufacturer's standard factory test.
   1. Perform testing in accordance with UL 1449.

PART 3 - EXECUTION

3.01 EXAMINATION (NOT USED)

3.02 PREPARATION (NOT USED)

3.03 INSTALLATION

A. As specified in Section 26 05 00.

B. Follow the manufacturer's recommended installation practices and comply with all applicable codes.

C. Special techniques:
   1. Install the SPD with as short and straight conductors including ground conductor as practically possible:
      a. Twist the input conductors together to reduce input conductor inductance.
   2. Do not subject SPD to insulation resistance testing.

3.04 ERECTION, INSTALLATION, APPLICATION, CONSTRUCTION (NOT USED)

3.05 REPAIR/RESTORATION (NOT USED)

3.06 RE-INSTALLATION (NOT USED)

3.07 FIELD QUALITY CONTROL

A. As specified in Section 26 08 50.

3.08 ADJUSTING (NOT USED)

3.09 CLEANING (NOT USED)

3.10 PROTECTION

A. As specified in Section 26 05 00.

3.11 SCHEDULES (NOT USED)

END OF SECTION

SECTION 260145 - LIGHTING CONTROL DEVICES

PART 1 - GENERAL

1.01 RELATED DOCUMENTS

A. Drawings and general provisions of the Contract, including General and Supplementary Conditions and Division 01 Specification Sections, apply to this Section.

1.02 SUMMARY

A. This Section includes the following lighting control devices:

1. Occupancy sensors.

1.03 DEFINITIONS

A. LED: Light-emitting diode.

B. PIR: Passive infrared.

1.04 SUBMITTALS

A. Product Data: For each type of product indicated.

B. Shop Drawings: Show installation details for light-level sensors.

1. Interconnection diagrams showing field-installed wiring.

C. Field quality-control test reports.

D. Operation and Maintenance Data: For each type of product to include in operation, and maintenance manuals.

1.05 QUALITY ASSURANCE

A. Electrical Components, Devices, and Accessories: Listed and labeled as defined in NFPA 70, Article 100, by a testing agency acceptable to authorities having jurisdiction, and marked for intended use.

PART 2 - PRODUCTS

2.01 OCCUPANCY SENSORS

A. Available Manufacturers: Subject to compliance with requirements, manufacturers offering products that may be incorporated into the Work include, but are not limited to, the following:

B. Manufacturers: Subject to compliance with requirements, provide products by one of the following:

C. Basis-of-Design Product: Subject to compliance with requirements, provide the product indicated on Drawings or a comparable product by one of the following:

1. Acuity Brands.

PART 3 - EXECUTION

3.01 WIRING INSTALLATION

A. Wiring Method: Comply with Division 26 Section "Conductors." Minimum conduit size shall be 1/2 inch.

B. Wiring within Enclosures: Comply with NECA 1. Separate power-limited and non-power-limited conductors according to conductor manufacturer's written instructions.

C. Size conductors according to lighting control device manufacturer's written instructions, unless otherwise indicated.

3.02 IDENTIFICATION

A. Identify components and power and control wiring according to Division 26 Section "Tests and Identification."

1. Identify circuits or luminaries controlled by photoelectric and occupancy sensors at each sensor.

B. Label occupancy sensors with a unique designation.

3.03 FIELD QUALITY CONTROL

A. Perform the following field tests and inspections and prepare test reports:

1. After installing occupancy sensors, and after electrical circuitry has been energized, adjust and test for compliance with requirements.
2. Operational Test: Verify operation of each lighting control device, and adjust time delays.

B. Lighting control devices that fail tests and inspections are defective work.

3.04 ADJUSTING

A. Occupancy Adjustments: When requested within 12 months of date of Substantial Completion, provide on-site assistance in adjusting sensors to suit occupied conditions. Provide up to two visits to Project during other-than-normal occupancy hours for this purpose.

3.05 DEMONSTRATION

A. Coordinate demonstration of products specified in this Section with demonstration requirements for low-voltage, programmable lighting control system specified in contract documents.

B. Engage a factory-authorized service representative to train Owner's maintenance personnel to adjust, operate, and maintain lighting control devices.

END OF SECTION 260145

CTION 265613 - LIGHTING POLES AND STANDARDS

PART 4 - GENERAL

4.1 RELATED DOCUMENTS

A. Drawings and general provisions of the Contract, including General and Supplementary Conditions and Division 01 Specification Sections, apply to this Section.

4.2 SUMMARY

A. Section Includes:

1. Poles and accessories for support of luminaires.

4.3 DEFINITIONS

A. EPA: Equivalent projected area.

B. Luminaire: Complete luminaire.

4.4 ACTION SUBMITTALS

A. Product Data: For each pole, accessory, and luminaire-supporting and -lowering device, arranged as indicated.

1. Include data on construction details, profiles, EPA, cable entrances, materials, dimensions, weight, rated design load, and ultimate strength of individual components.
2. Include finishes for lighting poles and luminaire-supporting devices.
3. Anchor bolts.
4. Manufactured pole foundations.

B. Shop Drawings:

1. Include details of equipment assemblies. Indicate dimensions, weights, loads, required clearances, method of field assembly, components, and location and size of each field connection.
2. Detail assembly of poles and pole accessories.
3. Anchor bolt templates keyed to specific poles and certified by manufacturer.
4. Method and procedure of pole installation. Include manufacturer's written installations.

4.5 CLOSEOUT SUBMITTALS

A. Operation and Maintenance Data: For poles to include in emergency, operation, and maintenance manuals.

1. In addition to items specified in other sections, include pole inspection and repair procedures.

4.6 MAINTENANCE MATERIAL SUBMITTALS

A. Pole repair materials.

4.7 DELIVERY, STORAGE, AND HANDLING

A. Package aluminum poles for shipping according to ASTM B660.

B. Store poles on decay-resistant skids at least 12 inches (300 mm) above grade and vegetation. Support poles to prevent distortion and arrange to provide free air circulation.

C. Retain factory-applied pole wrappings on fiberglass and laminated wood poles until right before pole installation. Handle poles with web fabric straps.

D. Retain factory-applied pole wrappings on metal poles until right before pole installation. Handle poles with web fabric straps.

4.8 WARRANTY

A. Special Warranty: Manufacturer agrees to repair or replace components of pole(s) that fail in materials or workmanship; that corrode; or that fade, stain, perforate, erode, or chalk due to effects of weather or solar radiation within a specified warranty period.

1. Warranty Period: Five years from date of Substantial Completion.
2. Warranty Period for Corrosion Resistance: Five years from date of Substantial Completion.
3. Warranty Period for Color Retention: Five years from date of Substantial Completion.

PART 5 - PRODUCTS

5.1 PERFORMANCE REQUIREMENTS

A. Wind Load: Pressure of wind on pole and luminaire, calculated and applied according to AASHTO LTS-6-M.

1. Basic wind speed for calculating wind load for poles 50 feet (15 m) high or less is 100 mph (45 m/s).

a. Wind Importance Factor: 1.0.
b. Minimum Design Life: 25 years.
c. Velocity Conversion Factor: 1.0.

B. Strength Analysis: For each pole, multiply the actual EPA of luminaires and brackets by a factor of 1.1 to obtain the EPA to be used in pole selection strength analysis.

C. Luminaire Attachment Provisions: Comply with luminaire manufacturers' mounting requirements. Use stainless-steel fasteners and mounting bolts unless otherwise indicated.

5.2 STEEL POLES

A. Source Limitations: Obtain poles from single manufacturer or producer.

B. Source Limitations: For poles, obtain each color, grade, finish, type, and variety of pole from single source with resources to provide products of consistent quality in appearance and physical properties.

C. Poles: Comply with ASTM A500/A500M, Grade B carbon steel with a minimum yield of 46,000 psig (317 MPa); one-piece construction up to 40 feet (12 m) in height with access handhole in pole wall.

1. Shape: Round, straight.
2. Mounting Provisions: Butt flange for bolted mounting on foundation or breakaway support.

D. Brackets for Luminaires: Detachable, cantilever, without underbrace.

1. Adaptor fitting welded to pole, allowing the bracket to be bolted to the pole-mounted adapter, then bolted together with stainless-steel bolts.
2. Cross Section: Tapered oval, with straight tubular end section to accommodate luminaire. Match pole material and finish.

E. Pole-Top Tenons: Fabricated to support luminaire or luminaires and brackets indicated, and securely fastened to pole top.

F. Fasteners: Stainless steel, size and type as determined by manufacturer. Corrosion-resistant items compatible with support components.

1. Materials: Compatible with poles and standards as well as the substrates to which poles and standards are fastened and shall not cause galvanic action at contact points.
2. Anchor Bolts, Leveling Nuts, Bolt Caps, and Washers: Hot-dip galvanized after fabrication unless otherwise indicated.

G. Grounding and Bonding Lugs: Welded 1/2-inch (13-mm) threaded lug, complying with requirements in Section 260526 "Grounding and Bonding for Electrical Systems," listed for attaching grounding and bonding conductors of type and size indicated, and accessible through handhole.

H. Handhole: Oval shaped, with minimum clear opening of 2-1/2 by 5 inches (65 by 130 mm), with cover secured by tamper-resistant stainless-steel captive screws.

I. Cable Support Grip: Wire-mesh type with rotating attachment eye, sized for diameter of cable and rated for a minimum load equal to weight of supported load multiplied by a 5.0 safety factor.

J. Factory-Painted Finish: Comply with NAAMM's "Metal Finishes Manual for Architectural and Metal Products" recommendations for applying and designating finishes.

1. Surface Preparation: Clean surfaces according to SSPC-SP 1 to remove dirt, oil, grease, and other contaminants that could impair paint bond. Grind welds and polish surfaces to a smooth, even finish. Remove mill scale and rust, if present, from uncoated steel, according to SSPC-SP 5/NACE No. 1 or SSPC-SP 8.
2. Interior Surfaces of Pole: One coat of bituminous paint, or otherwise treat for equal corrosion protection.
3. Exterior Surfaces: Manufacturer's standard finish consisting of one or more coats of primer and two finish coats of high gloss, high-build polyurethane enamel.

a. Color: As selected by Architect from manufacturer's full range.

K. Powder-Coat Finish: Comply with NAAMM's "Metal Finishes Manual for Architectural and Metal Products" recommendations for applying and designating finishes.

1. Surface Preparation: Clean surfaces according to SSPC-SP 1 to remove dirt, oil, grease, and other contaminants that could impair powder coat bond. Grind welds and polish surfaces to a smooth, even finish. Remove mill scale and rust, if present, from uncoated steel, according to SSPC-SP 5/NACE No. 1 or SSPC-SP 8.
2. Powder Coat: Comply with AAMA 2604.

a. Electrostatic-applied powder coating; single application and cured to a minimum 2.5- to 3.5-mils (64- to 89-um) dry film thickness. Coat interior and exterior of pole for equal corrosion protection.
b. Color: As selected by Architect from manufacturer's full range.

5.3 POLE ACCESSORIES

A. Base Covers: Manufacturers' standard metal units, finished same as pole, and arranged to cover pole's mounting bolts and nuts.

5.4 MOUNTING HARDWARE

A. Anchor Bolts: Manufactured to ASTM F1554, Grade 55, with a minimum yield strength of 55,000 psi (380 000 kPa).

1. Galvanizing: Hot dip galvanized according to ASTM A153, Class C.

B. Nuts: ASTM A563, Grade A, Heavy-Hex.

1. Galvanizing: Hot dip galvanized according to ASTM A153, Class C
2. Two nuts provided per anchor bolt.

C. Washers: ASTM F436, Type 1.

1. Galvanizing: Hot dip galvanized according to ASTM A153, Class C.
2. Two washer(s) provided per anchor bolt.

5.5 GENERAL FINISH REQUIREMENTS

A. Protect mechanical finishes on exposed surfaces from damage by applying a strippable, temporary protective covering before shipping.

B. Appearance of Finished Work: Noticeable variations in same piece are unacceptable. Variations in appearance of adjoining components are acceptable if they are within the range of approved Samples and are assembled or installed to minimize contrast.

PART 6 - EXECUTION

6.1 EXAMINATION

A. Examine areas and conditions, with Installer present, for compliance with requirements for installation tolerances and other conditions affecting performance of the Work.

B. Examine poles, luminaire-mounting devices, lowering devices, and pole accessories before installation. Components that are scratched, dented, marred, wet, moisture damaged, or visibly damaged are considered defective.

C. Examine roughing-in for foundation and conduit to verify actual locations of installation.

D. Proceed with installation only after unsatisfactory conditions have been corrected.

6.2 POLE FOUNDATION

A. Concrete Pole Foundations: Cast in place, with anchor bolts to match pole-base flange. Structural steel complying with ASTM A36/A36M and hot-dip galvanized according to ASTM A123/A123M; and with top-plate and mounting bolts to match pole-base flange and strength required to support pole, luminaire, and accessories.

B. Anchor Bolts: Install plumb using manufacturer-supplied plywood template, uniformly spaced.

6.3 POLE INSTALLATION

A. Alignment: Align pole foundations and poles for optimum directional alignment of luminaires and their mounting provisions on pole.

B. Clearances: Maintain the following minimum horizontal distances of poles from surface and underground features unless otherwise indicated on drawing.

1. Fire Hydrants and Water Piping: 60 inches (1520 mm).
2. Water, Gas, Electric, Communications, and Sewer Lines: 5 feet.
3. Trees: 15 feet (5 m) from tree trunk.

C. Foundation-Mounted Poles: Mount pole with leveling nuts and tighten top nuts to torque level according to pole manufacturer's written instructions.

1. Use anchor bolts and nuts selected to resist seismic forces defined for the application and approved by manufacturer.
2. Grout void between pole base and foundation. Use nonshrink or expanding concrete grout firmly packed to fill space.
3. Install base covers unless otherwise indicated.
4. Use a short piece of 1/2 -inch (13-mm) diameter pipe to make a drain hole through grout. Arrange to drain condensation from interior of pole.

D. Raise and set pole using web fabric slings (not chain or cable) at locations indicated by manufacturer.

6.4 CORROSION PREVENTION

A. Aluminum: Do not use in contact with earth or concrete. When in direct contact with a dissimilar metal, protect aluminum using insulating fittings or treatment.

6.5 GROUNDING

A. Ground Metal Poles and Support Structures: Per CEC.

1. Install grounding electrode for each pole unless otherwise indicated.
2. Install grounding conductor pigtail in the base for connecting luminaire to grounding system.

6.6 IDENTIFICATION

A. Identify system components, wiring, cabling, and terminals.

6.7 FIELD QUALITY CONTROL

A. Special Inspections: Owner will engage a qualified IOR inspector to perform the following special inspections:

1. Inspect poles for nicks, mars, dents, scratches, and other damage.
2. System function tests.

END OF SECTION 265613

SECTION 265619 - LED EXTERIOR LIGHTING

PART 7 - GENERAL

7.1 RELATED DOCUMENTS

A. Drawings and general provisions of the Contract, including General and Supplementary Conditions and Division 01 Specification Sections, apply to this Section.

7.2 SUMMARY

A. Section Includes:

1. Luminaire-mounted photoelectric relays.
2. Luminaire types.
3. Materials.
4. Finishes.
5. Luminaire support components.

B. Related Requirements:

1. Section 265613 "Lighting Poles and Standards" for poles and standards used to support exterior lighting equipment.

7.3 DEFINITIONS

A. CCT: Correlated color temperature.

B. CRI: Color rendering index.

C. Fixture: See "Luminaire."

D. IP: International Protection or Ingress Protection Rating.

E. Lumen: Measured output of lamp and luminaire, or both.

F. Luminaire: Complete lighting unit, including lamp, reflector, and housing.

7.4 ACTION SUBMITTALS

A. Product Data: For each type of luminaire.

1. Arrange in order of luminaire designation.
2. Include data on features, accessories, and finishes.
3. Include physical description and dimensions of luminaire.
4. Lamps, include life, output (lumens, CCT, and CRI), and energy-efficiency data.

5. Wiring diagrams for power, control, and signal wiring.
6. Photoelectric relays.
7. Means of attaching luminaires to supports and indication that the attachment is suitable for components involved.

7.5 INFORMATIONAL SUBMITTALS

A. Coordination Drawings: Plans, drawn to scale, on which the following items are shown and coordinated with each other, using input from installers of the items involved:

1. Luminaires.
2. Underground utilities and structures.
3. Existing underground utilities and structures.
4. Above-grade utilities and structures.
5. Building features.

B. Product Certificates: For each type of the following:

1. Luminaire.
2. Photoelectric relay.

C. Product Test Reports: For each luminaire, for tests performed by manufacturer.

D. Source quality-control reports.

E. Sample warranty.

7.6 CLOSEOUT SUBMITTALS

A. Operation and Maintenance Data: For luminaires and photoelectric relays to include in operation and maintenance manuals.

1. Provide a list of all lamp types used on Project. Use ANSI and manufacturers' codes.
2. Provide a list of all photoelectric relay types used on Project; use manufacturers' codes.

7.7 MAINTENANCE MATERIAL SUBMITTALS

A. Furnish extra materials that match products installed and that are packaged with protective covering for storage and identified with labels describing contents.

1. Lamps: Ten for every 100 of each type and rating installed. Furnish at least one of each type.
2. Glass, Acrylic, and Plastic Lenses, Covers, and Other Optical Parts: One for every 100 of each type and rating installed. Furnish at least one of each type.
3. Diffusers and Lenses: One for every 100 of each type and rating installed. Furnish at least one of each type.
4. Globes and Guards: One for every 20 of each type and rating installed. Furnish at least one of each type.

7.8 QUALITY ASSURANCE

A. Provide luminaires from a single manufacturer for each luminaire type.

7.9 DELIVERY, STORAGE, AND HANDLING

A. Protect finishes of exposed surfaces by applying a strippable, temporary protective covering prior to shipping.

7.10 FIELD CONDITIONS

A. Verify existing and proposed utility structures prior to the start of work associated with luminaire installation.

B. Mark locations of exterior luminaires for approval by Architect prior to the start of luminaire installation.

7.11 WARRANTY

A. Warranty: Manufacturer and Installer agree to repair or replace components of luminaires that fail in materials or workmanship within specified warranty period.

1. Failures include, but are not limited to, the following:

a. Structural failures, including luminaire support components.
b. Faulty operation of luminaires and accessories.
c. Deterioration of metals, metal finishes, and other materials beyond normal weathering.

PART 8 - PRODUCTS

8.1 LUMINAIRE REQUIREMENTS

A. Electrical Components, Devices, and Accessories: Listed and labeled as defined in NFPA 70, by a qualified testing agency, and marked for intended location and application.

B. UL Compliance: Comply with UL 1598 and listed for wet location.

C. Lamp base complying with ANSI C81.61.

D. Bulb shape complying with ANSI C79.1.

E. CRI of minimum 90.

F. L70 lamp life of 50,000 hours.

G. Lamps dimmable from 100 percent to 0 percent of maximum light output.

H. Internal driver.

I. Source Limitations:

1. Obtain luminaires from single source from a single manufacturer.
2. For luminaires, obtain each color, grade, finish, type, and variety of luminaire from single source with resources to provide products of consistent quality in appearance and physical properties.

8.2 MATERIALS

A. Metal Parts: Free of burrs and sharp corners and edges.

B. Doors, Frames, and Other Internal Access: Smooth operating, free of light leakage under operating conditions, and designed to permit relamping without use of tools. Designed to prevent doors, frames, lenses, diffusers, and other components from falling accidentally during relamping and when secured in operating position. Doors shall be removable for cleaning or replacing lenses.

C. Diffusers and Globes:

1. Acrylic Diffusers: 100 percent virgin acrylic plastic, with high resistance to yellowing and other changes due to aging, exposure to heat, and UV radiation.

D. Lens and Refractor Gaskets: Use heat- and aging-resistant resilient gaskets to seal and cushion lenses and refractors in luminaire doors.

E. Reflecting surfaces shall have minimum reflectance as follows unless otherwise indicated:

1. White Surfaces: 85 percent.
2. Specular Surfaces: 83 percent.
3. Diffusing Specular Surfaces: 75 percent.

F. Housings:

1. Rigidly formed, weather- and light-tight enclosure that will not warp, sag, or deform in use.
2. Provide filter/breather for enclosed luminaires.

8.3 FINISHES

A. Variations in Finishes: Noticeable variations in same piece are unacceptable. Variations in appearance of adjoining components are acceptable if they are within the range of approved Samples and are assembled or installed to minimize contrast.

B. Luminaire Finish: Manufacturer's standard paint applied to factory-assembled and -tested luminaire before shipping. Where indicated, match finish process and color of pole or support materials.

PART 9 - EXECUTION

9.1 EXAMINATION

A. Examine substrates, areas, and conditions, with Installer present, for compliance with requirements for installation tolerances and other conditions affecting performance of the Work.

B. Examine roughing-in for luminaire electrical conduit to verify actual locations of conduit connections before luminaire installation.

C. Proceed with installation only after unsatisfactory conditions have been corrected.

9.2 GENERAL INSTALLATION REQUIREMENTS

A. Comply with NECA 1.

B. Use fastening methods and materials selected to resist seismic forces defined for the application and approved by manufacturer.

C. Install lamps in each luminaire.

D. Fasten luminaire to structural support.

E. Supports:

1. Sized and rated for luminaire weight.
2. Able to maintain luminaire position after cleaning and relamping.
3. Support luminaires without causing deflection of finished surface.
4. Luminaire-mounting devices shall be capable of supporting a horizontal force of 100 percent of luminaire weight and a vertical force of 400 percent of luminaire weight.

F. Wiring Method: Install cables in raceways. Conceal raceways and cables.

G. Install luminaires level, plumb, and square with finished grade unless otherwise indicated. Install luminaires at height and aiming angle as indicated on Drawings.

H. Coordinate layout and installation of luminaires with other construction.

I. Adjust luminaires that require field adjustment or aiming. Include adjustment of photoelectric device to prevent false operation of relay by artificial light sources, favoring a north orientation.

9.3 INSTALLATION OF INDIVIDUAL GROUND-MOUNTED LUMINAIRES

A. Aim as indicated on Drawings.

B. Install on concrete base with top 6 inches above finished grade or surface at luminaire location. Cast conduit into base, and finish by troweling and rubbing smooth. Concrete materials, installation, and finishing are specified in Section 033000 "Cast-in-Place Concrete."

9.4 CORROSION PREVENTION

A. Aluminum: Do not use in contact with earth or concrete. When in direct contact with a dissimilar metal, protect aluminum by insulating fittings or treatment.

B. Steel Conduits: Comply with Section 260131 "Raceways and Boxes." In concrete foundations, wrap conduit with 0.010-inch- (0.254-mm-) thick, pipe-wrapping plastic tape applied with a 50 percent overlap.

9.5 IDENTIFICATION

A. Identify system components, wiring, cabling, and terminals.

9.6 FIELD QUALITY CONTROL

A. Inspect each installed luminaire for damage. Replace damaged luminaires and components.

B. Perform the following tests and inspections with the assistance of a factory-authorized service representative:

1. Operational Test: After installing luminaires, switches, and accessories, and after electrical circuitry has been energized, test units to confirm proper operation.
2. Verify operation of photoelectric controls.

9.7 DEMONSTRATION

A. Engage a factory-authorized service representative to train Owner's maintenance personnel to adjust, operate, and maintain luminaires and photocell relays.

9.8 ADJUSTING

A. Occupancy Adjustments: When requested within 12 months of date of Substantial Completion, provide on-site assistance in adjusting the direction of aim of luminaires to suit occupied conditions. Make up to two visits to Project during other-than-normal hours for this purpose. Some of this work may be required during hours of darkness.

1. During adjustment visits, inspect all luminaires. Replace lamps or luminaires that are defective.
2. Parts and supplies shall be manufacturer's authorized replacement parts and supplies.
3. Adjust the aim of luminaires in the presence of the Architect.

END OF SECTION 265619

APPENDICES

A. Special Conditions For Work In The Public Right Of Way

B. General Construction Permit Exemption Determination Sheet

C. Soil Report

D. Standard City Details

E. Permits

F. City Drawing File No. 2025-D-010

APPENDIX A – SPECIAL PROVISIONS FOR WORK IN THE PUBLIC RIGHT OF WAY

The conditions set forth by the City Engineer for all construction work within the City Right of Way shall include the following:

GENERAL

1. All work to be performed under this permit shall be constructed in accordance with current applicable City of San Buenaventura Standard Construction Details, the current edition of the Standard Specifications for Public Works Construction, (SSPWC), and the project plans and specifications. If a conflict(s) with any of these above documents occurs, the City Engineer or designee will determine which provision is applicable.

2. Before the start of any work in the public street, the Permitee shall advise the Police Department of the name, address and telephone number of their responsible representative, or those of their Contractor's representative, who may be contacted in the event of any emergency at any time other than regular working hours. Call (805) 339-4400.

3. Public Works Capital Design Division shall be notified at least 1 working day in advance of any and all permit work involving excavations, testing, back filling and/or surfacing operations. An inspection appointment can be made by telephoning the project inspector. The project inspector's contact information will be provided at the preconstruction meeting.

4. The Permittee shall assume sole responsibility in determining the location of existing underground facilities prior to excavating and/or boring and in protecting same from harm. In accordance with State law, the Permittee shall contact Underground Service Alert (USA) at 1-800-227-2600 or x811, no less than 48 hours prior to any excavations within the right-of-way or on City property. USA's field locations of facilities shall be used to confirm the presence or new locations of facilities that might not be depicted accurately on the plans.

5. The Permittee is responsible for blacking out or removing all USA markings prior to completion of the permitted work.

6. The street shall be maintained free at all times from dust, mud, excess earth, and debris which constitute a nuisance and danger and, upon completion of the day, all excess material, trash, dust, and other debris shall be cleaned up and disposed of at a legal site to the satisfaction of the City Engineer or designee. Best Management Practices must be employed by the Contractor at all times.

7. Proper precautions shall be taken to protect all pavement, curbs and concrete structures from damage. Any portion damaged by Permittee's operations, in the sole opinion of the City Engineer or designee, shall be replaced in accordance with current Standard Construction Details and/or in a manner acceptable to the City Engineer or designee at Permitee's expense.

8. Any permit conditions, which are not met within a reasonable time, may be completed by the City with all costs to be paid by the Permittee. The City shall deduct such expenses from any payments due by City to Permittee.

9. All work shall have a one-year warranty by the Permittee after final acceptance by the City Engineer or designee. If any work is found to be defective within one year, it shall be repaired by the Permittee at their expense.

10. This permit is only for work within the City of San Buenaventura right-of-way, including City owned properties. A separate encroachment permit from another jurisdiction shall be required for any work to be performed within the right-of-way contiguous to City right-of-way.

11. Any hazardous materials found during construction shall be disposed of by the Permittee or Permittee's representative in a manner satisfactory to the City Engineer and the Ventura County Environmental Health Department.

12. All contractors performing work in the public right-of-way, including City owned property and easements, shall submit certificates of insurance and insurance endorsement forms, in accordance with the project specifications and/or in a manner acceptable to the City's Risk Manager/City Attorney, naming the City of San Buenaventura, its officials, employees, agents, and volunteers as additional insured's. The limits of liability for bodily injury, property damage, general liability and auto liability shall be $2,000,000 per occurrence unless a lower or higher limit is specified in the Project Specifications.

13. Any excavations occurring within a 25-foot radius of any street tree shall be subject to approval by and performed under the supervision of the City's Parks Manager or designee. Any damage to the street tree may result in tree replacement and/or replacement costs based on the value of the damaged tree that shall be borne by the contractor if the City determines that the contractor did not exercise reasonable care to avoid unnecessary damage during excavation work.

14. Construction equipment and materials shall not be stored within the public right-of-way unless approved by the City Engineer during non-working and non-construction hours.

15. The Contractor's construction superintendent shall notify all crews of construction work hours and enforce such hours on the project site. Said hours shall be limited to Monday through Friday from 7:00 a.m. to 5:00 p.m. unless otherwise noted in the Project Specifications or as otherwise approved by the City Engineer or designee. The construction work hours shall be noted on the improvement and building plans. The definition of work includes running or idling of equipment.

16. No work shall take place on any legal or City observed holidays unless otherwise approved by the City Engineer. City observed holidays are as follows:

    New Year's Day
    Martin Luther King, Jr., Birthday
    Presidents' Day
    Memorial Day
    Independence Day
    Labor Day
    Veteran's Day
    Thanksgiving Day
    Day After Thanksgiving Day

Christmas Day

17. Non-construction hours are all hours when the Contractor's employees are not physically present at the construction site actively performing contract work.

18. Night work between the hours of 5 p.m. and 7 a.m. of the following day will not be permitted unless otherwise allowed in the Project Specifications or if the contractor receives prior written approval by the City Engineer or designee.

19. Contractor shall remove all graffiti from equipment used on project sites within the City and from all surfaces on a project site. Graffiti shall be removed or painted over within 24 hours of notification from the City Engineer or designee.

TRAFFIC

20. Provisions shall be made for signs, delineators, barricades, lights and flagmen and adequate protection of the traveling public during construction operations. Traffic control shall be in conformance with the current California Manual on Uniform Traffic Control Devices (CMUTCD). Traffic control plan may be required to be approved prior to start of work.

21. Barricades shall be rearranged as conditions permit to provide less interference with traffic flow and provide for ADA accessibility for path of travel. Convenient access to driveways, walks, houses, and buildings shall be provided at all times unless otherwise approved, in advance, by the City, and where required by the City Engineer or designee, temporary bridges shall be placed and maintained where necessary.

22. All traffic lanes shall be open for public use on the days and at the time specified below, unless otherwise allowed in the Project Specifications or as otherwise approved by the City Engineer:

    1. Saturdays, Sundays and legal holidays: from 12:01 a.m. to 11:59 p.m.
    2. Fridays and any day preceding a legal holiday: from 3:00 to 11:59 p.m.
    3. All days not covered in 1 and 2 above:
       7:00 a.m. to 9:00 a.m.
       4:00 p.m. to 6:00 p.m.

23. To provide for the orderly and safe movement of traffic during the winter holiday season, construction that restricts the flow of traffic is prohibited on the following public streets between, and including, Thanksgiving Day and New Year's Day:

    Mills Rd. – Main St. to Telegraph Rd.
    Main St. – Telephone Rd. to Olive St.
    Telephone Rd. – Market St. to Portola Rd.
    California St. – Poli St. to Harbor Blvd.
    Victoria Ave. – Telegraph Rd. to Valentine Rd.
    Telegraph Rd. – Main St. to Mills Rd.

24. In the vicinity of any Elementary, Middle, or High school, the contractor shall determine arrival and departure times of said school and shall provide for adequate traffic control for any school age pedestrian and/or bicycle routes to the school during the arrival and

departure periods. The submittal of traffic control plans shall include arrival and departure times for each school. At no time will traffic control be allowed in the immediate vicinity so as to cause a hazard to a school pedestrian crosswalk during arrival and departure time periods.

25. Repaving projects on City designated local/residential roadways, except on roadways adjacent to a school, may be completely closed with proper notification to residents, as approved by the City Engineer. The roadway shall not be closed off until 8:00 a.m. and shall be reopened no later than 4:00 p.m. The contractor shall accommodate residents during closures.

26. On those days and hours when closure of traffic lanes is not prohibited under the provisions of the preceding items, no more than one lane may be closed at any time during construction hours. During any lane closure, type II flashing arrow boards shall be used in accordance with the CMUTCD on all streets with posted speeds of 35 MPH or higher.

27. Traffic signals shall not be placed in flash operation during the hours that traffic lanes must be kept open as defined above. Under no circumstances shall traffic signals be placed under flash operation without prior approval from the City. Traffic signals will only be placed on flash operations by City personnel. Contractor shall contact the Traffic Engineer at least 2 working days in advance to coordinate signal service.

28. At least 72 hours in advance of starting any work that may affect the access to private properties, the Permittee shall provide written notice to such property owners. When access must be restricted, as determined by the City Engineer or designee, it shall occur only for the time period required to accomplish the particular item of work.

29. Construction will only be allowed between the hours of 10 p.m. and 6 a.m. on the following streets:

    1. Mills Rd. - Main St. to Telegraph Rd.
    2. Main St. - Telephone Rd. to Olive St.
    3. Telephone Rd. - Market St. to Portola Rd.
    4. California St. - Poli St. to Harbor Blvd.
    5. Victoria Ave. - Telegraph Rd. to Valentine Rd.
    6. Telegraph Rd. - Main St. to Mills Rd.

TRENCHING

30. When the permit authorizes installation by an open trench method, not more than one lane of the street pavement shall be blocked to traffic at any one time unless approved by the City Engineer. All trenches shall be closed at the end of each working day and all traffic lanes or pedestrian travel ways shall be open. After the pipe is placed in the open section, the trench is to be back filled in accordance with Standard Construction Detail No.'s 112 and 113, and the latest revision thereto, the surfacing patched in a manner satisfactory to the City Engineer or designee, and that portion open to traffic before the pavement is cut for the next section. In lieu of back filling and surfacing, bridging with adequate steel plates may be used for a period not to exceed 3 days unless otherwise approved by the City Engineer or designee. When steel bridging plates are approved in traffic lanes for time periods exceeding 3 calendar days, the plates shall be inset flush

with pavement surface. Jacking under railroad tracks (subject to an acceptable agreement with the Southern Pacific Transportation Company), major city streets, and other structures will be required as specified by the City Engineer or designee.

31. All trenches shall be back filled or covered at night in such a manner to prevent accidental entry into the excavation by vehicles or pedestrians. Permanent pavement shall be placed within one week after completion of backfill operations unless a longer duration is allowed in the Project Specifications. Temporary asphalt concrete or steel plates with temporary asphalt concrete wedges around the plates shall be placed at the close of each day's operation unless otherwise approved by the City Engineer or designee.

32. All pipes are to be installed in a manner to provide a minimum clearance of 30 inches between the top of pipe and the finished surface unless otherwise approved by the City Engineer.

33. All backfill shall be in accordance with Standard Construction Detail No.'s 112 and 113 and the latest revisions thereto. The City Engineer or designee shall be the sole judge as to the acceptability of the excavated material for use as backfill. Important backfill shall be certified as being free of hazardous materials. Back filling the trench with slurry concrete class 100-E-100 is mandatory for streets under a 5-year overlay moratorium or 2 year slurry/cape seal moratorium and may be permitted on other streets under certain conditions as approved by the City Engineer or designee. The use of sand (with a sand equivalent of 20 or greater) will also be permitted in soil conditions where the sand will not migrate. In sandy fill for full depth, water settling or jetting for compaction may be permitted under certain conditions as approved by the City Engineer or designee.

PAVING

34. Rock or macadam base shall be replaced with untreated rock base equal in depth to that of the existing, except that the minimum depth shall be 6" unless otherwise indicated on the Plans. In lieu of untreated rock, Class 100-E-100 concrete, or asphalt concrete may be used. Paving over new concrete will not be allowed until 48 hours after concrete is placed.

35. All surface concrete pavement encountered shall be scored prior to excavation by means of a concrete saw. Repairs to concrete pavement shall be made with High-Early Strength Portland cement concrete containing a minimum of six sacks of cement per cubic yard, 560-C-3250.

36. All concrete shall contain Type II low alkali cement and Caltran's approved non-reactive aggregate. The thickness of concrete shall equal that of the existing, except a minimum of 6" shall be used. Concrete shall be satisfactorily cured and protected from vehicular traffic for not less than 3 days.

37. All AC pavement shall be scored to at least one-half its depth prior to excavation by means of a concrete or equivalent type saw. The AC patch shall be constructed to a minimum depth equal to that of the existing pavement plus 1". All joins between new AC and existing AC shall be sealed with an emulsion seal coat consisting of SS-1h emulsified asphalt.

38. New asphalt concrete shall be flush with existing surface, shall conform to the existing slope of pavement and extend one foot beyond the outside side of trench as shown on the Standard Construction Detail No. 112 and latest revisions thereto.

39. Existing concrete sidewalks shall be removed and replaced the full width of the existing sidewalk when removing or cutting for any reason. Existing sidewalk, curb, and/or gutters shall be removed to the nearest expansion joint or perpendicular score mark/cold joint by saw cutting prior to removal.

VENTURA KEYS' CHANNEL SLOPE REPAIR

40. All rip rap repair to the slopes of Ventura Keys channels shall be done in accordance with the City Standard Detail, entitled Rip Rap Standard Detail and in compliance with Coastal Development Permit (CDP) No. 4-94-173 and the Corps of Engineers 404 permit. By completing the repairs under this encroachment permit, the applicant is agreeing to abide by all conditions contained in CDP No. 4-94-173 and the Army Corps of Engineers permits.

STORM WATER POLLUTION CONTROL

41. All construction activities shall use Best Management Practices (BMPs) to effectively prohibit the entry of pollutants from the construction site into the storm drain system. For a complete listing of BMPs refer to the California Stormwater BMP Handbook-Construction at www.cabmphandbooks.com. The Engineer may require the contractor to prepare and submit a Stormwater Pollution Control Plan (SWPCP) or Stormwater Pollution Prevention Plan (SWPPP). The purpose of the SWPCP or SWPPP is to identify potential pollution sources that may affect the quality of discharges and to design the use and placement of BMPs.

VENTURA WATER (SEWER/WATER)

42. Sewer laterals shall be per City Standard Detail No. 204 Standard House Connection.

43. Slip-lining of existing sewer laterals will be allowed for existing dwelling units with the installation of a reducer at the wye connection. The slip-lining shall not be less than 4" inside diameter and shall consist of pipe material in accordance with City Standard Detail No. 200 "Sewer Line General Notes".

44. The City Water Department's "Chief Water Operator" is required to approve and monitor all work associated with tie-ins, hot tapping, connections, and alterations to the water system. Approved plans do not constitute an approval to perform any work on the City water system.

45. All potable water system valve operations shall be performed by, or under the direct supervision of, Ventura Water "Chief Water Operator." Coordinate all valve operations with the City Public Works Construction Inspector. Schedule all valve operations with the inspector 10 working days in advance.

SURVEY

46. Survey monuments, property markers, and tie points shall be preserved and referenced before construction and replaced after construction pursuant to Section 8771 of the Business and Professions Code. Monuments are typically located in the sidewalk or on the curb and can include tags, nails, and scribed crosses.

47. Benchmark disks shall not be destroyed, or disturbed until a replacement with a second order, class one, geodetic elevation has been accepted by the City Engineer.

APPENDIX B– GENERAL CONSTRUCTION PERMIT EXEMPTION DETERMINATION SHEET

GENERAL CONSTRUCTION PERMIT EXEMPTION DETERMINATION SHEET

Date: 5/8/26

Project Name: Interim Fire Station No.7

Project Address: 2269 Alessandro Drive

Project Scope Description:

The subject site features three modular buildings that will be assembled and delivered by the vendors. The project requires an over-excavation process for dewatering and the addition of artificial fill. Additional fill will be placed on the refilled surface to raise the grade by up to 4 feet. Three concrete foundations need to be constructed for the buildings. Furthermore, the contractor is responsible for connecting the plumbing, mechanical, and electrical utility lines from the buildings to the street. The contractor will also need to pave the driveway and parking areas with rigid concrete. Additionally, a detention pond will be constructed on the south side of the property to manage stormwater drainage.

Land Disturbance Area (ACRES): 1.90

Ling Liu
Engineer Name:

Engineer Signature:

5/8/26
Date

APPENDIX C – SOIL REPORT

ENGINEERING GEOLOGY AND GEOTECHNICAL ENGINEERING REPORT

FOR

PROPOSED INTERIM FIRE STATION NO. 7

2269 ALESSANDRO DRIVE

VENTURA, CALIFORNIA

PROJECT NO.: 306642-001

December 16, 2024

PREPARED FOR

CITY OF VENTURA PUBLIC WORKS DEPARTMENT

BY

EARTH SYSTEMS PACIFIC

5917 OLIVAS PARK DRIVE, SUITE F

VENTURA, CALIFORNIA

EARTH SYSTEMS
5917 Olivas Park Drive, Suite F | Ventura, CA 93003 | (805) 642-6727 | www.earthsystems.com

December 16, 2024

Project No.: 306642-001
Report No.: 24-12-45

Attention: Robert Hearne
City of Ventura
Public Works Department 501 Poli Street
Ventura, CA 93001

Project: Interim Fire Station No. 7
2269 Alessandro Drive
Ventura, California

As authorized, we have performed a geotechnical study for a proposed interim fire station to be located at 2269 Allesandro Drive in Ventura, California. The accompanying Engineering Geology and Geotechnical Engineering Report presents the results of our subsurface exploration and laboratory testing programs, as well as our conclusions and recommendations pertaining to geotechnical aspects of project design. This report completes Phase I of the scope of services described within our Proposal No. VEN-24-03-015 dated April 11, 2024, and authorized by you on April 16, 2024.

We have appreciated the opportunity to be of service to you on this project. Please call if you have any questions, or if we can be of further service.

Respectfully submitted,

EARTH SYSTEMS PACIFIC

Anthony P. Mazzei
Geotechnical Engineer

REGISTERED PROFESSIONAL ENGINEER
ANTHONY P. MAZZEI
GE 2823
EXP. 6-30-25
GEOTECHNICAL
STATE OF CALIFORNIA

12-16-2024

Anthony Luna
Engineering Geologist

PROFESSIONAL GEOLOGIST
ANTHONY LUNA
No. 2777
CERTIFIED
ENGINEERING
GEOLOGIST
STATE OF CALIFORNIA

12-16-2024

Copies: 1 - Client (via email)
1 - Project File

TABLE OF CONTENTS

INTRODUCTION 1
PURPOSE AND SCOPE OF WORK 1
SITE CONDITIONS 2
GEOLOGY 3
GEOLOGIC HAZARDS 4
SEISMIC SHAKING 4
FAULT RUPTURE 8
LANDSLIDING AND ROCK FALL 8
LIQUEFACTION, LATERAL SPREADING, AND SEISMIC-INDUCED SETTLEMENT OF DRY SANDS 8
FLOODING 12
SOIL CONDITIONS 13
GEOTECHNICAL CONCLUSIONS AND RECOMMENDATIONS 14
GRADING 15
Pre-Grading Considerations 15
Rough Grading/Areas of Development 16
Excavations 18
Temporary Shoring 19
Utility Trenches 21
Construction Dewatering 21
STRUCTURAL DESIGN 22
Mat Slab Foundations 22
Conventional Spread Foundations 23
Exterior Slabs-on-Grade 25
Frictional and Lateral Coefficients 25
Settlement Considerations 25
Retaining Walls 26
Preliminary Asphalt Pavement Sections 28
Preliminary Concrete Paving Sections 29
ADDITIONAL SERVICES 30
LIMITATIONS AND UNIFORMITY OF CONDITIONS 30
GENERAL BIBLIOGRAPHY 32

TABLE OF CONTENTS (Continued)

APPENDIX A

Vicinity Map
Regional Fault Map
Regional Geologic Map
Seismic Hazard Zones Map
Historic High Groundwater Map
Field Study
Site Plan
Geologic Cross-Section
CPT Logs
CPT Interpretations
Boring Logs
Boring Log Symbols
Unified Soil Classification Systems

APPENDIX B

Laboratory Testing
Tabulated Laboratory Test Results
Individual Laboratory Test Results
Table 1809.7

APPENDIX C

ATC Hazards by Locations
Deterministic Spectral Response Values Table
Site Specific Spectral Response Values
Fault Parameters

APPENDIX D

Results of Liquefaction and Seismic-Induced Settlement Analyses
Results of Lateral Spread Analyses

INTRODUCTION

This report presents results of an Engineering Geology and Geotechnical Engineering study performed for an interim fire station on a 2.9-acre property located at 2269 Allesandro Drive, just west of Seward Avenue, in Ventura, California. Only about half the site will be involved with the interim fire station. The proposed interim facility will be located north of a future permanent Fire Station No. 7.

In March 2023, Fugro USA Land, Inc. (Fugro) provided a geotechnical engineering report for a proposed permanent fire station on the subject property. This report is not intended to replace the findings of the Fugro report, but to verify the report and present independent recommendations, particularly site preparation and foundation recommendations for construction of the temporary fire station.

It is anticipated that the apparatus bay of the proposed interim fire station will be a one-story structure with an approximate footprint measuring 72 feet by 90 feet. Earth Systems understands that the apparatus bay will ultimately be a permanent structure. The temporary living quarters of the proposed interim fire station will be a one-story modular structure with an approximate footprint measuring 40 feet by 60 feet. We understand that there will be a 30-inch crawl space beneath the modular building to provide access to the plumbing and provide for a level entry to the modular doors from the parking lot. Maximum wall loads of 3 kips per lineal foot and maximum column loads of 100 kips were used for the apparatus bay as a basis for the recommendations of this report. For the temporary living quarters, we understand that the maximum wall load will be 1.5 kips per lineal foot and maximum column load will be 10 kips. If actual loads vary significantly from these assumed loads, Earth Systems should be notified since reevaluation of the recommendations contained in this report may be required.

PURPOSE AND SCOPE OF WORK

The purpose of the geotechnical study was to analyze the geology and soil conditions of the site with respect to the proposed improvements. These conditions include potential geohazards, surface and subsurface soil types, expansion potential, settlement potential, bearing capacity, and the presence or absence of subsurface water. The scope of work included:

1. Reconnaissance and geological mapping of the site.
2. Reviewing aerial photographs taken of the site and surrounding areas in 1945 by Fairchild Aerial Surveys, Inc.
3. Reviewing pertinent geologic literature.
4. Drilling, sampling, and logging two hollow-stem auger borings, one mud rotary boring, and performing four cone penetration test (CPT) soundings to study geologic, soil, and groundwater conditions.
5. Laboratory testing of soil samples obtained from the subsurface exploration to determine their physical and engineering properties.
6. Consulting with owner representatives and design professionals.
7. Analyzing the geotechnical data obtained.
8. Preparing this report.

Contained in this report are:

1. Descriptions and results of field and laboratory tests that were performed.
2. Discussions pertaining to the local geologic, soil, and groundwater conditions.
3. Conclusions pertaining to geohazards that could affect the site.
4. Conclusions and recommendations pertaining to site grading and structural design.

SITE CONDITIONS

The site is an approximately 3-acre parcel located northeast of Highway 101 and Alessandro Drive and northwest of Seaward Avenue. The majority of the site area for the proposed interim fire station is paved with asphalt pavement. Four existing large above-ground storage tanks are located within the footprint of the proposed buildings. We understand that these tanks will be removed.

Vista Del Mar Drive and the Union Pacific Railroad (UPRR) tracks are located northeast of the site boundary. An approximately 50-foot-high, 1.5H:1V (horizontal to vertical) to 2H:1V slope ascends from the site towards Vista Del Mar and the UPRR corridor. Existing residential properties are present along the top of the slope and west-southwest of Vista Del Mar Drive. The toe of the ascending slope is located about 20 feet from the footprint of the apparatus bay of the proposed interim fire station. Variable

height embankment fills supporting Alessandro Drive and Seaward Avenue are present along the southern and western perimeters of the site. Since these fills were placed for development of Seaward Avenue and the interchange at Highway 101.

Although fills placed for Alessandro Drive and Seaward Avenue are present adjacent to the property, the nature and extent of past grading that has occurred on the property or within the proposed building area footprint is not known. In our test borings, we encountered fill up to depth of about of 4.5 feet below the existing ground surface.

GEOLOGY

The site lies within the Ventura alluvial plain in the western portion of the Transverse Ranges geologic province. Numerous east-west trending folds and reverse faults indicative of ongoing north-south transpressional tectonics characterize the region. Ongoing regional compression produces the east-west trending faults that deform early Pleistocene to Tertiary aged marine and non-marine sedimentary bedrock units. These sedimentary bedrock units underlie the properties at unknown depths.

The site is not within any of the Fault Rupture Hazard Zones that have been delineated by the State of California, nor is it within any of the "Fault Displacement Zones" delineated within the Ventura County Seismic and Safety Element (1974).

The nearest fault of significance to the site is the Ventura Fault. It is a northwest dipping reverse fault and is located approximately 1.1 miles north of the subject site.

No faults or landslides were observed to be located on or trending into the subject property during the field study, during reviews of the referenced geologic literature, or during review of the aerial photographs taken of the site.

GEOLOGIC HAZARDS

Geologic hazards that may impact a site include seismic shaking, fault rupture, landsliding, liquefaction and flooding.

A. Seismic Shaking

1. Although the site is not within a State-designated "fault rupture hazard zone", it is located in an active seismic region where large numbers of earthquakes are recorded each year. Historically, major earthquakes (i.e. those with Richter magnitudes greater than 7.0) felt in the vicinity of subject site have originated from faults outside the area. These include the December 21, 1812 "Santa Barbara Region" earthquake, that was presumably centered in the Santa Barbara Channel, the 1857 Fort Tejon earthquake, the 1872 Owens Valley earthquake, and the 1952 Arvin-Tehachapi earthquake.

2. It is assumed that the 2022 CBC and ASCE 7-16 guidelines will apply for the seismic design parameters. The 2022 CBC includes several seismic design parameters that are influenced by the geographic site location with respect to active and potentially active faults, and with respect to subsurface soil or rock conditions. The “general procedure” (i.e., probabilistic) seismic design parameters presented below were retrieved from the Seismic Hazards by Location calculator on the American Technology Council website. The data were retrieved for the ASCE 7-16 design code, for the site coordinates 34.2671° North Latitude and 119.2694° West Longitude, Site Class E, and for Occupancy (Risk) Category IV (which includes fire stations). A listing of the calculated 2022 CBC and ASCE 7-16 Seismic Parameters is presented below and again in Appendix C.

Summary of Seismic Parameters –2022 CBC “General Procedure”

Site Class (ASCE 7-16)	E
Occupancy (Risk) Category	IV
Seismic Design Category	See ASCE 7-16 Section 11.4.8
Maximum Considered Earthquake (MCE) Ground Motion	
Spectral Response Acceleration, Short Period – S_s	1.956 g

Spectral Response Acceleration at 1 sec. – S_1	0.735 g
Site Coefficient – F_a	See ASCE 7-16 Section 11.4.8
Site Coefficient – F_v	See ASCE 7-16 Section 11.4.8
Site-Modified Spectral Response Acceleration, Short Period – S_{MS}	See ASCE 7-16 Section 11.4.8
Site-Modified Spectral Response Acceleration at 1 sec. – S_{M1}	See ASCE 7-16 Section 11.4.8
Design Earthquake Ground Motion	
Short Period Spectral Response – S_{DS}	See ASCE 7-16 Section 11.4.8
One Second Spectral Response – S_{D1}	See ASCE 7-16 Section 11.4.8
Site Modified Peak Ground Acceleration - PGA_M	0.945 g
Values appropriate for a 2% probability of exceedance in 50 years	

The seismic factor S_1 is greater than 0.2 g and the Site Class is ”E”. If the structural engineer determines that the exceptions of ASCE 7-16, Section 11.4.8, do not apply, a site-specific (i.e., deterministic) ground motion hazard analysis is required. The United States Geological Survey (USGS, 2009) has undertaken a probabilistic earthquake analysis that covers the continental United States and takes into account soil amplification effects. A reasonable site-specific spectral response curve may be developed from USGS Unified Hazard Tool web page, which adjusts for site-specific ground factors. The interactive webpage appears to be a precise calculation based on site coordinates. For the purposes of this study, the Dynamic: Conterminous U.S. 2014 (Update) (Version 4.20) values have been chosen for use in the analysis. The shear wave velocity (Vs) used in the analysis for Site Class E was 150 meters per second.

NGA West2 2014 attenuation relationships were used in the analyses. These attenuations included those of Kumai, Abrahamson, and Silva (2013), Boore, Stewart, Seyhand, and Atkinson (2014), Campbell and Bozorgnia (2014), Chiou and Youngs (2014), and Idriss (2014).

Summary of Seismic Parameters – 2022 CBC “Site-Specific Procedure”

Site Class (ASCE 7-16)	E
Occupancy (Risk) Category	IV
Seismic Design Category	D

Maximum Considered Earthquake (MCE) Ground Motion	
Spectral Response Acceleration, Short Period – S_s	1.956 g
Spectral Response Acceleration at 1 sec. – S_1	0.735 g
Site Coefficient – F_a	1.00
Site Coefficient – F_v	4.00
Site-Modified Spectral Response Acceleration, Short Period – S_{MS}	1.786 g
Site-Modified Spectral Response Acceleration at 1 sec. – S_{M1}	2.842 g
Design Earthquake Ground Motion	
Short Period Spectral Response – S_{DS}	1.191 g
One Second Spectral Response – S_{D1}	1.895 g
Site Modified Peak Ground Acceleration - PGA_M	0.756 g
Values appropriate for a 2% probability of exceedance in 50 years	

The attached Fault Parameters table lists the significant "active" and "potentially active" faults within an approximate 35-mile radius of the project site. The distance between the project site and the nearest portion of each fault is shown as well as the respective estimated maximum earthquake magnitudes.

3. Southern Ventura County has been mapped by the California Division of Mines and Geology to delineate areas of varying predicted seismic response. The soils that underlie the subject area are mapped as having a probable maximum intensity of earthquake response of approximately VII on the Modified Mercalli Scale. Historically, the highest observed intensity of ground response has been VII in the Oxnard and Saticoy areas (C.D.M.G., 1975).
4. The San Andreas is the dominant active fault in California. The fault extends from the Gulf of California to Cape Mendocino in northern California. That portion of the zone extending southward from Parkfield, California is estimated to have been active for the last 12 million years. As much as 190 miles of right lateral displacement has occurred across the zone (Crowell, 1975). This displacement includes offsets on the actual San Andreas Fault and related faults that include the Imperial, Banning, Mission Creek, and San Jacinto faults.

5. Historically, the San Andreas Fault is responsible for two of the three "great" earthquakes experienced in California. ("Great" earthquakes are defined as having Richter magnitudes that are equal to or greater than 8.0.) These are the 1857 Fort Tejon and 1906 San Francisco earthquakes. Each event is credited with approximately 200 miles of surface rupture and horizontal displacements of up to 30 feet. Ground shaking was very intense and damage to man-made structures very widespread. The 1857 rupture extended along the San Andreas Fault from near Bakersfield to Cajon Pass and was felt throughout most of California. Horizontal displacements of 10 to 13 feet were observed along the fault in the Palmdale area.
6. Recurrence intervals for major earthquakes in southern California are best documented for the San Andreas Fault. It is estimated that a major earthquake has occurred along the southern portion of the San Andreas Fault every 100 to 200 years (Sieh, 1978). The average recurrence interval is estimated to be 140 years. The last major earthquake on the San Andreas Fault in the southern California area occurred in 1857; therefore, the occurrence of a major event in the same general area is considered likely within the estimated lifetime of any new construction.
7. On December 21, 1812, an estimated 7.0 Richter magnitude event occurred in an area believed to be offshore in the western part of the Santa Barbara Channel. This earthquake caused considerable shaking in the area of the proposed project.
8. On March 26, 1872, the greatest recorded earthquake in the western United States, excluding Alaska, occurred along the Owens Valley Fault near Lone Pine. The earthquake is estimated to have had a Richter magnitude of 8.25, and significantly shook most of California.
9. On July 21, 1952, the Arvin-Tehachapi earthquake occurred on the White Wolf Fault. The earthquake registered 7.7 on the Richter Scale and was felt throughout southern California.

B. Fault Rupture

Surficial displacement along a fault trace is known as fault rupture. Fault rupture typically occurs along previously existing fault traces. As mentioned in the section above, no existing fault traces were observed to be crossing the site in any of the referenced documents, including the Ventura County General Plan. As a result, it is the opinion of this firm that the potential for fault rupture on this site is low.

C. Landsliding and Rock Fall

The subject site is essentially flat; however, an approximately 50-foot-high slope ascends from the northeast property line to the residential properties adjacent to Vista Del Mar Drive. The toe of the slope is located about 20 feet from the footprint of the apparatus bay of the proposed interim fire station. Variable height embankment fills supporting Alessandro Drive and Seaward Avenue are present along the southern and western perimeters of the site. Since these fills were placed for development of Seaward Avenue and the interchange at Highway 101, we have assumed that those embankment fills were previously analyzed and found to be stable. Evaluation of the stability of 50-foot-high ascending slope and embankment fills was not part of our scope of work for this study.

There are not exposed rock faces or bedrock outcrops on the slopes surrounding the site, therefore rock fall does not pose a hazard to the project.

D. Liquefaction, Lateral Spreading, and Seismic-Induced Settlement of Dry Sands

Earthquake-induced vibrations can be the cause of several significant phenomena, including liquefaction in fine sands and silty sands. Liquefaction results in a loss of strength and can cause structures to settle or even overturn if it occurs in the bearing zone. Liquefaction is typically limited to the upper 50 feet of soils underlying a site.

Fine sands and silty sands that are poorly graded and lie below the groundwater table are the soils most susceptible to liquefaction. Soils that have I_c values greater than 2.6, soils with plasticity indices greater than 7, sufficiently dense soils, and/or soils located above the groundwater table are not generally susceptible to liquefaction.

An examination of the conditions existing at the site, in relation to the criteria listed above, indicates the following:

1. Groundwater was encountered at a depth of 4 feet below the ground surface in the borings drilled for this study. Regional mapping of historical high groundwater by California Geological Survey indicates that groundwater has been approximately 9 feet of the ground surface. Therefore, a groundwater depth of 4 feet was used in our liquefaction analyses.
2. With the exception of CPT-3, the soil profile beneath the proposed interim fire station within the depths evaluated generally consists of non-plastic sands and silts. Sounding CPT-3 indicated that the soils between the depths of 25 and 40 feet were predominantly silts and clays. Boring B-3 was drilled at the approximate location of sounding CPT-3 to confirm the subsurface conditions at this location. Boring B-3 confirmed that the soil profile consisted of non-plastic sands and silts, similar to that encountered in borings B-1 and B-2. Therefore, sounding CPT-3 was not used to evaluate the liquefaction potential.
3. Standard penetration tests conducted in the borings indicate that soils within the tested depths are in a variably dense state.

Based on the above, cyclic mobility analyses were undertaken to analyze the liquefaction and seismic-induced settlement potentials of the various soil layers. The liquefaction analyses were performed in general accordance with the methods proposed by NCEER (1997). In the analyses, the design earthquake was considered to be a 7.10 moment magnitude event, and a site adjusted peak ground acceleration of 0.945 g was assumed, as per the discussion in the "Seismicity and Seismic Design" section of this report. Soil stratigraphic and engineering data interpreted from Borings B-1. B-2, and B-3 were analyzed for their liquefaction potential.

To account for the presence of gravels in the underlying marine terrace deposits and alluvial soils and their effect on the liquefaction results, the lowest blow count recorded for the final two 6 inches of penetration in layers with little amounts of gravels was doubled to represent the final foot. For the gravel layers encountered

between the depths of 22 and 24 feet and 53 and 55 feet in Boring B-2 and between the depths of 19.5 and 26 feet in Boring B-3, the N-value used in the liquefaction analysis for these layers was taken as lowest N-value for the layer above or below the gravel layer.

Analyses were performed using Earth Systems' proprietary spreadsheet. In this proprietary spreadsheet, the peak ground acceleration is used for soil layers below the groundwater level to evaluate the liquefaction potential and settlement, whereas two-thirds of the peak ground acceleration is applied to soil layers above the groundwater level to evaluate the seismic-induced settlement of dry sands. The total induced subsidence shown on the results in Appendix C is the combination of liquefaction-induced settlements and seismic-induced settlement of dry sands.

Zones with factors of safety less than 1.3 are considered potentially liquefiable (C.G.S., 2008, and SCEC, 1999). Analyses indicate that approximately 6 feet of soil in Boring B-1, approximately 13.5 feet in Boring B-2, and approximately 18.5 feet in Boring B-3 had factors of safety less than 1.3.

The volumetric strain for the potentially liquefiable zones was estimated using a chart derived by Tokimatsu and Seed (1987) after reducing the $N_{1(60)}$ values derived by the analytical program by the calculated triggering "FC Delta" value, then making adjustments for fines content per Seed (1987) and SCEC (1999). Using this methodology, the volumetric strain was found to be as follows:

Boring Number	Seismic-Induced Settlement (in.)	
	Without Remedial Grading	With 7 Feet of Remedial Grading
B-1	2.8	0.6
B-2	2.9	1.8
B-3	3.5	3.5

According to data generated by Ishihara (National Academy Press, 1985), "ground" damage would not be expected related to the potentially liquefiable zones because of the thickness of non-liquefiable soils above the shallowest liquefiable zone at the locations of Boring B-3. (Examples of ground damage are sand boils and ground cracks.) However, there is the potential for “ground” damage at the locations of Borings B-1 and B-2. Construction of a geogrid reinforced gravel raft beneath the proposed interim fire station will mitigate the potential for ground damage at the site.

As shown in the table above, the total seismic-induced settlement without remedial grading could potentially range from 2.8 to 3.5 inches in the area of the proposed interim fire station. With removal and replacement of the upper 7 feet, the total seismic-induced settlement could potentially range from 0.6 to 3.5 inches as shown in the table above. Because multiple locations were evaluated for the potential of liquefaction-related settlement, the anticipated differential settlement was taken as the difference in the estimated settlement between Boring B-1 and Boring B-3, which had the greatest difference in estimated total seismic-induced settlement within the shortest distance. The difference in total seismic-induced settlement between Boring B-1 and Boring B-3 is 2.9 inches over a distance of 105 feet (or 0.0023L). This assumes that the settlement is linearly differential over distance; however, soils are notoriously non-uniform.

”Free face” lateral spreading does not appear to pose a potential hazard because there are no nearby sloped areas or canyons (Bartlett and Youd, 1995). “Ground slope” lateral spreading, sometimes referred to as “ground oscillation”, can occur when adjusted blow counts ($N_{1(60)}$) measured within potentially liquefiable zones are less than 15. Potentially liquefiable zones with ($N_{1(60)}$) less than 15 were encountered within the depths explored at the locations of Borings B-1, B-2, and B-3. The potentially liquefiable zones with ($N_{1(60)}$) less than 15 were encountered between the depths of approximately 4 to 7 feet in Borings B-1 and B-2. Because these soils will be removed and replaced during remedial grading, lateral spreading was not evaluated for these borings. In Boring B-3, potentially liquefiable zones with ($N_{1(60)}$) less than 15 were encountered between the depths of approximately 7 to 10 feet and 37 and 42.5 feet. The cumulative thickness of these layers was approximately 8.5 feet, or 2.59 meters, at the location of Boring

B-3. The potential ground oscillation was analyzed in accordance with procedures developed by Youd, Hansen and Bartlett (2002). In the analyses, the ground surface slope was 1.5% and the fines content for the liquefiable zones with a ($N_{1(60)}$) value less than 15 was 37% based on the sieve analysis performed. The cumulative horizontal displacement was calculated to range from 1.5 feet if all potentially liquefiable zones with a ($N_{1(60)}$) value of less than 15 were to liquefy simultaneously and run continuously beneath the site. (Calculations are included within Appendix D of this report.) However, potentially liquefiable zones with ($N_{1(60)}$) less than 15 encountered in Boring B-3 were not encountered in Borings B-1 and B-2 located on either side of Boring B-3, thus the zones do not appear to be continuous beneath the proposed interim fire station.

Based on the above, it is the opinion of this firm that there is a potential for liquefaction at the project site. Because the potentially liquefiable zones with ($N_{1(60)}$) less than 15 do not appear to be continuous, the potential for lateral spreading is considered low.

E. Flooding

Earthquake-induced flooding types include tsunamis, seiches, and reservoir failure. The site is not near any lakes; thus, hazard posed by seiches is nil. The site is not located within a tsunami inundation zone delineated by CEMA, et al. (2009). Thus, a potential hazard posed by a tsunami is considered low.

According to the Ventura County General Plan Hazards Appendix (2013), the project site is not located within a dam failure inundation zone for Lake Castaic, Pyramid Lake, Lake Piru, or Bouquet Canyon Dam. Proper maintenance of these dams is anticipated, and assuming the maintenance continues as planned, the hazard posed by reservoir failure appears to be low.

The site is within an area mapped by FEMA as "Areas of minimal flood hazard" From this, it appears that the hazard posed by storm-induced flooding is low.

SOIL CONDITIONS

Artificial fill soils were encountered at the ground surface at all of the boring locations. The artificial fill soils consist of loose to medium dense silty sands and extend to depths ranging from 4 to 4.5 feet below existing site grades. Marine terrace deposits were encountered beneath the artificial fill and extend to depths ranging from 18 to 24 feet below existing site grades. The marine terrace deposits consist of variably dense sands and gravels. The marine terrace deposits were underlain by native alluvial soils that extended to the maximum depth explored of 61.5 feet below the existing ground surface. The alluvial soils consist of variably dense sands, silts, and gravels to the maximum depth explored of 61.5 feet. A more detailed description of the soils encountered is shown on the boring logs presented in Appendix A of this report.

Groundwater was encountered at a depth of approximately 4 feet below the existing ground surface in Borings B-1 and B-2 and encountered at a depth of approximately 6 feet in Boring B-3. Regional mapping of historical high groundwater by California Geological Survey indicates that groundwater has been within approximately 9 feet of the ground surface. It should also be noted that fluctuations in the groundwater levels and soil moisture conditions do occur due to change in seasons, variations in rainfall, irrigation practices, construction impacts, and other factors.

Testing indicates that anticipated bearing soils lie in the “Very Low” expansion range of Table 1809.7 because the expansion index was found to be 0. [A locally adopted version of this classification of soil expansion is included in Appendix B of this report.] It appears that soils can be cut by normal grading and/or drilling equipment.

Samples of near-surface soils were tested for pH, resistivity, soluble sulfates, and soluble chlorides. Sulfate contents (66 mg/Kg) were in the "S0" ("negligible") exposure class of Table 19.3.1.1 of ACI 318-19; therefore, it appears that special concrete designs will not be necessary for the measured sulfate contents. Based on criteria established by the County of Los Angeles (2013), measurements of resistivity of near-surface soils (7,100 ohms-cm) indicate that they are "moderately” corrosive to ferrous metal (i.e., cast iron, etc.) pipes. The test results provided in Appendix B should be distributed to the design team for their interpretations pertaining to the corrosivity or reactivity of various construction materials (such as concrete and piping) with the soils. Tests should be

conducted of the surface soils in the final graded pad to verify these interpretations, especially if the soils are mixed and additional fill is added during site preparation.

GEOTECHNICAL CONCLUSIONS AND RECOMMENDATIONS

Based on the data provided in this report, it appears that the site is suitable for the proposed development from Engineering Geology and Geotechnical Engineering standpoints provided that the recommendations provided herein are properly implemented into the project. The primary geotechnical considerations from a development standpoint are as follows:

- The presence of interbedded liquefiable and non-liquefiable soils that extend to a depth of approximately 61.5 feet below the existing ground surface.
- The potential for about 3.5 inches of total seismic-induced settlement due to liquefaction and settlement of dry sands.
- Shallow groundwater at a depth of about 4 feet below the existing ground surface.

Based on the anticipated total combined settlement (i.e., static and seismic-induced) and total combined differential settlement at the subject site, we conclude that a rigid foundation system (i.e., mat or “waffle” foundations) should be used for support of the apparatus bay that will ultimately be a permanent structure. We understand that the temporary living quarters of the proposed interim fire station will be supported by conventional spread foundations. The anticipated total combined settlement (i.e., static and seismic-induced) and total combined differential settlement estimated for the subject site would typically prohibit a structure from being supported by conventional spread footings. However, we understand that the City has elected to support the temporary living quarters on conventional spread footings since the modular structure is only temporary and adjustments can be made to raise the structure should the settlements be excessive.

To mitigate the anticipated liquefaction-related effects, Earth Systems recommends that a geogrid reinforced gravel raft be constructed beneath the proposed interim fire station. The intent of the geogrid reinforced gravel raft is to stiffen the underlying soils so that they act as a block that would result in more uniform settlement beneath the structures and move as a unit in the case of lateral spreading.

Because of the shallow groundwater, dewatering most likely will be required during grading to allow construction of the geogrid reinforced gravel raft. Dewatering can result in ground subsidence as the groundwater level is lowered. Therefore, we recommend construction dewatering be performed by a qualified contractor and that periodic monitoring of the adjacent improvements (i.e., asphalt pavement, buildings, etc.) be performed during dewatering operations.

A. Grading

1. Pre-Grading Considerations

a. Roof draining systems should be designed so that water is not discharged into bearing soils or near structures. Final site grade should be designed so that all water is diverted away from the structures over paved surfaces, or over landscaped surfaces in accordance with current codes. Water should not be allowed to pond anywhere on the pad.

b. Shrinkage of soils (uncertified fills and marine terrace deposits) affected by compaction is estimated to be about 15 percent based on an anticipated average compaction of 92 percent.

c. Earth Systems should be retained to provide engineering geology and geotechnical engineering services during site development and grading, and foundation construction phases of the work to observe compliance with the design concepts, specifications and recommendations. This will allow for timely design changes in the event that subsurface conditions differ from those anticipated prior to the start of construction.

d. Plans and specifications should be provided to Earth Systems prior to grading. Plans should include the grading plans, foundation plans, and foundation details. Earth Systems will review these plans only for conformity with geotechnical parameters not including drainage. It is the responsibility of the Client and other Engineers to review and approve designs and plans for conformity with all engineering and design requirements necessary for the proper function and performance of the structure.

e. Compaction tests should be made per ASTM D 6938 or ASTM D 1556 to determine the relative compaction of the fills in accordance with the following minimum guidelines: two tests for each 1-foot vertical lift in every isolated area graded; one test for each 500 cubic yards of material

placed; and two tests at finished subgrade elevation in every area of remedial grading.

2. Rough Grading/Areas of Development
   a. Grading at a minimum should conform to Appendix J in the 2022 California Building Code (CBC), and with the recommendations of the Geotechnical Engineer during construction. Where the recommendations of this report and the cited section of the 2022 CBC are in conflict, the Owner should request clarification from the Geotechnical Engineer.
   b. The existing ground surface should be initially prepared for grading by removing all existing grass, topsoil, other organic material, pavement, concrete debris, and non-complying fill. Organics and debris should be stockpiled away from areas to be graded, and ultimately removed from the site to prevent their inclusion in fills. Voids created by removal of such material should be properly backfilled and compacted. No compacted fill should be placed unless the underlying soil has been observed by the Geotechnical Engineer, or his representative.
   c. Overexcavation and recompaction of soils in the building area will be necessary to decrease the potential for differential settlement and provide more uniform bearing conditions. Soils should be overexcavated to a depth of 7 feet below the existing ground surface throughout the entire building footprint. The overexcavation should extend laterally to a distance of 10 feet beyond the perimeter of the building. Surfaces resulting from overexcavation should be scarified an additional 6 inches, moisture conditioned, and recompacted. The intent of these recommendations is to have a minimum of 3 feet of compacted soil below the bottoms of all footings.
   d. Areas outside of the building areas to receive fill, exterior slabs-on-grade, sidewalks or paving should be overexcavated to a depth of one foot or as deep as necessary to remove all existing artificial fill, whichever is deeper. The resulting surface should then be scarified an additional 6 inches, moisture conditioned, and recompacted.
   e. The bottoms of all excavations should be observed by a representative of this firm prior to processing or placing fill.

f. To minimize liquefaction-related differential settlements that may result during a design seismic event, the soils underlying the proposed interim fire station should be reinforced with two layers of geogrids to create a reinforced gravel raft beneath the proposed interim fire station. Following compaction of the bottom of the remedial excavation, a layer of geogrid should be placed on the prepared subgrade that extends across the entire area of overexcavation and up the sidewalls of the remedial excavation. The reinforcing geogrids should consist of Tensar InterAx NX850, or equivalent as approved by the Geotechnical Engineer. The bottom layers or sheets of geogrid should be overlapped at least 3 feet. A 1-foot layer of 1-inch minus aggregate base material should be placed and compacted over the bottom layer of geogrid. The aggregate base material should be uniformly moisture conditioned to above the optimum moisture content and compacted to achieve a relative compaction of at least 95 percent of the ASTM D 1557 maximum dry density. A second layer of geogrid should be placed over the compacted aggregate base material. The second layer of geogrid should be overlapped 1-foot and extend across the entire excavation; however, it does not need to extend up the sidewalls. An additional foot of aggregate base material should be placed and compacted on top of the second geogrid layer. Once the second lift of aggregate base material has been compacted to achieve a minimum relative compaction of 95% of the ASTM D 1557 maximum dry density, the bottom layer of geogrid extending up the sidewall of the remedial excavation should be folded back onto the compacted surface to create an 8-foot overlap onto the compacted base material. The remedial excavation may then be brought up to finished grade using the excavated soil compacted to at least 95 percent of the ASTM D 1557 maximum dry density. The geogrid should be installed in accordance with the manufacturer's recommendations.

g. On-site soils may be used for fill once they are cleaned of all organic material, rock, debris and irreducible material larger than 6 inches.

h. Fill and backfill placed above the optimum moisture content in layers with loose thickness not greater than 8 inches should be compacted to a minimum of 90% of the maximum dry density obtainable by the ASTM D 1557 test method unless otherwise recommended or specified by the

Geotechnical Engineer or his/her representative. Random compaction tests by Earth Systems can assist the Grading Contractor in evaluating whether the Grading Contractor is meeting compaction requirements. However, compaction tests pertain only to specific locations and do not guarantee that all fill has been compacted to the prescribed percentage of maximum density. It is the ultimate responsibility of the Grading Contractor to achieve uniform compaction in accordance with the requirements of this report and the grading ordinance.

i. Import soils used to raise site grade should be equal to, or better than, on-site soils in strength, expansion, and compressibility characteristics. Import soil can be evaluated but will not be prequalified by the Geotechnical Engineer. Final comments on the characteristics of the import will be given after the material is at the project site.

j. According to the 2022 CBC Section 1804.4, the ground immediately adjacent to the foundation shall be sloped away from the building at a slope of not less than 5% for a minimum distance of 10 feet measured perpendicular to the face of the wall.

3. <u>Excavations</u>

a. Excavations anticipated for remedial grading at the site will typically encounter silty sands, relatively clean sands, and groundwater. After dewatering, these materials should be able to be excavated with conventional earthmoving equipment.

b. Temporary unshored, unsurcharged, open excavations above the groundwater level may be cut vertically to a maximum height of no more than 4 feet. Excavations extending higher than 4 vertical feet should be sloped back above the 4-foot vertical cut to at least 1.5H:1V (horizontal to vertical) or flatter provided the adjacent ground is not subject to surcharge loading. If excavations dry out, sloughing will occur. No excavation should be made within a 1:1 line projected downward from the outside edge at the base of any existing footing or slab.

c. During the time excavations are open, no heavy grading equipment or other surcharge loads (i.e., excavation spoils) should be allowed within a horizontal distance from the top of any slope equal to the depth of the

excavation (both distances measured from the top of the excavation slope).

d. Adequate measures should be taken to protect any structural foundations, pavements, or utilities adjacent to any excavations.

e. All open cuts should be in compliance with applicable Occupational Safety Health Administration (OSHA) regulations (California Construction Safety Orders, Title 8) and should be monitored for evidence of incipient instability. Standard construction techniques should be sufficient for temporary site excavations. Project safety is the responsibility of the Contractor and the Owner. Earth Systems will not be responsible for project safety.

4. Temporary Shoring

Earth Systems anticipates that excavations for the recommended remedial grading will be approximately 7 to 8 feet deep. If laying back the slope is not feasible, temporary shoring would be necessary. The shoring may consist of cantilevered or braced/tieback sheet pilling or cantilevered or braced soldier beam and lagging systems or similar temporary shoring system. For the purposes of this report, the temporary shoring is assumed to be a cantilevered soldier beam and lagging shoring system.

a. Cantilevered temporary shoring for construction of the recommended remedial grading should be designed to resist active lateral earth pressures. The temporary shoring system should be designed for 36 pcf of equivalent fluid weight per foot of depth measured below the top of the retained ground surface behind the shoring.

b. The lateral earth pressure to be resisted by the temporary shoring should be increased to allow for surcharge loads. The surcharge considered should include the loads from any other structures or vehicle traffic within a distance at least equal to the height of the shoring. Surcharge effects for cantilevered shoring may be computed assuming active earth pressure conditions using a pressure coefficient of 0.35.

c. Lateral (horizontal) loads may be resisted by passive resistance of soil against the piers. An equivalent fluid weight (EFW) of 350 psf per foot of penetration in firm, native soil above the groundwater table may be used for lateral load design. Below the groundwater table, an EFW of 175 pcf

may be used. These resisting pressures are ultimate values. The maximum passive pressure used for design should not exceed 3,500 psf. For soldier piers spaced at least 3 diameters apart, an effective width of 2.5 times the actual pile diameter may be used for passive pressure calculations.

d. Axial loads on the soldier piers may be resisted by skin friction on the piers below the depth of the excavation (assumed to be approximately 7 to 8 feet below existing grade). Drilled piers for the shoring system should extend at least 15 feet below the deepest excavation level (approx. 7 to 8 feet) and be a minimum of 2 feet in diameter. The skin friction on the proposed soldier piers above and below the lowered groundwater level due to construction dewatering may be taken as 200 psf. The skin friction should be multiplied by the perimeter surface area of the grouted soldier pile.

e. To limit sloughing, exposed soil between soldier piers should be supported by lagging and voids that are backfilled. Backfill of voids behind lagging should consist of concrete slurry (1- to 2-sack of cement per CY) placed so that no voids remain between the lagging and the excavation face of soil or bedrock. Alternatively, exposed soil and bedrock supported through the use of reinforced gunite or other approved material designed to minimize soil movement. Because of arching, the lateral earth pressure on lagging may be taken as 60 percent of the overall lateral earth pressure on the shoring system (need not include seismic pressure). All timber lagging to be left in the ground should be pressure treated in accordance with Standard Specifications for Public Works Construction, Section 204-2. Elimination of lagging from portions of the excavation may be considered depending upon the stability of the material as observed after installation of soldier piers and during excavation. Lagging may be eliminated only upon approval of the Geotechnical Engineer and the City of Ventura.

f. It is recommended that Earth Systems review the plans and specifications for the proposed shoring system and that an Earth Systems representative observe and monitor the installation of the shoring.

5. Utility Trenches

a. Utility trench backfill should be governed by the provisions of this report relating to minimum compaction standards. In general, on-site service lines may be backfilled with native soils compacted to 90% of maximum density. Backfill of offsite service lines will be subject to the specifications of the jurisdictional agency or this report, whichever are greater.

b. Utility trenches running parallel to spread footings should be located at least 5 feet outside footing lines. However, regardless of the distance outside footing lines, the utility line within the trench should be located above a 1:1 (horizontal to vertical) projection downward from the outside edge of the bottom of the footing. If the utility line is located below the 1:1 projection, the trench will need to be backfilled with slurry to a level above the 1:1 projection.

c. Compacted native soils should be utilized for backfill below structures. Sand should not be used under structures because it provides a conduit for water to migrate under foundations.

d. Backfill operations should be observed and tested by the Geotechnical Engineer to monitor compliance with these recommendations.

e. Jetting should not be utilized for compaction in utility trenches.

f. We recommend that flexible connections should be provided where critical underground utilities enter buildings or other proposed improvements to accommodate the anticipated differential movements due to seismic-induced settlements.

6. Construction Dewatering

a. As discussed above, groundwater was encountered as shallow as approximately 4 feet below the existing ground surface in the borings drilled for this study. Based on the anticipated depth of remedial grading necessary to construct the geogrid reinforced gravel raft, the bottom of the excavation will be 3 to 4 feet below the most recent groundwater level recorded in the area of the proposed interim fire station. To provide a reasonably dry working area in the bottom of the excavation during construction, we recommend that the groundwater level be

lowered to a minimum of 3 feet below the bottom of the deepest excavation level.

b. The contractor should verify that the water level has been lowered to at least 3 feet below the lowest planned excavation depth by potholing or other methods prior to beginning excavation work for the proposed structures.

c. Design and operation of any dewatering system will be the responsibility of the Contractor. However, Earth Systems anticipates that sumps equipped with a pump may be necessary to remove groundwater from within the remedial excavations during construction geogrid reinforced gravel raft. Sizing and operation of the pumps will be the responsibility of the Contractor.

d. Regardless of the type of dewatering scheme used, a properly designed, installed, and operated dewatering system should (1) lower the groundwater table and intercept seepage which would otherwise emerge from the sidewalls or bottom of the excavation; (2) improve the stability of the excavation sidewalls and bottom; (3) provide a reasonably dry working area in the bottom of the excavation throughout backfill placement; and (4) lower the groundwater to a minimum of 3 feet below the bottom of the remedial excavations.

B. Structural Design

1. Mat Slab Foundations

a. We understand that the apparatus bay will be supported by a mat slab foundation underlain by a combination of compacted fill and a geogrid reinforced gravel raft as recommended in Section A of this report.

b. To limit the maximum total settlement under static conditions to about 1 inch, an allowable “net” bearing capacity of 550 pounds per square foot (psf), for loads distributed over the full footprint of the mat foundation, may be utilized for dead and sustained live loads for design of the mat foundation of the proposed living quarters and apparatus bay.

c. An allowable “net” bearing capacity of 2,000 psf may be used for thickened edges or other concentrated load areas. These values include a safety factor of at least 3.0 and assume that ground improvement is not performed beneath the structures. A one-third increase in this value

is permitted for use with the alternative load combinations given in Section 1605.2 of the 2022 CBC.

d. A modulus of subgrade reaction ("k_p") value of 85 pounds per square inch per inch (psi/in for standard 30-inch square bearing plate) may be used provided the mat foundation is underlain by the 3-foot-thick working platform consisting of crushed rock as recommended in Section A of this report. The subgrade reaction value should be scaled for the specific mat foundation size using the relationship $ks = k_p ((B + 1)/2B)^2$ where B = the minimum width of the mat (smallest dimension) in feet.

e. The mat slab should be at least 12 inches thick and capable of withstanding the anticipated uplift forces acting on the bottom of the slab of the living quarters once the construction dewatering has ceased. The actual depth, width, and reinforcement requirements for the mat foundation should be specified by the project Structural Engineer.

f. The Project Structural Engineer should account for the estimated static and seismic-induced settlements (total and differential) in the mat foundation design.

2. <u>Conventional Spread Foundations</u>

We understand that the temporary living quarters will be supported by conventional spread foundations underlain by a combination of compacted fill and a geogrid reinforced gravel raft as recommended in Section A of this report.

a. Conventional continuous footings and/or interior pad footings supported by compacted fill may be used to support the proposed temporary living quarters. It should be noted that if pad footings are to be used, they should be tied together by grade beams (each way) or by slabs because of the expansiveness of the soils.

b. Based on the expansion potential of the anticipated bearing soils, we recommend that perimeter and interior footings within the compacted fill should have a minimum embedment depth of 12 inches for one-story structures.

c. Footings should be embedded into recompacted fill as recommended elsewhere in this report. Foundation excavations should be observed by a representative of this firm after excavation, but prior to placing of reinforcing steel or concrete, to verify bearing conditions.

d. Conventional continuous footings with a minimum width of 15 inches may be designed based on an allowable bearing value of 2,000 psf. Conventional isolated pad footings with a minimum width of 24 inches may be designed based on an allowable bearing value of 2,400 psf. These values are based on a factor of safety of 3. These allowable bearing values are net (weight of footing and soil surcharge may be neglected) and are applicable for dead plus reasonable live loads.

e. A one-third increase in the allowable bearing values is permitted for use with the alternative load combinations given in Section 1806.1 of the 2022 CBC.

f. Foundations for proposed temporary living quarters should be designed to be structurally independent of the foundation system of the apparatus bay building. Or, if structurally connected to the apparatus bay building, the connection must be strong enough to resist stresses due to differential settlement. Joints between the walls of the structures should be designed to accommodate the estimated total and differential settlements.

g. Lateral loads may be resisted by soil friction on floor slabs and foundations and by passive resistance of the soils acting on foundation stem walls. Lateral capacity assumes that any required backfill adjacent to foundations and grade beams is properly compacted.

h. The information that follows regarding reinforcement and premoistening for footings is the same as that given in the Minimum Foundation Design Table for the “Very Low” expansion range. Actual footing designs should be provided by the project Structural Engineer, but the dimensions and reinforcement recommended should not be less than the criteria set forth in the Minimum Foundation Design Table for the appropriate expansion range.

i. Continuous footings bottomed in soils in the “Very Low” expansion range should be reinforced, at a minimum, with two No. 4 bars along the bottom and two No. 4 bars along the top. When other requirements of this report exceed those of the table, the report’s requirements will govern. However, when the requirements of the Structural Engineer exceed those of this report, the Structural Engineer’s requirements will govern.

j. Bearing soils in the “Very Low” expansion range should be lightly moistened prior to placing concrete. Testing of premoistening is not required.

3. Exterior Slabs-on-Grade
   a. Exterior concrete slabs should be supported by compacted structural fill as recommended elsewhere in this report.
   b. It is recommended that perimeter slabs (walks, patios, etc.) be designed relatively independent of footing stems (i.e. free floating) so foundation adjustment will be less likely to cause cracking.
   c. Slab designs should be provided by the Structural Engineer, but the reinforcement and thicknesses of sand should not be less than the criteria set forth in Table 1809.7 for the "Very Low" expansion range.
   d. Soils should be lightly moistened prior to placing concrete. Testing of premoistening is not required.

4. Frictional and Lateral Coefficients
   a. Resistance to lateral loading may be provided by friction acting on the base of foundations bearing on compacted fill. A coefficient of friction of 0.60 may be applied to dead load forces. This value does not include a factor of safety.
   b. Passive resistance acting on the sides of foundation stems in compacted fill equal to 395 pcf of equivalent fluid weight may be included for resistance to lateral load. This value does not include a factor of safety.
   c. A minimum factor of safety of 1.5 should be used when designing for sliding or overturning.
   d. Passive resistance may be combined with frictional resistance provided that a one-third reduction in the coefficient of friction is used.

5. Settlement Considerations
   a. In order to keep the maximum static settlement for the mat foundation of the apparatus bay to about one inch (1"), the mat foundation should be designed for a bearing pressure of 600 psf uniformly distributed over the full footprint of the mat foundation.
   b. If the preliminary recommendations for the design and construction of conventional spread foundations are followed, the maximum static settlement of the proposed temporary living quarters underlain by at

least 7 feet of compacted fill should not exceed one quarter of an inch (1/4”).

c. The maximum total seismic-induced settlement (i.e., liquefaction and dry sands) with the recommended remedial grading is estimated to be about 3.5 inches.

d. If the proposed conventional spread foundation system of the temporary living quarters is structurally connected to the apparatus bay building foundation, the connection must be strong enough to resist stresses for a differential settlement of three quarters of an inch (3/4”). This assumes the seismic-induced settlement at the connection will be the same.

e. With the geogrid reinforced gravel raft beneath the proposed interim fire station, differential settlement between adjacent load bearing members should be between one-third to one half of the estimated total settlement (i.e., static and seismic-induced). Therefore, we recommend that the mat foundation of the apparatus bay building should be designed for a total differential settlement of 2 inches over a horizontal distance of 40 feet (0.0042L). The conventional spread foundation system of the temporary living quarters should be designed for a total differential settlement of 1.4 inches over a horizontal distance of 30 feet (0.0039L).

f. The Project Structural Engineer will need to design the foundation system of the proposed apparatus bay and temporary living quarters to accommodate the potential total and differential settlement values described above. Due to the estimated total and differential settlements for the proposed temporary living quarters, additional grade beams may be needed to stiffen the foundation system.

6. <u>Retaining Walls</u>

a. The walls of the basement level beneath the living quarters should be designed for an at-rest earth pressure equal to an equivalent fluid weight 62 pcf, for well-drained, level backfill.

b. The equivalent fluid weights listed assume that backfill consisting of processed on-site soils will be compacted to 90% of the maximum dry density as determined by the ASTM D 1557 Test Method.

c. Walls retaining more than 6 feet of soil will need to be designed for a seismic loading force that is applied in addition to the static forces when seismic shaking occurs. A seismic increment of earth pressure equal to 38 pcf of additional equivalent fluid weight needs to be considered for the portion of the restrained walls above the groundwater level. An additional equivalent fluid weight of 27 pcf should be used for the portion of the restrained walls below the groundwater level. For the purpose of this report, we recommend that below-grade structures be designed for long-term conditions assuming groundwater is at a depth of 4 feet below the existing ground surface. These pressure increments have been determined by a procedure presented by Al Atik and Sitar (2010). The seismic increments of pressure can be assumed to be distributed so that the centroid of pressure acts at 0.33H above the base of a retaining wall, where H is the wall height in feet. Because a seismic force is transient, and in accordance with CBC Section 1807.2.3, a minimum factor of safety of 1.1 may be used for sliding and overturning when seismic loads are included.

d. The lateral earth pressure to be resisted by the retaining walls or similar structures should also be increased to allow for any other applicable surcharge loads. The surcharges considered should include forces generated by any structures or temporary loads that would influence the wall design. The coefficient to apply to uniform surface loads is 0.35.

e. Because the subterranean structures will be designed for hydrostatic pressure, a system of backfill drainage will not need to be incorporated into wall designs. Waterproofing should be provided to reduce the potential for efflorescence on the faces of permanent walls.

f. Compaction on the uphill sides of walls within a horizontal distance equal to one wall height should be performed by hand-operated or another lightweight compaction equipment. This is intended to reduce potential "locked-in" lateral pressures caused by compaction with heavy grading equipment.

g. Water should not be allowed to pond near the tops of retaining walls. To accomplish this, final backfill site grades should be such that all water is diverted away from retaining walls.

6. Preliminary Asphalt Pavement Sections
   a. A sample of the anticipated subgrade soils was tested to determine its R-value. The test yielded an R-value of 53. The intent of this report is to provide preliminary paving sections for planning and rough grading purposes. When grading is performed, it may be necessary to re-sample and test for R-values of the actual subgrades so that final paving designs and their approximate limits can be developed.
   b. Preliminary asphalt pavement sections for a 20-year design-life using untreated subgrade soils are presented below based on an R-value of 50, current Caltrans and Ventura County design procedures, and traffic indices ranging from 4.5 to 7.0 for vehicular and fire truck traffic.

TRAFFIC INDEX	ASPHALT-CONCRETE (Inches)	AGGREGATE BASE (Inches)
4.5	3.0	4.0
5.0	3.0	4.0
5.5	3.0	4.0
6.0	4.0	4.0
6.5	4.0	4.0
7.0	5.0	4.0

   c. The preliminary paving sections provided above have been designed for the type of traffic indicated. If the pavement is placed before construction on the project is complete, construction loads, which could increase the traffic index values assumed above, should be considered.
   d. The subgrade soils in the upper 12 inches below the finished subgrade elevation should be properly moisture conditioned to above the optimum moisture content and compacted to achieve a minimum relative compaction of 95% of the Caltrans Test Method 216 maximum density. The subgrade soils should be in a stable, non-pumping condition at the time the aggregate base material is placed and compacted.
   e. Aggregate base materials should Caltrans Class 2 Aggregate Base. Asphalt paving materials and placement methods should meet specifications stated in the CalTrans Standard Specifications standards

for asphalt concrete and be compacted to a minimum of 95% of maximum density determined by Caltrans Test Method 216.

f. Curb and gutter construction should be according to Caltrans Standard Plans. A minimum of 4 inches of aggregate base is recommended under curbs and gutters and should extend to 12 inches behind the curb.

g. Design and construction on the project site should comply with Caltrans guidelines.

h. Adequate drainage (both surface and subsurface) should be provided such that the subgrade soils and aggregate base materials are not allowed to become continuously wet.

7. Preliminary Concrete Paving Sections

a. For rigid pavements in heavy traffic driveways and access lanes, the following minimum criteria may be used for design:

Concrete thickness (parking area and interior lanes) =	5.75 inches
Concrete thickness (entrance and exterior lanes) =	6.75 inches
PMB or Class II base thickness under concrete =	4.0 inches
Compressive strength of concrete, fc =	4,000 psi at 28 days
Modulus of flexural strength of 4,000 psi concrete =	595 psi
Maximum spacing of contraction joints, each way =	15 feet

b. If additional resistance to cracking is desired beyond that provided by the contraction joints, steel reinforcement can be added to the pavement section at approximately 2 inches below the top of concrete; however, reinforcement is not required.

c. The preliminary paving sections discussed above have been designed for the type of traffic indicated. If the pavement is placed before construction on the project is complete, construction loads should be taken into account. Traffic should not be allowed on the pavement until 28 days after concrete placement, or until the 28-day design strength is achieved.

ADDITIONAL SERVICES

This report is based on the assumption that an adequate program of monitoring and testing will be performed by Earth Systems during construction to check compliance with the recommendations given in this report. The recommended tests and observations include, but are not necessarily limited to the following:

1. Review of the building and grading plans during the design phase of the project.
2. Observation and testing during site preparation, grading, placing of engineered fill, and foundation construction.
3. Consultation as required during construction.

LIMITATIONS AND UNIFORMITY OF CONDITIONS

The analysis and recommendations submitted in this report are based in part upon the data obtained from the borings and CPT soundings advanced on the site during earlier site studies. The nature and extent of variations between and beyond the borings and soundings may not become evident until construction. If variations then appear evident, it will be necessary to reevaluate the recommendations of this report.

The scope of services did not include any environmental assessment or investigation for the presence or absence of wetlands, hazardous or toxic materials in the soil, surface water, groundwater or air, on, below, or around this site. Any statements in this report or on the soil boring logs regarding odors noted, unusual or suspicious items or conditions observed, are strictly for the information of the client.

Findings of this report are valid as of this date; however, changes in conditions of a property can occur with passage of time whether they be due to natural processes or works of man on this or adjacent properties. In addition, changes in applicable or appropriate standards may occur whether they result from legislation or broadening of knowledge. Accordingly, findings of this report may be invalidated wholly or partially by changes outside the control of this firm. Therefore, this report is subject to review and should not be relied upon after a period of one year.

In the event that any changes in the nature, design, or location of the structure(s) and other improvements are planned, the conclusions and recommendations contained in this report shall not be considered valid unless the changes are reviewed, and conclusions of this report modified or verified in writing.

This report is issued with the understanding that it is the responsibility of the Owner, or of his representative to ensure that the information and recommendations contained herein are called to the attention of the Architect and Engineers for the project and incorporated into the plan and that the necessary steps are taken to see that the Contractor and Subcontractors carry out such recommendations in the field.

As the Geotechnical Engineers for this project, Earth Systems has striven to provide services in accordance with generally accepted geotechnical engineering practices in this community at this time. No warranty or guarantee is expressed or implied. This report was prepared for the exclusive use of the Client for the purposes stated in this document for the referenced project only. No third party may use or rely on this report without express written authorization from Earth Systems for such use or reliance.

It is recommended that Earth Systems be provided the opportunity for a general review of final design and specifications in order that earthwork and foundation recommendations may be properly interpreted and implemented in the design and specifications. If Earth Systems is not accorded the privilege of making this recommended review, it can assume no responsibility for misinterpretation of the recommendations.

GENERAL BIBLIOGRAPHY

American Concrete Institute (ACI), 2009, ACI 318-19.

California Building Standards Commission, 2022, California Building Code, California Code of Regulations Title 24.

California Division of Mines and Geology (C.D.M.G.), 1972 (Revised 2018), Fault Rupture Hazard Zones in California, Special Publication 42.

C.D.M.G., 1975, Seismic Hazards Study of Ventura County, California, Open File Report 76-5-LA.

California Geological Survey (C.G.S.), 2002a, Seismic Hazard Zone Report for the Ventura 7.5-Minute Quadrangle, Ventura County, California, Seismic Hazard Zone Report 052.

C.G.S., 2002b, State of California Seismic Hazard Zones, Ventura Quadrangle, Official Map, December 20, 2022.

C.G.S., 2008, Guidelines for Evaluating and Mitigating Seismic Hazards in California, Special Publication 117A.

County of Los Angeles Department of Public Works, July 2013, Manual for Preparation of Geotechnical Reports.

Crowell, John C., 1975, San Andreas Fault in Southern California, C.D.M.G. Special Report 118.

Federal Emergency Management Agency (FEMA), 2024, FEMA Flood Map Service Center Website.

Fugro USA Land, Inc., 2023, Geotechnical Engineering Report, Ventura Fire Station No. 7, March 13.

Jennings, C.W. and W.A. Bryant, 2010, Fault Activity Map of California, C.G.S. Geologic Data Map No. 6.

Leighton and Associates, Inc., 1990, Technical Appendix to the Safety Element of the Los Angeles County General Plan, Hazard Reduction in Los Angeles County.

NCEER, 1997, Proceedings of the NCEER Workshop on Evaluation of Liquefaction Resistance of Soils, Technical Report NCEER-97-0022.

Sieh, Kerry E., 1978, Earthquake Intervals, San Andreas Fault, Palmdale, California, C.D.M.G.. California Geology, June 1978.

Southern California Earthquake Center (SCEC), 1999, Recommended Procedures for Implementation of DMG Special Publication 117, Guidelines for Analyzing and Mitigating Liquefaction in California.

Ventura County Planning Department, October 22, 2013, Ventura County General Plan Hazards Appendix.

Weber, F. Harold, Jr. and others, 1973, Geology and Mineral Resources of Southern Ventura County, California, C.D.M.G., Preliminary Report 14.

APPENDIX A

Vicinity Map
Regional Fault Map
Regional Geologic Map
Seismic Hazard Zones Map
Historical High Groundwater Map
Field Study
Site Plan
Geologic Cross Section
CPT Logs
CPT Interpretations
Boring Logs
Boring Log Symbols
Unified Soil Classification System

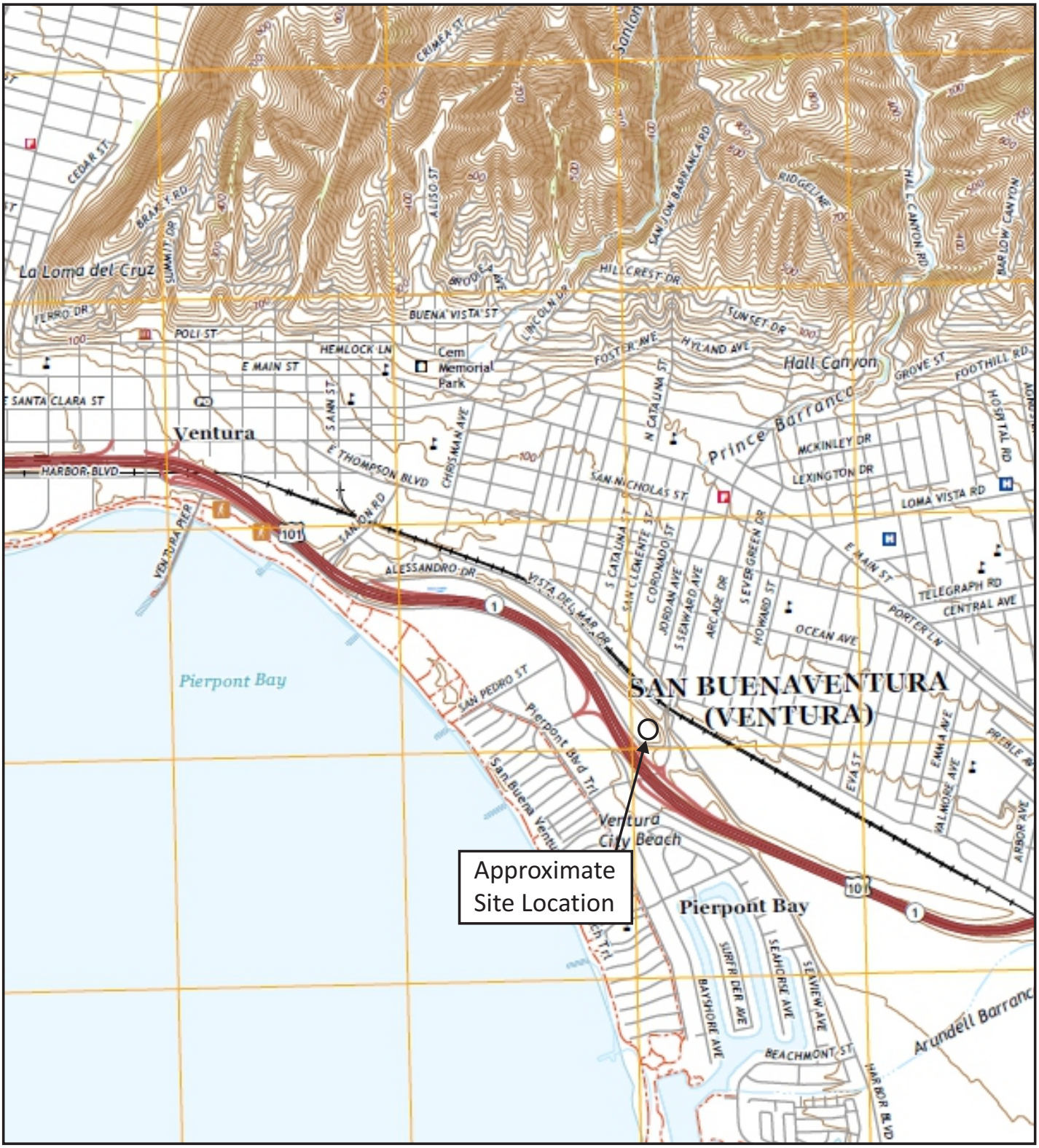

*Taken from USGS Topo Map, Ventura Quadrangle, California, 2022.

Approximate Scale: 1" = 2,000'

0 2,000' 4,000'

N

VICINITY MAP

Fire Station 7
Ventura, California

Earth Systems

August 2024	306642-001

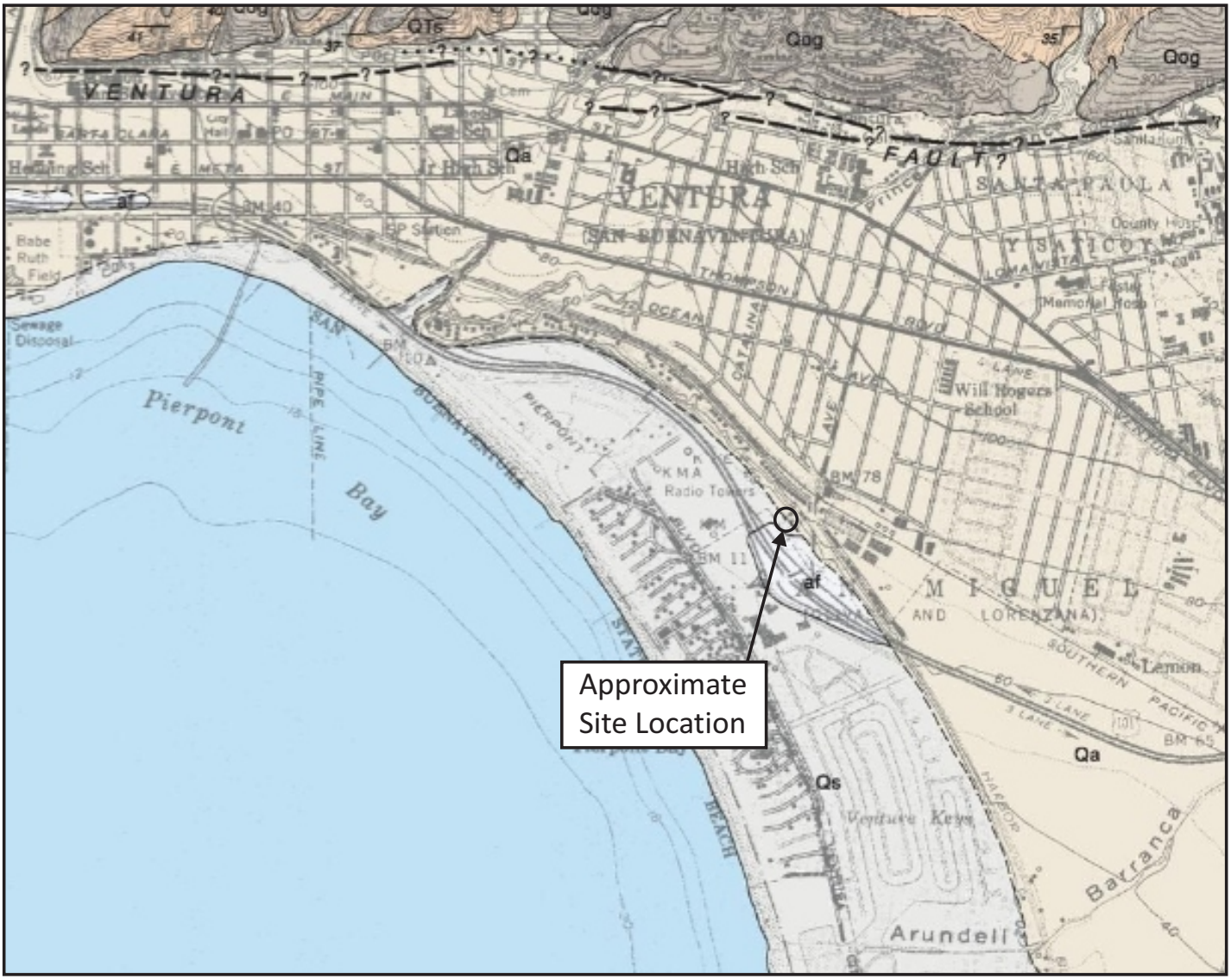

*Taken from Dibblee, Jr., Geologic Map of The Ventura & Pitas Point Quadrangles, Ventura County, California, 1988, DF-21.

GEOLOGIC SYMBOLS

not all symbols shown on each map

FORMATION CONTACT *dashed where inferred or indefinite dotted where concealed*

MEMBER CONTACT *between units of a formation* ..... **Prominent bed**

CONTACT BETWEEN SURFICIAL SEDIMENTS *located only approximately in places*

FAULT: *Dashed where indefinite or inferred, dotted where concealed, queried where existence is doubtful. Parallel arrows indicate inferred relative lateral movement. Relative vertical movement is shown by U/D (U=upthrown side, D=downthrown side). Short arrow indicates dip of fault plane. Sawteeth are on upper plate of low angle thrust fault.* U D 25 ?

FOLDS: *overturned* **ANTICLINE** **SYNCLINE**

arrow on axial trace of fold indicates direction of plunge; dotted where concealed by surficial sediments

Strike and dip of sedimentary rocks — 18 *inclined*; 20 *inclined (approximate)*; 80 *overturned*; *horizontal*; *vertical*

Strike and dip of metamorphic or igneous rock foliation or flow banding or compositional layers — 75 *inclined*; *inclined (approximate)*; *vertical*; 80 *overturned*

OTHER SYMBOLS: *Direction of landslide movement*; *outline of water bodies shown on map*; *water well*; *oil well*; *springs*

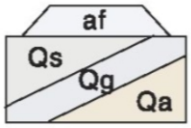

SURFICIAL SEDIMENTS

af *Artificial fill*
Qs *Beach sand deposits*
Qg *Stream channel deposits of gravel, sand and silt*
Qa *Alluvium; unconsolidated floodplain deposits of silt, sand and gravel*

N

Approximate Scale: 1" = 2,000'

0 2,000' 4,000'

REGIONAL GEOLOGIC MAP 1

Fire Station 7
Ventura, California

Earth Systems

August 2024	306642-001

*Taken from USGS, SCAMP Geologic Map of the Ventura 7.5' Quadrangle, Ventura County, California, 2003.

MAP SYMBOLS

Contact between map units; generally approximately located or inferred; dotted where concealed.

Fault; approximately located or inferred, querried where location is uncertain; dotted where concealed.

Landslide; arrow indicates principal direction of movement, querried where existence is questionable (some geologic features are drawn within questionable landslides); hachured where headscarp is mappable.

Strike and dip of bedding.

Axis of anticline; dotted where concealed; arrow indicates direction of plunge.

Axis of syncline; dotted where concealed.

af	Artifical fill material
Qb	Active beach deposits
Qhpr-s	Holocene paralic deposits of the Sea Cliff marine terrace 1800 to 5800 years old (Lajoie, and others, 1982); composed of semiconsolidated sandy clay with some gravel.

N

Approximate Scale: 1" = 2,000'

0 2,000' 4,000'

REGIONAL GEOLOGIC MAP 2

Fire Station 7
Ventura, California

Earth Systems

August 2024	306642-001

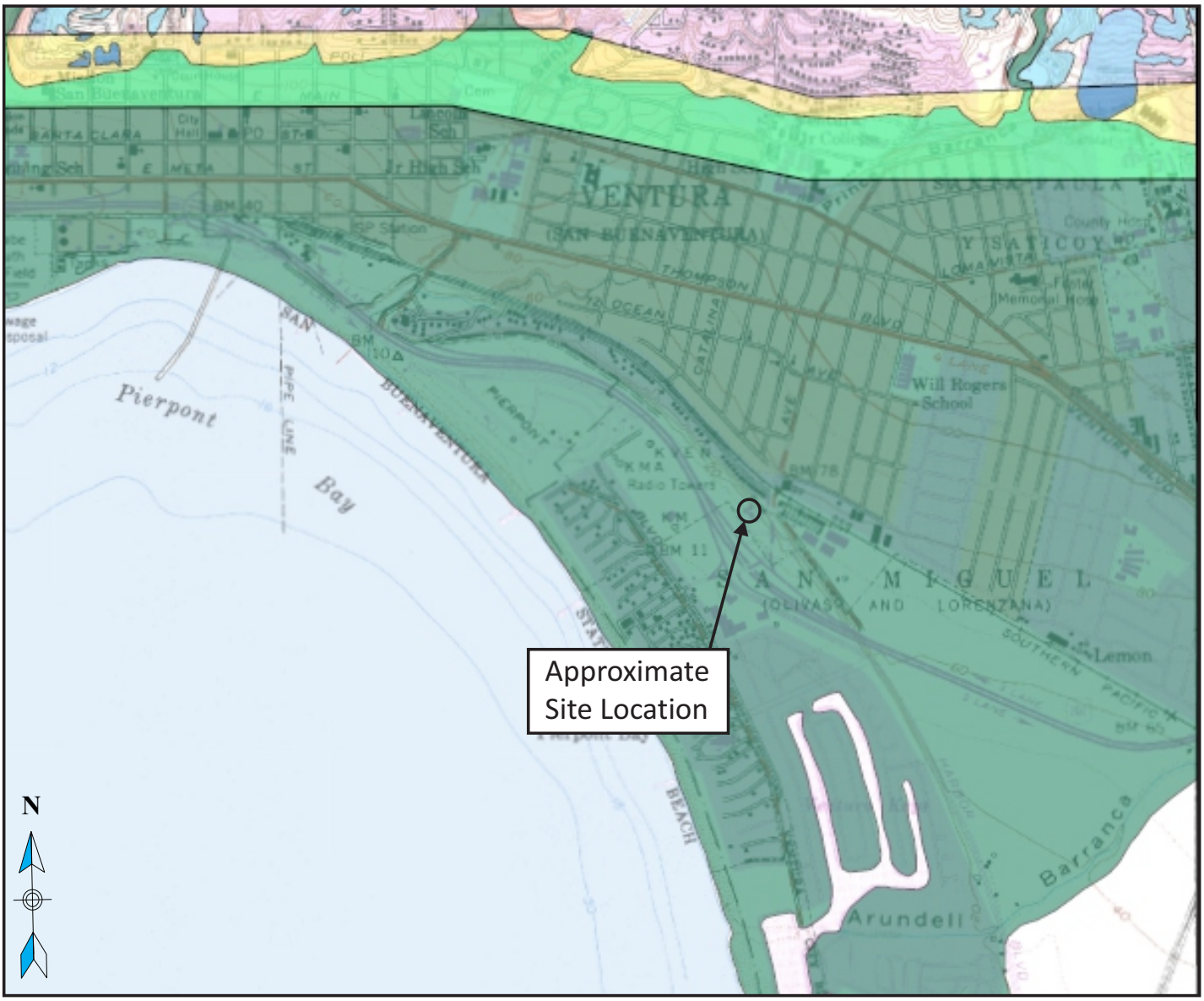

Overlap of Earthquake Fault Zone and Liquefaction Zone
Areas that are covered by both Earthquake Fault Zone and Liquefaction Zone.

Overlap of Earthquake Fault Zone and Earthquake-Induced Landslide Zone
Areas that are covered by both Earthquake Fault Zone and Earthquake-Induced Landslide Zone.

Liquefaction Zones
Areas where historical occurrence of liquefaction, or local geological, geotechnical and ground water conditions indicate a potential for permanent ground displacements such that mitigation as defined in Public Resources Code Section 2693(c) would be required.

Earthquake-Induced Landslide Zones
Areas where previous occurrence of landslide movement, or local topographic, geological, geotechnical and subsurface water conditions indicate a potential for permanent ground displacements such that mitigation as defined in Public Resources Code Section 2693(c) would be required.

Earthquake Fault Zones
Zone boundaries are delineated by straight-line segments; the boundaries define the zone encompassing active faults that constitute a potential hazard to structures from surface faulting or fault creep such that avoidance as described in Public Resources Code Section 2621.5(a) would be required.

Note: Mitigation methods differ for each zone – AP Act only allows avoidance; Seismic Hazard Mapping Act allows mitigation by engineering/geotechnical design as well as avoidance.

Approximate Scale: 1" = 2,000'

0 2,000' 4,000'

VENTURA QUADRANGLE

EARTHQUAKE FAULT ZONES

Delineated in compliance with
Chapter 7.5 Division 2 of the California Public Resources Code
(Alquist-Priolo Earthquake Fault Zoning Act)

OFFICIAL MAP

Released: July 26, 1978

STATE GEOLOGIST

SEISMIC HAZARD ZONES

Delineated in compliance with
Chapter 7.8 Division 2 of the California Public Resources Code
(Seismic Hazards Mapping Act)

OFFICIAL MAP

Released: July 2, 2003

STATE GEOLOGIST

SEISMIC HAZARD ZONES MAP

Fire Station 7
Ventura, California

Earth Systems

August 2024	306642-001

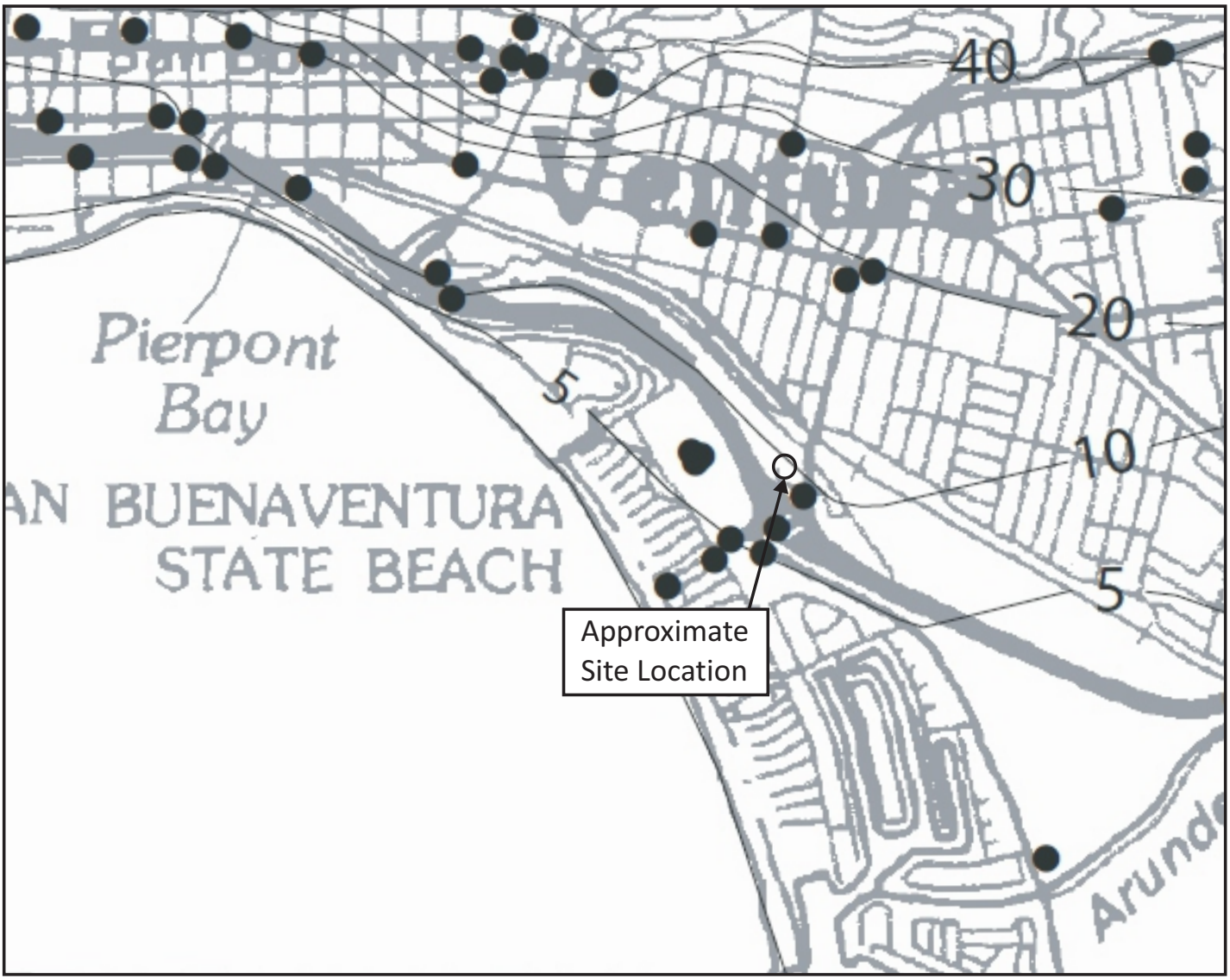

*Taken from CGS, Seismic Hazard Zone Report For The Ventura 7.5-Minute Quadrangle, Ventura County, California, 2003.

20 — Historically shallowest ground-water depth contours (in feet)

>40 — Historically shallowest ground-water depth greater than 40 feet over a broad area

<10 — Historically shallowest ground-water depth less than 10 feet over a broad area

Alluviated Valley Boundary

Geotechnical borings used in liquefaction evaluation

N

Approximate Scale: 1" = 2,000'

0 2,000' 4,000'

HISTORICAL HIGH GROUNDWATER MAP

Fire Station 7
Ventura, California

Earth Systems

August 2024	306642-001

FIELD STUDY

A. On May 6, 2024, four cone penetration tests soundings were performed to obtain information pertaining to the soil profile. The CPT soundings were performed using equipment owned and operated by Kehoe Testing and Engineering. During advancement of the cone penetrometer, readings of sleeve friction (in tons per square foot), tip resistance (also in tons per square foot), and friction ratio (in percent) were recorded at 0.05-meter intervals as per ASTM D 5778 and ASTM D 3441. The approximate locations of the test soundings were determined in the field by pacing and sighting and are shown on the Site Plan in this Appendix.

B. On May 8, 2024, two test borings were drilled to depths of 51.5 and 61.5 feet below the existing ground surface to observe the soil profile and to obtain samples for laboratory analysis. On June 26, 2024, one boring was drilled to the depth of 59 feet. The borings were drilled using a hollow stem auger/mud rotary powered by a truck mounted drilling rig. The approximate locations of the test borings were determined in the field by pacing and sighting and are shown on the Site Plan in this Appendix.

C. Samples were obtained in the test borings with a Modified California (M.C.) ring sampler (ASTM D 3550 with shoe similar to ASTM D 1586), and with a Standard Penetration Test (SPT) sampler (ASTM D 1586). The M.C. sampler has a 3-inch outside diameter, and a 2.42-inch inside diameter when used with brass ring liners (as it was during this study). The SPT sampler has a 2.00-inch outside diameter and a 1.37-inch inside diameter, but when used without liners, as was done for this project, the inside diameter is 1.63 inches. The samples were obtained from the borings by driving the sampler with a 140-pound automatic trip hammer dropping 30 inches in accordance with ASTM D 1586.

D. Bulk samples were gathered from the soils encountered in the upper 5 feet of borings B-1 and B-2.

E. The final logs of the test borings represent interpretations of the contents of the field logs and the results of laboratory testing performed on the samples obtained during the subsurface study. The final logs, as well as logs and interpretations of the CPT soundings, are included in this Appendix.

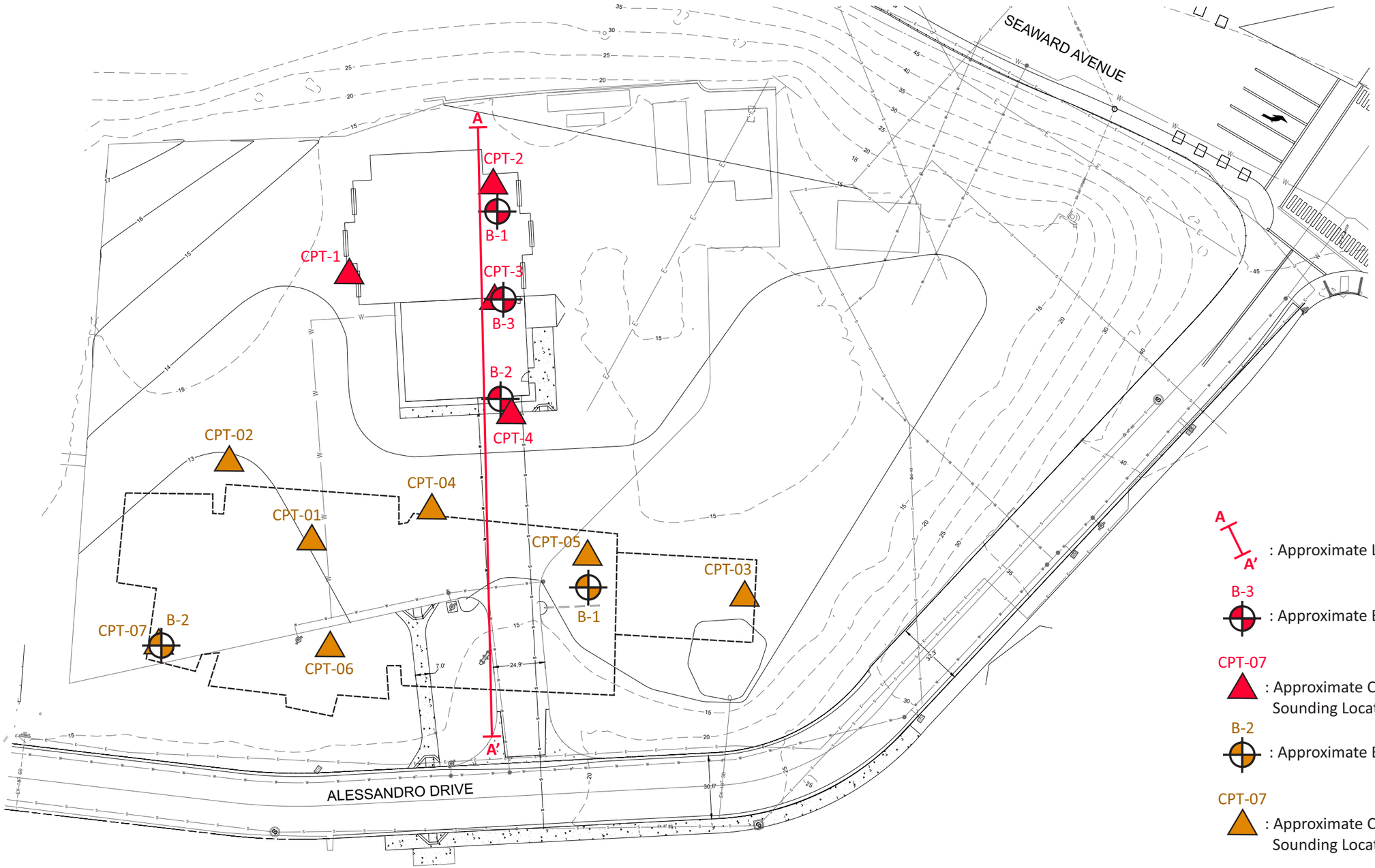

A A' : Approximate Location of Cross-Section

B-3 : Approximate Boring Location

CPT-07 : Approximate Cone Penetrometer Test (CPT) Sounding Location

B-2 : Approximate Boring Location (Fugro 2023)

CPT-07 : Approximate Cone Penetrometer Test (CPT) Sounding Location (Fugro 2023)

Approximate Scale: 1" = 50'

0 50' 100'

N

SITE PLAN

Fire Station 7
Ventura, California

Earth Systems

August 2024	306642-001

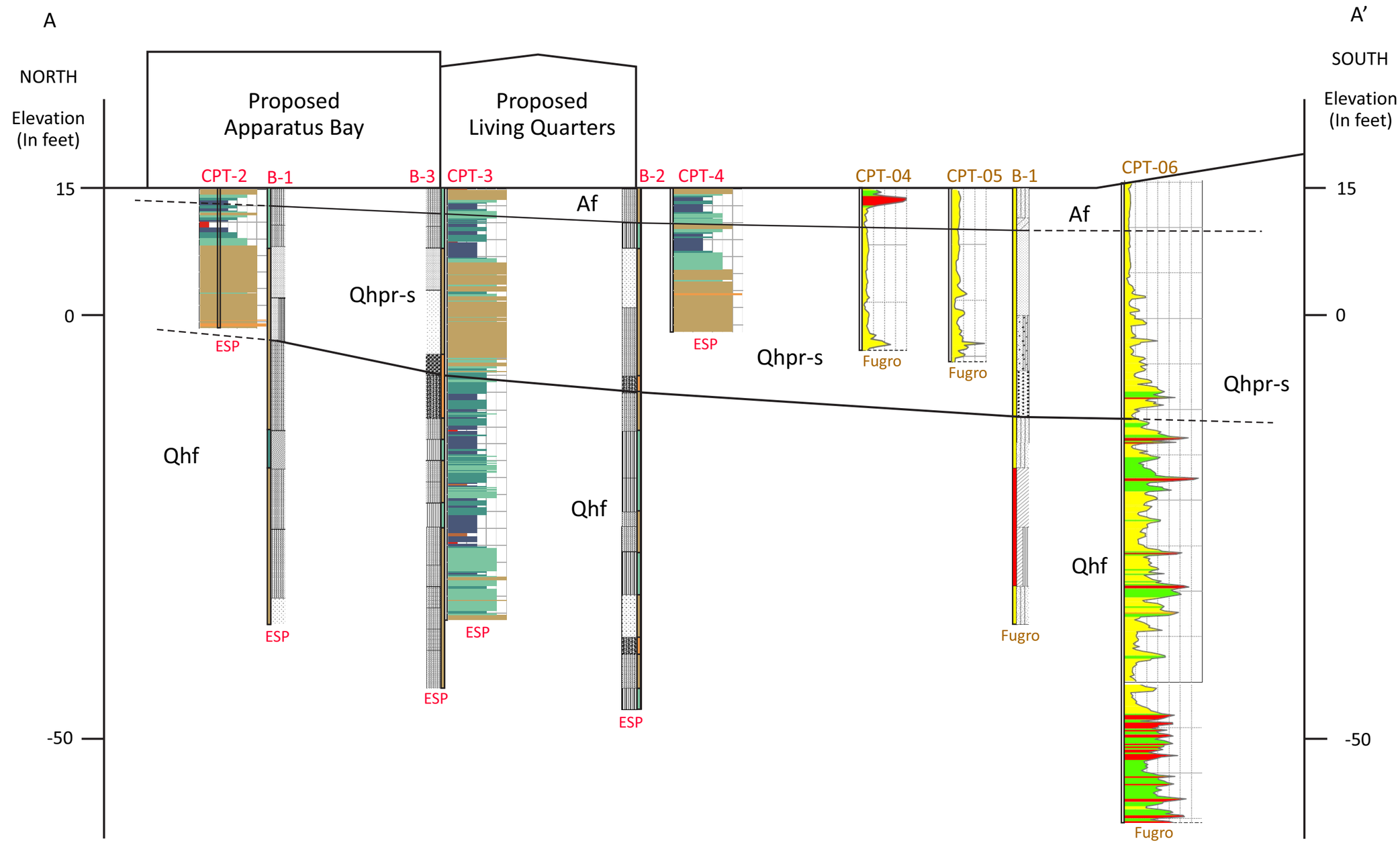

ESP *CPT Soil Behavior Type*

- Clay & Silty Clay
- Silty Sand & Sandy Silt
- Sand & Silty Sand
- Sand & Gravel

Fugro *CPT Soil Behavior Type*

- Silty Clay to Clay
- Clayey Silt to Silty Clay
- Sandy Silt/Sand/Gravel
- Very Stiff Fine-Grained Soils

Af: Artificial Fill

Qhpr-s: Marine Terrace Deposits

Qhf: Younger Alluvial Fan Deposits

12'

0

25'

Approximate Horizontal Scale: 1" = 25'
Approximate Vertical Scale: 1" = 12'

GEOLOGIC CROSS-SECTION A-A'

Fire Station 7
Ventura, California

Earth Systems

August 2024	306642-001

Earth Systems
Pacific

CPT No: CPT-1
Project Name: Fire Station No. 7
Project No.: 306642-001
Location: See Site Exploration Plan

CPT Vendor: **Kehoe**
Truck Mounted Electric
Cone with 23-ton reaction
Date: 5/6/2024

DEPTH (FEET)	Interpreted Soil Stratigraphy Robertson & Campanella ('89)	Density/Consistency
	Overconsolidated Soil	hard
	Silty Sand to Sandy Silt	medium dense
	Silty Clay to Clay	very stiff
	Sandy Silt to Clayey Silt	medium dense
5	Clayey Silt to Silty Clay	stiff
	Clayey Silt to Silty Clay	loose
	Silty Clay to Clay	firm
	Clay	soft
	Sandy Silt to Clayey Silt	loose
10	Sand to Silty Sand	medium dense
	Sand	dense
	Sand	dense
	Sand	dense
	Sand	dense
15	Sand	dense
	Sand	dense
	Gravelly Sand to Sand	dense
	Gravelly Sand to Sand	very dense
20		
25		
30		
35		
40		
45		
50		

End of Sounding @ 0.2 feet

Earth Systems Pacific

CONE PENETROMETER INTERPRETATION

(based on Robertson & Campanella, 1989)

Project: Fire Station No. 7 | Project No: 306642-001 | Date: 05/06/24

CPT SOUNDING: CPT-1 | Plot: 1 | Density: 1 SPT N | Program developed 2003 by Shelton L. Stringer, GE, Earth Systems Southwest

Est. GWT (feet): 4.0 | Dr correlation: 0 Baldi | Qc/N: 0 Jefferies & Davies | Phi Correlation: 4 SPT N

Nk: 17

Base Depth meters	Base Depth feet	Avg Tip Qc, tsf	Avg Friction Ratio, %	Soil Classification	USCS	Density or Consistency	Est. Density (pcf)	Qc to N	SPT N(60)	Total po tsf	p'o tsf	F	n	Cq	Norm. Qc1n	2.6 Ic	Clean Sand Qc1n	$N_{1(60)}$	Clean Sand $N_{1(60)}$	Rel. Dens. Dr (%)	Phi (deg.)	Su (tsf)	OCR
0.15	0.5	77.02	30.54	Overconsolidated Soil	??	hard	110	3.1	25	0.014	0.014	30.55	0.92	1.70	123.8	3.04		25				4.53	#####
0.30	1.0	136.59	0.83	Sand	SP	dense	120	5.9	23	0.043	0.043	0.83	0.50	1.70	219.5	1.60	219.5	40	44	100	38		
0.46	1.5	71.34	0.71	Sand to Silty Sand	SP/SM	medium dense	120	5.5	13	0.073	0.073	0.71	0.54	1.70	114.6	1.77	124.4	22	25	82	34		
0.61	2.0	47.56	1.32	Silty Sand to Sandy Silt	SM/ML	medium dense	120	4.9	10	0.103	0.103	1.32	0.63	1.70	76.4	2.08	108.1	16	22	66	32		
0.76	2.5	16.99	3.27	Clayey Silt to Silty Clay	ML/CL	stiff	120	3.8	5	0.133	0.133	3.30	0.81	1.70	27.3	2.68		5				0.99	38.2
0.91	3.0	24.48	3.97	Silty Clay to Clay	CL	very stiff	120	3.9	6	0.163	0.163	3.99	0.79	1.70	39.3	2.61		6				1.43	44.9
1.07	3.5	63.53	1.89	Silty Sand to Sandy Silt	SM/ML	medium dense	120	4.9	13	0.193	0.193	1.89	0.64	1.70	102.1	2.09	147.1	22	29	78	34		
1.22	4.0	28.63	2.44	Sandy Silt to Clayey Silt	ML	medium dense	120	4.3	7	0.223	0.223	2.46	0.73	1.70	46.0	2.42	110.3	11	22	45	30		
1.37	4.5	8.57	3.25	Silty Clay to Clay	CL	firm	120	3.3	3	0.253	0.237	3.35	0.88	1.70	13.8	2.91		3				0.49	10.5
1.52	5.0	12.06	1.59	Clayey Silt to Silty Clay	ML/CL	stiff	120	3.9	3	0.283	0.251	1.63	0.79	1.70	19.4	2.61		3				0.69	14.1
1.68	5.5	18.63	1.54	Sandy Silt to Clayey Silt	ML	loose	120	4.2	4	0.313	0.266	1.57	0.74	1.70	29.9	2.44	75.0	8	15	27	29		
1.83	6.0	12.05	2.87	Clayey Silt to Silty Clay	ML/CL	stiff	120	3.6	3	0.343	0.280	2.95	0.84	1.70	19.4	2.76		3				0.69	12.5
1.98	6.5	9.73	2.06	Clayey Silt to Silty Clay	ML/CL	stiff	120	3.6	3	0.373	0.295	2.14	0.84	1.70	15.6	2.75		3				0.55	9.5
2.13	7.0	3.14	3.12	Clay	CL/CH	soft	120	2.6	1	0.403	0.309	3.57	1.00	1.70	5.0	3.29		1				0.17	2.7
2.29	7.5	3.55	2.85	Clay	CL/CH	soft	120	2.7	1	0.433	0.323	3.25	0.98	1.70	5.7	3.22		1				0.19	2.9
2.44	8.0	5.38	3.73	Clay	CL/CH	firm	120	2.9	2	0.463	0.338	4.08	0.95	1.70	8.6	3.13		2				0.30	4.4
2.59	8.5	14.25	1.96	Clayey Silt to Silty Clay	ML/CL	stiff	120	3.9	4	0.493	0.352	2.03	0.79	1.70	22.9	2.61		4				0.82	11.7
2.74	9.0	31.26	0.57	Silty Sand to Sandy Silt	SM/ML	medium dense	120	5.0	6	0.523	0.367	0.58	0.62	1.70	50.2	2.02	66.8	10	13	48	30		
2.90	9.5	51.34	1.06	Silty Sand to Sandy Silt	SM/ML	medium dense	120	5.1	10	0.553	0.381	1.07	0.61	1.70	82.5	1.99	106.7	16	21	69	32		
3.05	10.0	97.51	0.52	Sand	SP	medium dense	120	5.9	17	0.583	0.395	0.53	0.50	1.64	150.8	1.60	150.8	26	30	94	35		
3.20	10.5	122.43	0.43	Sand	SP	dense	120	6.1	20	0.613	0.410	0.43	0.50	1.61	186.0	1.48	186.0	31	37	100	36		
3.35	11.0	142.60	0.47	Sand	SP	dense	120	6.2	23	0.643	0.424	0.47	0.50	1.58	212.9	1.45	212.9	36	43	100	37		
3.51	11.5	165.60	0.44	Sand	SP	dense	120	6.3	26	0.673	0.439	0.44	0.50	1.55	243.1	1.39	243.1	40	49	100	38		
3.66	12.0	194.67	0.61	Sand	SP	dense	120	6.2	31	0.703	0.453	0.61	0.50	1.53	281.2	1.43	281.2	47	56	100	40		
3.81	12.5	190.90	0.51	Sand	SP	dense	120	6.3	30	0.733	0.467	0.51	0.50	1.50	271.5	1.39	271.5	45	54	100	39		
3.96	13.0	136.50	0.44	Sand	SP	dense	120	6.1	22	0.763	0.482	0.44	0.50	1.48	191.2	1.47	191.2	32	38	100	37		
4.11	13.5	122.64	0.37	Sand	SP	medium dense	120	6.1	20	0.793	0.496	0.37	0.50	1.46	169.3	1.47	169.3	28	34	99	36		
4.27	14.0	138.17	0.40	Sand	SP	dense	120	6.2	22	0.823	0.511	0.40	0.50	1.44	188.0	1.45	188.0	31	38	100	36		
4.42	14.5	170.42	0.40	Sand	SP	dense	120	6.3	27	0.853	0.525	0.40	0.50	1.42	228.7	1.38	228.7	37	46	100	38		
4.57	15.0	202.05	0.35	Sand	SP	dense	120	6.5	31	0.883	0.539	0.35	0.50	1.40	267.5	1.29	267.5	43	53	100	39		
4.72	15.5	199.57	0.39	Sand	SP	dense	120	6.4	31	0.913	0.554	0.39	0.50	1.38	260.7	1.33	260.7	42	52	100	39		
4.88	16.0	197.96	0.38	Sand	SP	dense	120	6.4	31	0.943	0.568	0.38	0.50	1.36	255.3	1.33	255.3	41	51	100	39		
5.03	16.5	240.23	0.27	Gravelly Sand to Sand	SW	dense	120	6.7	36	0.973	0.583	0.28	0.50	1.35	306.0	1.19	306.0	47	61	100	40		
5.18	17.0	260.47	0.36	Gravelly Sand to Sand	SW	very dense	120	6.6	40	1.003	0.597	0.36	0.50	1.33	327.8	1.23	327.8	51	66	100	41		
5.33	17.5	336.66	0.49	Gravelly Sand to Sand	SW	very dense	120	6.6	51	1.033	0.611	0.49	0.50	1.32	418.6	1.25	418.6	66	84	100	43		
5.49	18.0	656.81	0.37	Gravelly Sand to Sand	SW	very dense	120	7.1	93	1.063	0.626	0.37	0.50	1.30	807.3	0.97	807.3	117	161	100	49		
5.64	18.5	734.10	0.29	Gravelly Sand to Sand	SW	very dense	120	7.3	100	1.093	0.640	0.29	0.50	1.29	892.0	0.86	892.0	126	178	100	49		

Earth Systems
Pacific

CPT No: CPT-2
Project Name: Fire Station No. 7
Project No.: 306642-001
Location: See Site Exploration Plan

CPT Vendor: Kehoe
Truck Mounted Electric
Cone with 23-ton reaction
Date: 5/6/2024

DEPTH (FEET)	Interpreted Soil Stratigraphy Robertson & Campanella ('89)	Density/Consistency
	Sand to Silty Sand	dense
	Clayey Silt to Silty Clay	medium dense
	Sandy Silt to Clayey Silt	loose
	Sandy Silt to Clayey Silt	loose
5	Sensitive fine grained	soft
	Sensitive fine grained	firm
	Silty Sand to Sandy Silt	medium dense
	Sand to Silty Sand	medium dense
	Sand	medium dense
10	Sand	dense
	Sand	dense
	Sand	dense
	Sand	dense
	Sand	dense
15	Sand	dense
	Gravelly Sand to Sand	very dense
	Gravelly Sand to Sand	very dense
20		
25		
30		
35		
40		
45		
50		

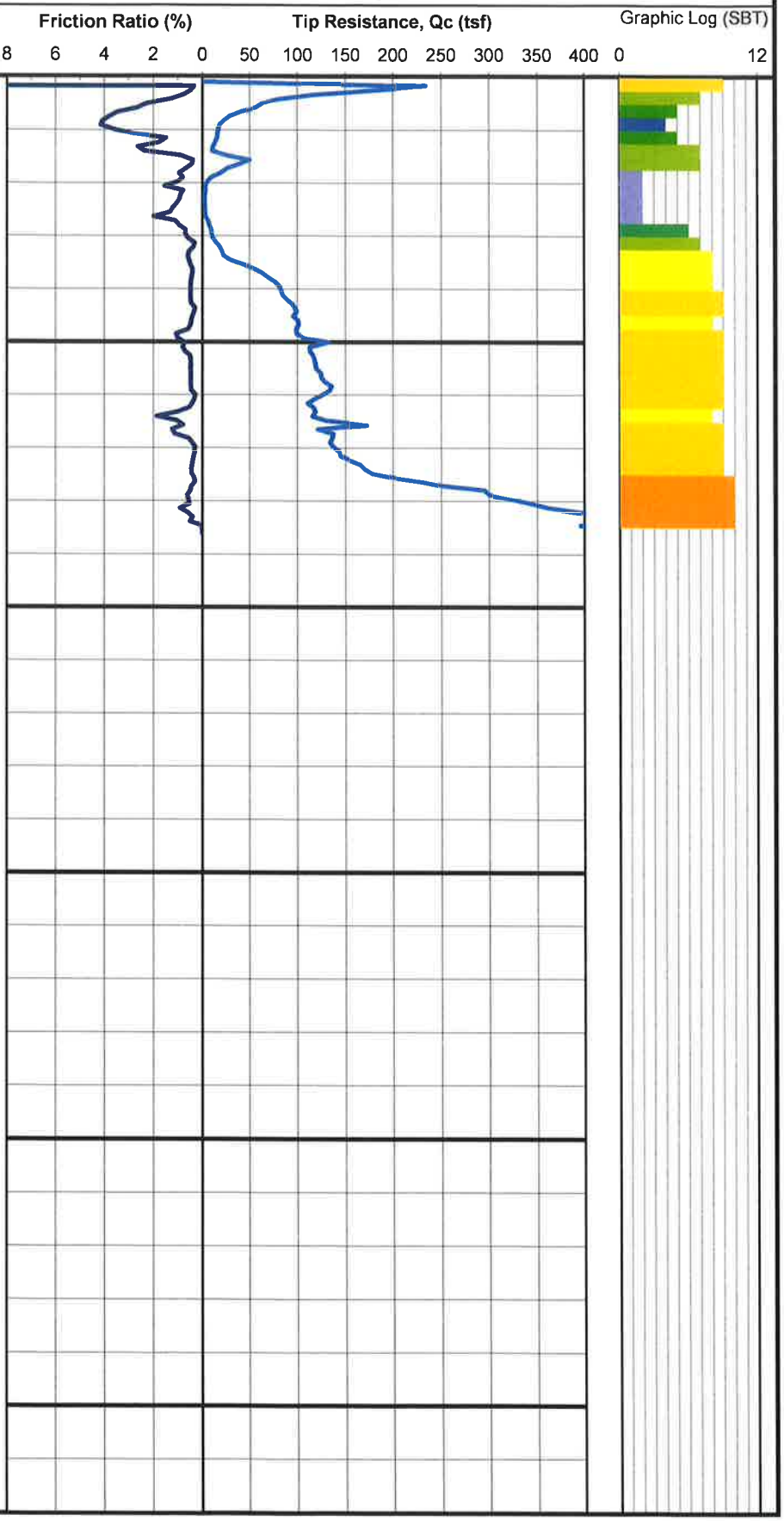

End of Sounding @ 17.4 feet

Earth Systems Pacific

CONE PENETROMETER INTERPRETATION

(based on Robertson & Campanella, 1989)

Project: Fire Station No. 7 | Project No: 306642-001 | Date: 05/06/24

CPT SOUNDING: CPT-2 | Plot: 2 | Density: 1 SPT N | Program developed 2003 by Shelton L. Stringer, GE, Earth Systems Southwest

Est. GWT (feet): 4.0 | Dr correlation: 0 Baldi | Qc/N: 0 Jefferies & Davies | Phi Correlation: 4 SPT N

Base Depth meters	Base Depth feet	Avg Tip Qc, tsf	Avg Friction Ratio, %	Soil Classification	USCS	Density or Consistency	Est. Density (pcf)	Qc to N	SPT N(60)	Total po tsf	p'o tsf	F	n	Cq	Norm. Qc1n	2.6 Ic	Clean Sand Qc1n	$N_{1(60)}$	Clean Sand $N_{1(60)}$	Rel. Dens. Dr (%)	Phi (deg.)	Nk: 17 Su (tsf)	OCR
0.15	0.5	175.45	0.54	Sand	SP	dense	100	6.3	28	0.013	0.013	0.54	0.50	1.70	281.9	1.39	281.9	48	56	100	40		
0.30	1.0	66.72	2.07	Silty Sand to Sandy Silt	SM/ML	medium dense	120	4.9	14	0.040	0.040	2.07	0.64	1.70	107.2	2.11	157.0	23	31	80	34		
0.46	1.5	30.81	3.78	Clayey Silt to Silty Clay	ML/CL	medium dense	120	4.1	8	0.070	0.070	3.79	0.77	1.70	49.5	2.53	144.0	13	29	48	31		
0.61	2.0	16.88	3.53	Silty Clay to Clay	CL	stiff	120	3.7	5	0.100	0.100	3.55	0.82	1.70	27.1	2.70		5				0.99	50.4
0.76	2.5	13.27	1.96	Clayey Silt to Silty Clay	ML/CL	stiff	120	3.9	3	0.130	0.130	1.97	0.80	1.70	21.3	2.62		3				0.77	30.3
0.91	3.0	28.73	1.22	Silty Sand to Sandy Silt	SM/ML	medium dense	120	4.6	6	0.160	0.160	1.22	0.68	1.70	46.2	2.23	80.4	11	16	45	30		
1.07	3.5	27.96	0.70	Silty Sand to Sandy Silt	SM/ML	loose	120	4.9	6	0.190	0.190	0.70	0.64	1.70	44.9	2.11	65.9	10	13	44	30		
1.22	4.0	5.59	1.11	Sensitive fine grained	ML	firm	120	3.5	2	0.220	0.220	1.16	0.86	1.70	9.0	2.83		2				0.32	7.3
1.37	4.5	2.56	0.88	Sensitive fine grained	ML	soft	120	2.9	1	0.250	0.234	0.98	0.95	1.70	4.1	3.10		1				0.14	3.0
1.52	5.0	2.53	1.20	Sensitive fine grained	ML	soft	120	2.8	1	0.280	0.249	1.35	0.97	1.70	4.1	3.16		1				0.13	2.7
1.68	5.5	6.38	1.18	Sensitive fine grained	ML	firm	120	3.5	2	0.310	0.263	1.24	0.85	1.70	10.3	2.79		2				0.36	6.9
1.83	6.0	11.71	0.53	Sandy Silt to Clayey Silt	ML	loose	120	4.3	3	0.340	0.278	0.55	0.73	1.70	18.8	2.40	43.1	5	9	7	28		
1.98	6.5	20.58	0.49	Silty Sand to Sandy Silt	SM/ML	loose	120	4.8	4	0.370	0.292	0.50	0.66	1.70	33.1	2.15	33.1	7	7	31	29		
2.13	7.0	42.81	0.47	Sand to Silty Sand	SP/SM	medium dense	120	5.4	8	0.400	0.306	0.47	0.57	1.70	68.8	1.86	68.8	14	14	61	31		
2.29	7.5	69.80	0.43	Sand to Silty Sand	SP/SM	medium dense	120	5.8	12	0.430	0.321	0.43	0.51	1.70	112.2	1.66	112.2	21	22	82	33		
2.44	8.0	82.86	0.47	Sand to Silty Sand	SP/SM	medium dense	120	5.8	14	0.460	0.335	0.47	0.50	1.70	133.1	1.62	133.1	24	27	89	34		
2.59	8.5	92.97	0.40	Sand	SP	medium dense	120	6.0	16	0.490	0.350	0.40	0.50	1.70	149.4	1.54	149.4	26	30	93	35		
2.74	9.0	98.28	0.39	Sand	SP	medium dense	120	6.0	16	0.520	0.364	0.39	0.50	1.70	157.9	1.51	157.9	27	32	96	35		
2.90	9.5	99.69	0.70	Sand to Silty Sand	SP/SM	medium dense	120	5.7	17	0.550	0.378	0.71	0.51	1.68	158.6	1.66	160.3	28	32	96	36		
3.05	10.0	117.17	0.85	Sand	SP	dense	120	5.7	20	0.580	0.393	0.85	0.51	1.66	183.3	1.67	186.1	33	37	100	37		
3.20	10.5	115.51	0.55	Sand	SP	dense	120	5.9	19	0.610	0.407	0.55	0.50	1.61	176.0	1.56	176.0	30	35	100	36		
3.35	11.0	120.47	0.46	Sand	SP	dense	120	6.1	20	0.640	0.422	0.47	0.50	1.58	180.4	1.50	180.4	31	36	100	36		
3.51	11.5	129.14	0.46	Sand	SP	dense	120	6.1	21	0.670	0.436	0.46	0.50	1.56	190.1	1.48	190.1	32	38	100	37		
3.66	12.0	125.90	0.35	Sand	SP	dense	120	6.2	20	0.700	0.450	0.35	0.50	1.53	182.4	1.43	182.4	30	36	100	36		
3.81	12.5	115.08	0.65	Sand	SP	medium dense	120	5.8	20	0.730	0.465	0.65	0.50	1.51	164.1	1.63	164.1	29	33	97	36		
3.96	13.0	138.80	1.23	Sand to Silty Sand	SP/SM	dense	120	5.6	25	0.760	0.479	1.24	0.54	1.53	200.6	1.76	216.0	36	43	100	38		
4.11	13.5	131.30	0.97	Sand	SP	dense	120	5.7	23	0.790	0.494	0.97	0.52	1.49	184.6	1.71	192.3	33	38	100	37		
4.27	14.0	137.92	0.34	Sand	SP	dense	120	6.2	22	0.820	0.508	0.34	0.50	1.44	188.1	1.41	188.1	31	38	100	36		
4.42	14.5	154.71	0.40	Sand	SP	dense	120	6.2	25	0.850	0.522	0.40	0.50	1.42	208.1	1.42	208.1	34	42	100	37		
4.57	15.0	182.05	0.41	Sand	SP	dense	120	6.3	29	0.880	0.537	0.42	0.50	1.40	241.6	1.37	241.6	39	48	100	38		
4.72	15.5	259.78	0.43	Gravelly Sand to Sand	SW	very dense	120	6.5	40	0.910	0.551	0.43	0.50	1.39	340.2	1.27	340.2	54	68	100	41		
4.88	16.0	331.60	0.66	Gravelly Sand to Sand	SW	very dense	120	6.4	52	0.940	0.566	0.66	0.50	1.37	428.7	1.34	428.7	69	86	100	44		
5.03	16.5	442.79	0.51	Gravelly Sand to Sand	SW	very dense	120	6.7	66	0.970	0.580	0.51	0.50	1.35	565.3	1.18	565.3	87	113	100	46		
5.18	17.0	447.59	0.00	Gravelly Sand to Sand	SW	very dense	120	4.1	110	1.000	0.594	0.00	0.76	1.55	656.2	2.51	656.2	142	131	100	50		

Earth Systems
Pacific

CPT No: CPT-3
Project Name: Fire Station No. 7
Project No.: 306642-001
Location: See Site Exploration Plan

CPT Vendor: Kehoe
Truck Mounted Electric
Cone with 23-ton reaction
Date: 5/6/2024

DEPTH (FEET)	Interpreted Soil Stratigraphy Robertson & Campanella ('89)	Density/Consistency
	Sand	dense
	Clayey Silt to Silty Clay	medium dense
	Sandy Silt to Clayey Silt	medium dense
	Sandy Silt to Clayey Silt	loose
5	Clayey Silt to Silty Clay	stiff
	Clayey Silt to Silty Clay	firm
	Sensitive fine grained	soft
	Silty Clay to Clay	firm
	Silty Sand to Sandy Silt	medium dense
	Sand to Silty Sand	medium dense
10	Sand	dense
	Sand to Silty Sand	dense
	Silty Sand to Sandy Silt	medium dense
	Sand to Silty Sand	medium dense
	Sand to Silty Sand	medium dense
15	Sand to Silty Sand	medium dense
	Sand to Silty Sand	medium dense
	Sand	medium dense
	Sand	medium dense
	Sand to Silty Sand	dense
20	Sand to Silty Sand	medium dense
	Sandy Silt to Clayey Silt	loose
	Sandy Silt to Clayey Silt	very loose
	Sandy Silt to Clayey Silt	stiff
	Clayey Silt to Silty Clay	firm
25	Clayey Silt to Silty Clay	stiff
	Clayey Silt to Silty Clay	stiff
	Silty Clay to Clay	firm
	Sensitive fine grained	soft
	Sensitive fine grained	soft
30	Sensitive fine grained	soft
	Sandy Silt to Clayey Silt	stiff
	Sandy Silt to Clayey Silt	stiff
	Sandy Silt to Clayey Silt	stiff
	Clay	stiff
35	Silty Sand to Sandy Silt	loose
	Clayey Silt to Silty Clay	stiff
	Sensitive fine grained	firm
	Sensitive fine grained	soft
	Clay	very soft
40	Clay	#NUM!
	Sensitive fine grained	very soft
	Silty Sand to Sandy Silt	loose
	Silty Sand to Sandy Silt	medium dense
	Silty Sand to Sandy Silt	medium dense
45	Sandy Silt to Clayey Silt	loose
	Silty Sand to Sandy Silt	loose
	Silty Sand to Sandy Silt	medium dense
	Silty Sand to Sandy Silt	medium dense
	Sandy Silt to Clayey Silt	medium dense
50		

End of Sounding @ 50.9 feet

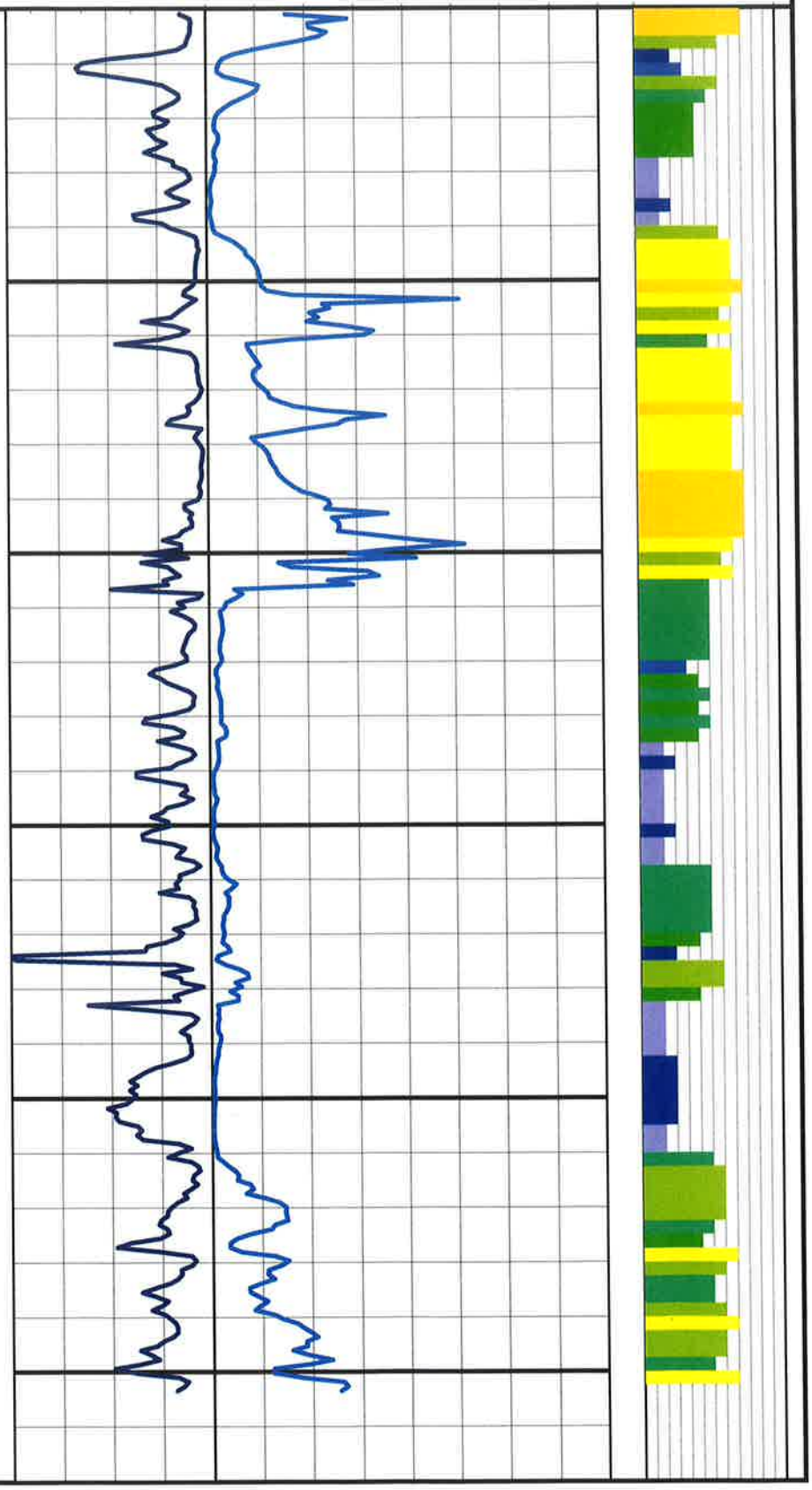

Earth Systems Pacific

CONE PENETROMETER INTERPRETATION

(based on Robertson & Campanella, 1989)

Project: Fire Station No. 7 | Project No: 306642-001 | Date: 05/06/24

CPT SOUNDING: CPT-3 | Plot: 3 | Density: 1 SPT N | Program developed 2003 by Shelton L. Stringer, GE, Earth Systems Southwest

Est. GWT (feet): 6.0 | Dr correlation: 0 Baldi | Qc/N: 0 Jefferies & Davies | Phi Correlation: 4 SPT N

Nk: 17

Base Depth meters	Base Depth feet	Avg Tip Qc, tsf	Avg Friction Ratio, %	Soil Classification	USCS	Density or Consistency	Est. Density (pcf)	Qc to N	SPT N(60)	Total po tsf	p'o tsf	F	n	Cq	Norm. Qc1n	2.6 Ic	Clean Sand Qc1n	$N_{1(60)}$	Clean Sand $N_{1(60)}$	Rel. Dens. Dr (%)	Phi (deg.)	Su (tsf)	OCR
0.15	0.5	117.36	0.62	Sand	SP	dense	100	5.9	20	0.013	0.013	0.62	0.50	1.70	188.6	1.56	188.6	34	38	100	37		
0.30	1.0	110.08	0.70	Sand	SP	dense	100	5.8	19	0.038	0.038	0.70	0.50	1.70	176.9	1.62	176.9	32	35	100	37		
0.46	1.5	47.64	1.38	Silty Sand to Sandy Silt	SM/ML	medium dense	110	4.9	10	0.064	0.064	1.38	0.63	1.70	76.5	2.09	109.9	16	22	66	32		
0.61	2.0	13.95	4.69	Clay	CL/CH	stiff	110	3.4	4	0.091	0.091	4.72	0.86	1.70	22.4	2.84		4				0.82	45.6
0.76	2.5	22.51	3.81	Silty Clay to Clay	CL	very stiff	110	3.9	6	0.119	0.119	3.83	0.80	1.70	36.2	2.63		6				1.32	56.6
0.91	3.0	49.85	1.43	Silty Sand to Sandy Silt	SM/ML	medium dense	120	4.9	10	0.148	0.148	1.43	0.63	1.70	80.1	2.09	114.5	17	23	68	32		
1.07	3.5	26.46	1.40	Sandy Silt to Clayey Silt	ML	loose	120	4.5	6	0.178	0.178	1.41	0.70	1.70	42.5	2.29	82.0	10	16	41	30		
1.22	4.0	10.20	1.90	Clayey Silt to Silty Clay	ML/CL	stiff	120	3.7	3	0.208	0.208	1.94	0.82	1.70	16.4	2.71		3				0.59	14.5
1.37	4.5	9.23	2.11	Clayey Silt to Silty Clay	ML/CL	stiff	120	3.6	3	0.238	0.238	2.17	0.84	1.70	14.8	2.78		3				0.53	11.4
1.52	5.0	10.62	1.87	Clayey Silt to Silty Clay	ML/CL	stiff	120	3.7	3	0.268	0.268	1.91	0.82	1.70	17.1	2.70		3				0.61	11.6
1.68	5.5	8.25	1.78	Clayey Silt to Silty Clay	ML/CL	firm	120	3.6	2	0.298	0.298	1.84	0.85	1.70	13.3	2.78		2				0.47	8.0
1.83	6.0	7.23	0.75	Sensitive fine grained	ML	firm	120	3.8	2	0.328	0.328	0.78	0.81	1.70	11.6	2.65		2				0.41	6.3
1.98	6.5	3.61	1.25	Sensitive fine grained	ML	soft	120	3.1	1	0.358	0.342	1.39	0.93	1.70	5.8	3.03		1				0.19	2.9
2.13	7.0	4.26	1.04	Sensitive fine grained	ML	soft	120	3.3	1	0.388	0.356	1.15	0.90	1.70	6.8	2.93		1				0.23	3.3
2.29	7.5	3.59	2.57	Clay	CL/CH	soft	120	2.8	1	0.418	0.371	2.91	0.98	1.70	5.8	3.19		1				0.19	2.6
2.44	8.0	6.71	1.38	Sensitive fine grained	ML	firm	120	3.5	2	0.448	0.385	1.48	0.86	1.70	10.8	2.81		2				0.37	4.9
2.59	8.5	25.48	0.41	Silty Sand to Sandy Silt	SM/ML	loose	120	5.0	5	0.478	0.400	0.41	0.62	1.70	40.9	2.04	40.9	8	8	40	29		
2.74	9.0	41.03	0.37	Sand to Silty Sand	SP/SM	medium dense	120	5.4	8	0.508	0.414	0.38	0.56	1.69	65.6	1.84	65.6	12	13	59	31		
2.90	9.5	50.66	0.46	Sand to Silty Sand	SP/SM	medium dense	120	5.5	9	0.538	0.428	0.46	0.55	1.65	78.8	1.80	78.8	14	16	67	31		
3.05	10.0	54.24	0.52	Sand to Silty Sand	SP/SM	medium dense	120	5.5	10	0.568	0.443	0.52	0.55	1.62	83.0	1.81	92.6	15	19	69	32		
3.20	10.5	134.19	0.76	Sand	SP	dense	120	5.8	23	0.598	0.457	0.76	0.50	1.52	193.0	1.62	193.0	34	39	100	37		
3.35	11.0	114.62	0.98	Sand to Silty Sand	SP/SM	medium dense	120	5.6	21	0.628	0.472	0.98	0.53	1.54	166.5	1.74	177.4	30	35	98	36		
3.51	11.5	117.51	1.80	Silty Sand to Sandy Silt	SM/ML	dense	120	5.2	22	0.658	0.486	1.81	0.58	1.58	175.1	1.92	211.7	32	42	100	37		
3.66	12.0	137.57	1.27	Sand to Silty Sand	SP/SM	dense	120	5.5	25	0.688	0.500	1.27	0.54	1.50	195.0	1.77	212.2	35	42	100	37		
3.81	12.5	41.47	2.05	Sandy Silt to Clayey Silt	ML	medium dense	120	4.6	9	0.718	0.515	2.09	0.69	1.64	64.4	2.26	118.5	13	24	59	31		
3.96	13.0	50.24	0.46	Sand to Silty Sand	SP/SM	medium dense	120	5.4	9	0.748	0.529	0.46	0.57	1.48	70.3	1.85	70.3	13	14	62	31		
4.11	13.5	46.66	0.40	Sand to Silty Sand	SP/SM	medium dense	120	5.4	9	0.778	0.544	0.40	0.57	1.46	64.4	1.85	64.4	12	13	59	31		
4.27	14.0	56.25	0.29	Sand to Silty Sand	SP/SM	medium dense	120	5.6	10	0.808	0.558	0.29	0.53	1.41	74.7	1.74	74.7	13	15	65	31		
4.42	14.5	74.41	0.58	Sand to Silty Sand	SP/SM	medium dense	120	5.5	13	0.838	0.572	0.59	0.54	1.40	98.2	1.78	107.1	18	21	76	33		
4.57	15.0	146.27	1.02	Sand	SP	dense	120	5.6	26	0.868	0.587	1.03	0.52	1.36	188.3	1.72	197.6	34	40	100	37		
4.72	15.5	100.51	0.77	Sand to Silty Sand	SP/SM	medium dense	120	5.6	18	0.898	0.601	0.78	0.54	1.35	128.7	1.76	138.5	23	28	87	34		
4.88	16.0	51.32	0.35	Sand to Silty Sand	SP/SM	medium dense	120	5.4	9	0.928	0.616	0.36	0.56	1.35	65.7	1.83	65.7	12	13	59	31		
5.03	16.5	63.11	0.25	Sand to Silty Sand	SP/SM	medium dense	120	5.7	11	0.958	0.630	0.26	0.52	1.31	78.1	1.70	78.1	14	16	67	31		
5.18	17.0	71.18	0.27	Sand to Silty Sand	SP/SM	medium dense	120	5.7	12	0.988	0.644	0.28	0.51	1.29	86.6	1.67	86.6	15	17	71	32		
5.33	17.5	86.42	0.34	Sand	SP	medium dense	120	5.8	15	1.018	0.659	0.34	0.50	1.27	103.5	1.64	103.5	18	21	78	33		
5.49	18.0	117.60	0.57	Sand	SP	medium dense	120	5.8	20	1.048	0.673	0.58	0.50	1.26	139.6	1.65	139.9	25	28	91	35		
5.64	18.5	141.45	0.79	Sand	SP	medium dense	120	5.7	25	1.078	0.688	0.80	0.51	1.25	166.7	1.68	170.6	30	34	98	36		
5.79	19.0	131.68	0.80	Sand	SP	medium dense	120	5.7	23	1.108	0.702	0.80	0.52	1.24	154.1	1.71	160.5	28	32	95	35		
5.94	19.5	214.21	1.38	Sand	SP	dense	120	5.6	38	1.138	0.716	1.39	0.53	1.23	248.9	1.73	264.1	45	53	100	40		
6.10	20.0	180.40	1.52	Sand to Silty Sand	SP/SM	dense	120	5.4	33	1.168	0.731	1.53	0.55	1.23	209.2	1.81	233.7	39	47	100	38		
6.25	20.5	104.43	1.93	Silty Sand to Sandy Silt	SM/ML	medium dense	120	5.0	21	1.198	0.745	1.95	0.62	1.24	122.8	2.05	167.6	24	34	85	34		
6.40	21.0	145.99	1.54	Sand to Silty Sand	SP/SM	dense	120	5.3	27	1.228	0.760	1.56	0.57	1.21	166.9	1.88	196.0	32	39	98	36		
6.55	21.5	28.51	1.55	Sandy Silt to Clayey Silt	ML	loose	120	4.3	7	1.258	0.774	1.62	0.73	1.26	33.9	2.41	79.8	8	16	32	29		
6.71	22.0	14.56	1.26	Sandy Silt to Clayey Silt	ML	stiff	120	3.9	4	1.288	0.788	1.38	0.80	1.26	17.4	2.61		4				0.81	5.1
6.86	22.5	12.38	0.77	Sandy Silt to Clayey Silt	ML	very loose	120	3.9	3	1.318	0.803	0.86	0.79	1.24	14.6	2.58	46.7	3	9	-3	28		
7.01	23.0	12.78	0.78	Sandy Silt to Clayey Silt	ML	very loose	120	4.0	3	1.348	0.817	0.87	0.79	1.23	14.8	2.58	47.1	4	9	-2	28		
7.16	23.5	10.46	1.03	Sandy Silt to Clayey Silt	ML	stiff	120	3.7	3	1.378	0.832	1.18	0.83	1.22	12.1	2.72		3				0.57	3.3
7.32	24.0	11.07	1.09	Sandy Silt to Clayey Silt	ML	stiff	120	3.7	3	1.408	0.846	1.25	0.83	1.20	12.6	2.71		3				0.60	3.4
7.47	24.5	6.69	2.17	Silty Clay to Clay	CL	firm	120	3.0	2	1.438	0.860	2.76	0.94	1.22	7.7	3.07		2				0.34	1.8
7.62	25.0	7.98	1.25	Clayey Silt to Silty Clay	ML/CL	firm	120	3.4	2	1.468	0.875	1.53	0.89	1.18	8.9	2.88		2				0.42	2.2
7.77	25.5	10.67	0.65	Sandy Silt to Clayey Silt	ML	stiff	120	3.8	3	1.498	0.889	0.75	0.81	1.15	11.6	2.64		3				0.58	3.1
7.92	26.0	11.11	1.64	Clayey Silt to Silty Clay	ML/CL	stiff	120	3.5	3	1.528	0.904	1.90	0.86	1.15	12.0	2.82		3				0.60	3.2
8.08	26.5	14.76	1.57	Sandy Silt to Clayey Silt	ML	stiff	120	3.7	4	1.558	0.918	1.76	0.83	1.12	15.7	2.71		4				0.81	4.3
8.23	27.0	7.76	1.40	Clayey Silt to Silty Clay	ML/CL	firm	120	3.2	2	1.588	0.932	1.76	0.91	1.12	8.2	2.95		2				0.40	2.0
8.38	27.5	8.50	0.90	Sensitive fine grained	ML	firm	120	3.5	2	1.618	0.947	1.11	0.87	1.10	8.9	2.82		2				0.44	2.2
8.53	28.0	4.19	2.50	Clay	CL/CH	soft	120	2.4	2	1.648	0.961	4.11	1.00	1.10	4.4	3.37		2				0.19	0.8
8.69	28.5	3.34	1.30	Sensitive fine grained	ML	soft	120	2.4	1	1.678	0.976	2.61	1.00	1.08	3.4	3.36		1				0.14	0.5
8.84	29.0	5.54	0.99	Sensitive fine grained	ML	firm	120	3.0	2	1.708	0.990	1.43	0.95	1.06	5.6	3.05		2				0.27	1.2
8.99	29.5	3.12	2.01	Sensitive fine grained	ML	very soft	120	2.1	1	1.738	1.004	4.53	1.00	1.05	3.1	3.52		1				0.12	0.4
9.14	30.0	3.14	1.90	Sensitive fine grained	ML	very soft	120	2.1	1	1.768	1.019	4.34	1.00	1.04	3.1	3.51		1				0.12	0.4
9.30	30.5	3.68	2.32	Clay	CL/CH	soft	120	2.2	2	1.798	1.033	4.54	1.00	1.02	3.6	3.47		2				0.16	0.5
9.45	31.0	6.00	1.21	Sensitive fine grained	ML	firm	120	3.0	2	1.828	1.048	1.74	0.95	1.01	5.7	3.08		2				0.29	1.2
9.60	31.5	9.50	0.61	Sensitive fine grained	ML	firm	120	3.6	3	1.858	1.062	0.76	0.85	1.00	8.9	2.75		3				0.50	2.2
9.75	32.0	18.60	1.31	Sandy Silt to Clayey Silt	ML	very stiff	120	3.9	5	1.888	1.076	1.46	0.80	0.99	17.3	2.63		5				1.03	4.7
9.91	32.5	17.80	1.41	Sandy Silt to Clayey Silt	ML	stiff	120	3.8	5	1.918	1.091	1.59	0.81	0.98	16.4	2.66		5				0.98	4.4
10.06	33.0	17.00	0.67	Sandy Silt to Clayey Silt	ML	very loose	120	4.0	4	1.948	1.105	0.75	0.77	0.97	15.5	2.53	45.4	4	9	0	28		
10.21	33.5	12.22	0.70	Sandy Silt to Clayey Silt	ML	stiff	120	3.8	3	1.978	1.120	0.83	0.82	0.95	11.0	2.68		3				0.65	2.7
10.36	34.0	12.42	1.31	Sandy Silt to Clayey Silt	ML	stiff	120	3.5	4	2.008	1.134	1.57	0.86	0.94	11.1	2.81		4				0.66	2.8
10.52	34.5	15.49	2.35	Clayey Silt to Silty Clay	ML/CL	stiff	120	3.4	5	2.038	1.148	2.70	0.87	0.93	13.6	2.86		5				0.84	3.5
10.67	35.0	8.29	5.82	Clay	CL/CH	firm	120	2.4	3	2.068	1.163	7.75	1.00	0.91	7.1	3.36		3				0.42	1.6
10.82	35.5	33.73	1.33	Silty Sand to Sandy Silt	SM/ML	loose	120	4.3	8	2.098	1.177	1.42	0.74	0.92	29.5	2.43	71.3	7	14	26	29		
10.97	36.0	24.27	0.82	Silty Sand to Sandy Silt	SM/ML	loose	120	4.2	6	2.128	1.192	0.90	0.75	0.91	21.0	2.45	52.9	5	11	12	28		
11.13	36.5	16.60	2.62	Clayey Silt to Silty Clay	ML/CL	stiff	120	3.4	5	2.158	1.206	3.01	0.88	0.89	14.0	2.88		5				0.91	3.6
11.28	37.0	6.65	0.71	Sensitive fine grained	ML	firm	120	3.1	2	2.188	1.220	1.05	0.93	0.88	5.5	3.00		2				0.32	1.1
11.43	37.5	7.02	1.05	Sensitive fine grained	ML	firm	120	3.0	2	2.218	1.235	1.54	0.95	0.86	5.7	3.05		2				0.34	1.2
11.58	38.0	7.56	0.87	Sensitive fine grained	ML	firm	120	3.2	2	2.248	1.249	1.24	0.93	0.86	6.1	2.99		2				0.37	1.3
11.73	38.5	5.13	1.14	Sensitive fine grained	ML	soft	120	2.6	2	2.278	1.264	2.04	1.00	0.84	4.1	3.25		2				0.23	0.7
11.89	39.0	3.06	2.63	Clay	CL/CH	very soft	120	1.5	2	2.308	1.278	10.67	1.00	0.83	2.4	3.82		2				0.11	0.2
12.04	39.5	2.17	3.19	Clay	CL/CH	#NUM!	120	###	####	2.338	1.292	-40.47	#####	#NUM!	#####	#NUM!	#NUM!	####	####	#####	####	#####	####
12.19	40.0	2.58	3.23	Clay	CL/CH	very soft	120	0.7	4	2.368	1.307	39.18	1.00	0.81	2.0	4.24		4				0.07	0.0
12.34	40.5	1.78	3.96	Clay	CL/CH	#NUM!	120	###	####	2.398	1.321	-11.35	#####	#NUM!	#####	#NUM!	#NUM!	####	####	#####	####	#####	####
12.50	41.0	1.56	3.18	Clay	CL/CH	#NUM!	120	###	####	2.428	1.336	-5.72	#####	#NUM!	#####	#NUM!	#NUM!	####	####	#####	####	#####	####
12.65	41.5	1.94	2.38	Sensitive fine grained	ML	#NUM!	120	###	####	2.458	1.350	-8.91	#####	#NUM!	#####	#NUM!	#NUM!	####	####	#####	####	#####	####
12.80	42.0	4.17	1.33	Sensitive fine grained	ML	soft	120	2.2	2	2.488	1.364	3.30	1.00	0.78	3.1	3.45		2				0.17	0.4
12.95	42.5	16.36	0.65	Sandy Silt to Clayey Silt	ML	stiff	120	3.9	4	2.518	1.379	0.77	0.80	0.81	12.5	2.62		4				0.88	3.0

Earth Systems Pacific

CONE PENETROMETER INTERPRETATION

(based on Robertson & Campanella, 1989)

Project: Fire Station No. 7 | Project No: 306642-001 | Date: 05/06/24

CPT SOUNDING: CPT-3 | Plot: 3 | Density: 1 SPT N | Program developed 2003 by Shelton L. Stringer, GE, Earth Systems Southwest

Est. GWT (feet): 6.0 | Dr correlation: 0 Baldi | Qc/N: 0 Jefferies & Davies | Phi Correlation: 4 SPT N

Nk: 17

Base Depth meters	Base Depth feet	Avg Tip Qc, tsf	Avg Friction Ratio, %	Soil Classification	USCS	Density or Consistency	Est. Density (pcf)	Qc to N	SPT N(60)	Total po tsf	p'o tsf	F	n	Cq	Norm. Qc1n	2.6 Ic	Clean Sand Qc1n	$N_{1(60)}$	Clean Sand $N_{1(60)}$	Rel. Dens. Dr (%)	Phi (deg.)	Su (tsf)	OCR
13.11	43.0	29.62	0.73	Silty Sand to Sandy Silt	SM/ML	loose	120	4.3	7	2.548	1.393	0.80	0.73	0.82	22.9	2.39	52.1	6	10	16	28		
13.26	43.5	42.16	1.03	Silty Sand to Sandy Silt	SM/ML	loose	120	4.4	9	2.578	1.408	1.09	0.71	0.82	32.5	2.33	66.3	8	13	30	29		
13.41	44.0	71.09	1.61	Silty Sand to Sandy Silt	SM/ML	medium dense	120	4.6	16	2.608	1.422	1.68	0.69	0.82	54.8	2.25	99.3	13	20	52	31		
13.56	44.5	70.37	2.01	Silty Sand to Sandy Silt	SM/ML	medium dense	120	4.4	16	2.638	1.436	2.09	0.71	0.81	53.6	2.32	108.7	13	22	51	31		
13.72	45.0	40.38	1.90	Sandy Silt to Clayey Silt	ML	loose	120	4.1	10	2.668	1.451	2.03	0.77	0.79	30.0	2.51	84.7	8	17	27	29		
13.87	45.5	21.01	3.07	Clayey Silt to Silty Clay	ML/CL	very stiff	120	3.3	6	2.698	1.465	3.53	0.89	0.75	14.9	2.90		6				1.15	3.8
14.02	46.0	68.94	0.80	Sand to Silty Sand	SP/SM	medium dense	120	4.9	14	2.728	1.480	0.83	0.64	0.81	52.6	2.09	75.4	12	15	50	31		
14.17	46.5	57.72	1.32	Silty Sand to Sandy Silt	SM/ML	medium dense	120	4.5	13	2.758	1.494	1.38	0.70	0.79	42.9	2.29	81.8	10	16	42	30		
14.33	47.0	41.94	2.28	Sandy Silt to Clayey Silt	ML	loose	120	4.0	11	2.788	1.508	2.44	0.78	0.76	30.1	2.56	92.9	9	19	27	29		
14.48	47.5	47.91	2.10	Sandy Silt to Clayey Silt	ML	loose	120	4.1	12	2.818	1.523	2.24	0.76	0.76	34.4	2.49	93.5	9	19	32	30		
14.63	48.0	71.72	1.73	Silty Sand to Sandy Silt	SM/ML	medium dense	120	4.5	16	2.848	1.537	1.80	0.70	0.77	52.2	2.29	100.1	13	20	50	31		
14.78	48.5	98.21	1.50	Sand to Silty Sand	SP/SM	medium dense	120	4.8	20	2.878	1.552	1.54	0.65	0.78	72.3	2.14	110.7	16	22	63	32		
14.94	49.0	88.78	2.41	Silty Sand to Sandy Silt	SM/ML	medium dense	120	4.5	20	2.908	1.566	2.49	0.71	0.76	63.6	2.32	128.4	16	26	58	32		
15.09	49.5	103.47	2.53	Silty Sand to Sandy Silt	SM/ML	medium dense	120	4.5	23	2.938	1.580	2.61	0.70	0.76	74.0	2.29	141.6	18	28	64	33		
15.24	50.0	70.05	2.82	Sandy Silt to Clayey Silt	ML	medium dense	120	4.2	17	2.967	1.595	2.94	0.75	0.74	48.7	2.46	124.4	13	25	47	31		
15.39	50.5	131.07	1.24	Sand to Silty Sand	SP/SM	medium dense	120	5.1	26	2.997	1.609	1.27	0.61	0.78	96.0	1.99	123.7	20	25	75	33		

Earth Systems
Pacific

CPT No: CPT-4
Project Name: Fire Station No. 7
Project No.: 306642-001
Location: See Site Exploration Plan

CPT Vendor: **Kehoe**
Truck Mounted Electric
Cone with 23-ton reaction
Date: 5/6/2024

DEPTH (FEET)	Interpreted Soil Stratigraphy Robertson & Campanella ('89)	Density/Consistency
	Silty Sand to Sandy Silt	dense
	Silty Sand to Sandy Silt	medium dense
	Silty Clay to Clay	very stiff
	Clayey Silt to Silty Clay	medium dense
2.5	Silty Clay to Clay	very stiff
	Clayey Silt to Silty Clay	medium dense
	Clayey Silt to Silty Clay	medium dense
	Clay	stiff
	Clay	firm
5.0	Silty Clay to Clay	firm
	Silty Clay to Clay	firm
	Clay	firm
	Clay	firm
	Sandy Silt to Clayey Silt	loose
7.5	Silty Sand to Sandy Silt	loose
	Silty Sand to Sandy Silt	medium dense
	Sand to Silty Sand	medium dense
	Sand	medium dense
	Sand	medium dense
10.0	Sand	medium dense
	Sand	medium dense
	Sand	dense
	Sand	dense
	Sand to Silty Sand	dense
12.5	Sand to Silty Sand	very dense
	Sand	very dense
	Sand	very dense
	Gravelly Sand to Sand	very dense
	Gravelly Sand to Sand	very dense
15.0	Sand	dense
	Sand	dense
	Sand	dense
	Sand	dense
	Sand	dense
17.5	Sand to Silty Sand	dense
	Sand	very dense
	Gravelly Sand to Sand	very dense
20.0		
22.5		
25.0		

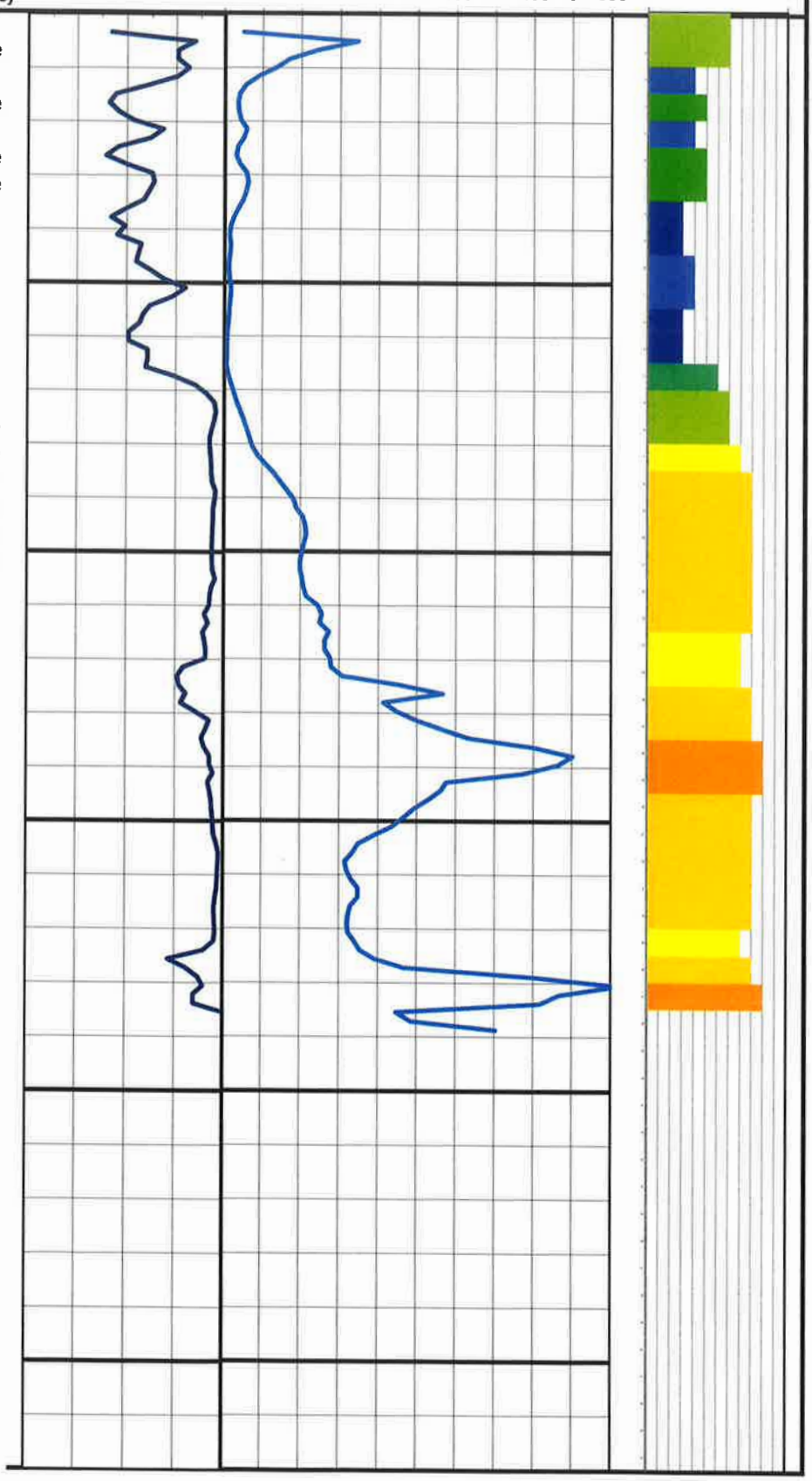

Earth Systems Pacific

CONE PENETROMETER INTERPRETATION

(based on Robertson & Campanella, 1989)

Project: Fire Station No. 7 | Project No: 306642-001 | Date: 05/06/24

CPT SOUNDING: CPT-4 | Plot: 4 | Density: 1 SPT N | Program developed 2003 by Shelton L. Stringer, GE, Earth Systems Southwest

Est. GWT (feet): 4.0 | Dr correlation: 0 Baldi | Qc/N: 0 Jefferies & Davies | Phi Correlation: 4 SPT N

Nk: 17

Base Depth meters	Base Depth feet	Avg Tip Qc, tsf	Avg Friction Ratio, %	Soil Classification	USCS	Density or Consistency	Est. Density (pcf)	Qc to N	SPT N(60)	Total po tsf	p'o tsf	F	n	Cq	Norm. Qc1n	2.6 Ic	Clean Sand Qc1n	$N_{1(60)}$	Clean Sand $N_{1(60)}$	Rel. Dens. Dr (%)	Phi (deg.)	Su (tsf)	OCR
0.15	0.5	106.13	2.61	Silty Sand to Sandy Silt	SM/ML	dense	110	5.0	21	0.014	0.014	2.61	0.62	1.70	170.5	2.05	234.3	36	47	99	38		
0.30	1.0	65.73	1.80	Silty Sand to Sandy Silt	SM/ML	medium dense	120	5.0	13	0.043	0.043	1.80	0.63	1.70	105.6	2.07	147.4	23	29	79	34		
0.46	1.5	22.18	4.13	Silty Clay to Clay	CL	very stiff	120	3.8	6	0.073	0.073	4.14	0.81	1.70	35.6	2.66		6				1.30	91.5
0.61	2.0	23.60	3.53	Clayey Silt to Silty Clay	ML/CL	medium dense	120	3.9	6	0.103	0.103	3.55	0.79	1.70	37.9	2.59	123.9	10	25	37	30		
0.76	2.5	19.99	4.08	Silty Clay to Clay	CL	very stiff	120	3.7	5	0.133	0.133	4.11	0.81	1.70	32.1	2.69		5				1.17	45.0
0.91	3.0	27.30	3.29	Clayey Silt to Silty Clay	ML/CL	medium dense	120	4.1	7	0.163	0.163	3.31	0.77	1.70	43.9	2.52	126.8	11	25	43	30		
1.07	3.5	24.37	3.48	Clayey Silt to Silty Clay	ML/CL	medium dense	120	4.0	6	0.193	0.193	3.51	0.78	1.70	39.2	2.58	124.8	10	25	38	30		
1.22	4.0	9.78	4.37	Clay	CL/CH	stiff	120	3.2	3	0.223	0.223	4.47	0.89	1.70	15.7	2.94		3				0.56	12.9
1.37	4.5	8.01	3.53	Clay	CL/CH	firm	120	3.2	2	0.253	0.237	3.64	0.90	1.70	12.9	2.96		2				0.46	9.8
1.52	5.0	7.92	2.38	Silty Clay to Clay	CL	firm	120	3.4	2	0.283	0.251	2.47	0.87	1.70	12.7	2.86		2				0.45	9.1
1.68	5.5	7.32	3.01	Silty Clay to Clay	CL	firm	120	3.2	2	0.313	0.266	3.15	0.90	1.70	11.8	2.95		2				0.41	7.9
1.83	6.0	4.58	3.67	Clay	CL/CH	firm	120	2.8	2	0.343	0.280	3.97	0.97	1.70	7.4	3.18		2				0.25	4.5
1.98	6.5	4.98	2.82	Clay	CL/CH	firm	120	3.0	2	0.373	0.295	3.05	0.94	1.70	8.0	3.08		2				0.28	4.7
2.13	7.0	13.77	0.79	Sandy Silt to Clayey Silt	ML	loose	120	4.3	3	0.403	0.309	0.82	0.73	1.70	22.1	2.41	51.9	5	10	14	28		
2.29	7.5	26.13	0.44	Silty Sand to Sandy Silt	SM/ML	loose	120	5.0	5	0.433	0.323	0.44	0.62	1.70	42.0	2.04	42.0	9	8	41	30		
2.44	8.0	38.60	0.60	Silty Sand to Sandy Silt	SM/ML	medium dense	120	5.2	7	0.463	0.338	0.60	0.59	1.70	62.0	1.95	77.1	13	15	57	31		
2.59	8.5	64.50	0.53	Sand to Silty Sand	SP/SM	medium dense	120	5.6	12	0.493	0.352	0.54	0.53	1.70	103.6	1.74	110.1	19	22	78	33		
2.74	9.0	89.36	0.41	Sand	SP	medium dense	120	5.9	15	0.523	0.367	0.41	0.50	1.70	143.5	1.56	143.5	25	29	92	35		
2.90	9.5	105.54	0.48	Sand	SP	medium dense	120	6.0	18	0.553	0.381	0.48	0.50	1.67	166.3	1.54	166.3	29	33	98	36		
3.05	10.0	101.63	0.50	Sand	SP	medium dense	120	5.9	17	0.583	0.395	0.51	0.50	1.64	157.2	1.57	157.2	27	31	96	35		
3.20	10.5	101.84	0.47	Sand	SP	medium dense	120	5.9	17	0.613	0.410	0.47	0.50	1.61	154.7	1.56	154.7	27	31	95	35		
3.35	11.0	119.07	0.67	Sand	SP	dense	120	5.8	20	0.643	0.424	0.68	0.50	1.58	177.8	1.61	177.8	31	36	100	36		
3.51	11.5	130.53	0.79	Sand	SP	dense	120	5.8	22	0.673	0.439	0.79	0.50	1.55	191.6	1.63	191.6	34	38	100	37		
3.66	12.0	136.11	1.06	Sand to Silty Sand	SP/SM	dense	120	5.6	24	0.703	0.453	1.07	0.52	1.56	200.3	1.71	209.3	36	42	100	37		
3.81	12.5	221.34	1.78	Sand to Silty Sand	SP/SM	very dense	120	5.6	40	0.733	0.467	1.78	0.54	1.55	324.1	1.76	348.7	58	70	100	42		
3.96	13.0	225.73	1.18	Sand	SP	very dense	120	5.8	39	0.763	0.482	1.19	0.50	1.48	316.2	1.62	316.2	56	63	100	42		
4.11	13.5	332.62	0.84	Sand	SP	very dense	120	6.3	53	0.793	0.496	0.84	0.50	1.46	459.1	1.40	459.1	75	92	100	45		
4.27	14.0	423.18	0.54	Gravelly Sand to Sand	SW	very dense	120	6.7	63	0.823	0.511	0.54	0.50	1.44	575.8	1.19	575.8	89	115	100	46		
4.42	14.5	277.38	0.58	Gravelly Sand to Sand	SW	very dense	120	6.4	43	0.853	0.525	0.58	0.50	1.42	372.2	1.33	372.2	60	74	100	42		
4.57	15.0	232.35	0.46	Sand	SP	dense	120	6.4	36	0.883	0.539	0.46	0.50	1.40	307.6	1.32	307.6	49	62	100	40		
4.72	15.5	178.41	0.31	Sand	SP	dense	120	6.4	28	0.913	0.554	0.31	0.50	1.38	233.1	1.31	233.1	37	47	100	38		
4.88	16.0	163.93	0.25	Sand	SP	dense	120	6.4	25	0.943	0.568	0.25	0.50	1.36	211.4	1.30	211.4	34	42	100	37		
5.03	16.5	166.48	0.37	Sand	SP	dense	120	6.3	27	0.973	0.583	0.37	0.50	1.35	212.1	1.39	212.1	35	42	100	37		
5.18	17.0	163.68	0.37	Sand	SP	dense	120	6.3	26	1.003	0.597	0.37	0.50	1.33	206.0	1.40	206.0	34	41	100	37		
5.33	17.5	201.84	1.54	Sand to Silty Sand	SP/SM	dense	120	5.5	36	1.033	0.611	1.55	0.54	1.34	256.4	1.77	277.4	47	55	100	40		
5.49	18.0	446.87	1.04	Sand	SP	very dense	120	6.2	72	1.063	0.626	1.04	0.50	1.30	549.2	1.44	549.2	91	110	100	47		
5.64	18.5	291.39	0.41	Gravelly Sand to Sand	SW	very dense	120	6.6	44	1.093	0.640	0.41	0.50	1.29	354.1	1.24	354.1	55	71	100	42		

Earth Systems
5917 Olivas Park Drive, Suite F, Ventura, CA
PHONE: (805) 642-6727 FAX: (805) 642-1325

BORING NO: B-1
PROJECT NAME: Fire Station 7
PROJECT NUMBER: 306642-001
BORING LOCATION: Per Plan

DRILLING DATE: May 8, 2024
DRILL RIG: CME-75
DRILLING METHOD: Mud Rotary
LOGGED BY: V. Wallace

Vertical Depth	Sample Type: Bulk	Sample Type: SPT	Sample Type: Mod. Calif.	PENETRATION RESISTANCE (BLOWS/6"	SYMBOL	USCS CLASS	UNIT DRY WT. (pcf)	MOISTURE CONTENT (%)	DESCRIPTION OF UNITS
0	X								**5" Asphalt; 1.5" Base Material**
			■	2/4/1		SM			**ARTIFICIAL FILL:** Yellowish Brown Silty Sand, little Clay, loose, moist
5			■	Push/Push/2		SM	109.5	18.4	**MARINE TERRACE DEPOSIT:** Yellowish Brown Silty Sand, trace Clay, very loose, wet
			■	6/8/10		SP	100.0	21.4	**MARINE TERRACE DEPOSIT:** Yellowish Brown medium Sand, trace Silt, medium dense, wet
10			■	6/11/14			103.9	18.2	
15		■		6/9/12		SP /SM			**MARINE TERRACE DEPOSIT:** Yellowish Brown Sand, some Silt, medium dense, wet
20		■		2/11/13		SM			**ALLUVIUM:** Yellowish Brown fine Sand, little Silt, medium dense, moist
25		■		4/8/7					Same as above
30		■		3/4/4		CL			**ALLUVIUM:** Yellowish Brown Silty Clay, medium stiff, moist
35		■		4/8/13		SM			**ALLUVIUM:** Yellowish Brown Silty Sand, medium dense, moist

Note: The stratification lines shown represent the approximate boundaries between soil and/or rock types and the transitions may be gradual.

Earth Systems
5917 Olivas Park Drive, Suite F, Ventura, CA
PHONE: (805) 642-6727 FAX: (805) 642-1325

BORING NO: B-1
PROJECT NAME: Fire Station 7
PROJECT NUMBER: 306642-001
BORING LOCATION: Per Plan

DRILLING DATE: May 8, 2024
DRILL RIG: CME-75
DRILLING METHOD: Mud Rotary
LOGGED BY: V. Wallace

Vertical Depth	Sample Type: Bulk	Sample Type: SPT	Sample Type: Mod. Calif.	PENETRATION RESISTANCE (BLOWS/6"	SYMBOL	USCS CLASS	UNIT DRY WT. (pcf)	MOISTURE CONTENT (%)	DESCRIPTION OF UNITS
40		■		6/9/9		SM			Same As Above
45		■		4/8/17					
50		■		7/19/31		SW			**ALLUVIUM:** Yellowish Brown fine to medium Sand, trace Silt, dense, moist
55									**Total Depth: 51.5 feet** **Groundwater Depth: 4.0 feet**
60									
65									
70									
75									

Note: The stratification lines shown represent the approximate boundaries between soil and/or rock types and the transitions may be gradual.

Earth Systems
5917 Olivas Park Drive, Suite F, Ventura, CA
PHONE: (805) 642-6727 FAX: (805) 642-1325

BORING NO: B-2
PROJECT NAME: Fire Station 7
PROJECT NUMBER: 306642-001
BORING LOCATION: Per Plan

DRILLING DATE: May 8, 2024
DRILL RIG: CME-75
DRILLING METHOD: Mud Rotary
LOGGED BY: V. Wallace

Vertical Depth	Sample Type: Bulk	Sample Type: SPT	Sample Type: Mod. Calif.	PENETRATION RESISTANCE (BLOWS/6"	SYMBOL	USCS CLASS	UNIT DRY WT. (pcf)	MOISTURE CONTENT (%)	DESCRIPTION OF UNITS
0									**4" Asphalt; 0" Base Material**
	X		■	3/6/6		SM	109.2	18.6	**ARTIFICIAL FILL:** Yellowish Brown Silty Sand, trace Clay, loose, moist to wet
5			■	Push/1/3		ML	79.7	33.8	**MARINE TERRACE DEPOSIT:** Olive Brown Sandy Silt, loose, wet
			■	4/11/20		SW	99.6	18.0	**MARINE TERRACE DEPOSIT:** Yellowish Brown fine to medium Sand, trace Silt, medium dense, wet
10			■	6/10/14			108.6	18.4	
15		■		7/17/50-2"		SM			**MARINE TERRACE DEPOSIT:** Yellowish Brown Silty fine Sand, very dense, moist
20		■		10/17/21					Becomes Dense
						GP			**MARINE TERRACE DEPOSIT:** Yellowish Brown Sandy Gravel, trace Silt, medium dense, moist
25		■		10/12/14		SM			**ALLUVIUM:** Yellowish Brown Silty fine Sand, very dense, moist
30			■	9/22/16		ML			**ALLUVIUM:** Yellowish Brown Sandy Silt, trace Clay, hard, moist
35		■		11/7/8		ML		24.0	**ALLUVIUM:** Yellowish Brown Sandy Silt, very stiff, moist
						SM			**ALLUVIUM:** Yellowish Brown Silty fine Sand, medium dense, moist

Note: The stratification lines shown represent the approximate boundaries between soil and/or rock types and the transitions may be gradual.

Earth Systems
5917 Olivas Park Drive, Suite F, Ventura, CA
PHONE: (805) 642-6727 FAX: (805) 642-1325

BORING NO: B-2
PROJECT NAME: Fire Station 7
PROJECT NUMBER: 306642-001
BORING LOCATION: Per Plan

DRILLING DATE: May 8, 2024
DRILL RIG: CME-75
DRILLING METHOD: Mud Rotary
LOGGED BY: V. Wallace

Vertical Depth	Sample Type: Bulk	Sample Type: SPT	Sample Type: Mod. Calif.	PENETRATION RESISTANCE (BLOWS/6"	SYMBOL	USCS CLASS	UNIT DRY WT. (pcf)	MOISTURE CONTENT (%)	DESCRIPTION OF UNITS
40		■		8/9/9		SM			**ALLUVIUM:** Yellowish Brown Silty fine Sand, medium dense, moist
45		■		9/10/10		ML		18.5	**ALLUVIUM:** Yellowish Brown Sandy Silt, little Clay, very stiff, moist
50			■	25/50-6"		SW			**ALLUVIUM:** Yellowish Brown fine to coarse Sand, little Silt, trace Gravel, very dense, moist
						GP			**ALLUVIUM:** Yellowish Brown Sandy Gravel with Cobbles, trace Silt, very dense, moist
55		■		5/5/10		SM			**ALLUVIUM:** Yellowish Brown Silty fine Sand, medium dense, moist
60		■		6/6/8		ML		21.1	**ALLUVIUM:** Olive Brown Silty Sand/Sandy Silt, little Clay, stiff, moist
65									**Total Depth: 61.5 feet** **Groundwater Depth: 4.0 feet**
70									
75									

Note: The stratification lines shown represent the approximate boundaries between soil and/or rock types and the transitions may be gradual.

Earth Systems
5917 Olivas Park Drive, Suite F, Ventura, CA
PHONE: (805) 642-6727 FAX: (805) 642-1325

BORING NO: B-3
PROJECT NAME: Fire Station 7
PROJECT NUMBER: 306642-001
BORING LOCATION: Per Plan

DRILLING DATE: June 26, 2024
DRILL RIG: CME-75
DRILLING METHOD: Mud Rotary
LOGGED BY: V. Wallace

Vertical Depth	Sample Type: Bulk	Sample Type: SPT	Sample Type: Mod. Calif.	PENETRATION RESISTANCE (BLOWS/6"	SYMBOL	USCS CLASS	UNIT DRY WT. (pcf)	MOISTURE CONTENT (%)	DESCRIPTION OF UNITS
0									**5" Asphalt; 0" Base Material**
		■		4/4/5		SM			**ARTIFICIAL FILL:** Yellowish Brown Silty Sand, trace Clay, loose, moist to wet
5		■		1/push/18		SM			**MARINE TERRACE DEPOSIT:** Grayish brown Silty Sand, trace Clay
		■		3/3/4		SP			**MARINE TERRACE DEPOSIT:** Yellowish Brown Sand, trace Silt, loose, wet
10		■		11/11/12					Becomes medium dense
		■		5/9/12					
15		■		7/10/23		SW			**MARINE TERRACE DEPOSIT:** Yellowish Brown Sand, trace Silt, trace Gravel, medium dense, wet
		■		11/10/10					
20		■		14/25/19		GW			**MARINE TERRACE DEPOSIT:** Yellowish Brown Sandy Gravel, trace Silt, dense, wet
		■		11/22/35		GP			**ALLUVIUM:** Yellowish Brown Gravel, trace Sand, very dense, wet
25		■							
		■		5/6/10		SM			**ALLUVIUM:** Yellowish Brown Silty Sand, medium dense, wet
30		■		4/6/5		ML			**ALLUVIUM:** Yellowish Brown fine-Sandy Silt, stiff, wet
		■		4/6/7		SM	-	20.6	**ALLUVIUM:** Yellowish Brown Silty Sand, trace Clay, medium dense, wet
35		■		6/10/6		SM			**ALLUVIUM:** Yellowish Brown Silty Sand, medium dense, moist
		■		5/4/5		ML	-	19.5	**ALLUVIUM:** Yellowish Brown Clayey Silt, stiff, wet

Note: The stratification lines shown represent the approximate boundaries between soil and/or rock types and the transitions may be gradual.

Earth Systems
5917 Olivas Park Drive, Suite F, Ventura, CA
PHONE: (805) 642-6727 FAX: (805) 642-1325

BORING NO: B-3
PROJECT NAME: Fire Station 7
PROJECT NUMBER: 306642-001
BORING LOCATION: Per Plan

DRILLING DATE: June 26, 2024
DRILL RIG: CME-75
DRILLING METHOD: Mud Rotary
LOGGED BY: V. Wallace

Vertical Depth	Sample Type: Bulk	Sample Type: SPT	Sample Type: Mod. Calif.	PENETRATION RESISTANCE (BLOWS/6"	SYMBOL	USCS CLASS	UNIT DRY WT. (pcf)	MOISTURE CONTENT (%)	DESCRIPTION OF UNITS
40		■		6/4/6		SM			**ALLUVIUM:** Yellowish Brown Silty fine Sand, loose to medium dense, wet
		■		7/7/10					
45		■		13/13/11		SM			**ALLUVIUM:** Yellowish Brown Silty fine Sand, trace Clay, medium dense, wet
		■		7/9/11		SM			**ALLUVIUM:** Yellowish Brown Silty fine Sand, medium dense, wet
50		■		11/13/13		SM			**ALLUVIUM:** Yellowish Brown Silty fine Sand, medium dense, wet
		■		9/39/42		SM			**ALLUVIUM:** Yellowish Brown Silty fine Sand, trace Clay, very dense, wet
55		■		15/16/27		SM			**ALLUVIUM:** Yellowish Brown Silty fine to medium Sand, trace Clay, dense, wet
		■		13/17/15					
60									**Total Depth: 59.0 feet**
									Groundwater Depth: 6.0 feet
65									
70									
75									

Note: The stratification lines shown represent the approximate boundaries between soil and/or rock types and the transitions may be gradual.

BORING LOG SYMBOLS

Modified California Split Barrel Sampler

Modified California Split Barrel Sampler - No Recovery

Standard Penetration Test (SPT) Sampler

Standard Penetration Test (SPT) Sampler - No Recovery

Perched Water Level

Water Level First Encountered

Water Level After Drilling

Pocket Penetrometer (tsf)

Vane Shear (ksf)

1. The location of borings were approximately determined by pacing and/or siting from visible features. Elevations of borings are approximately determined by interpolating between plan contours. The location and elevation of the borings should be considered.

2. The stratification lines represent the approximate boundary between soil types and the transition may be gradual.

3. Water level readings have been made in the drill holes at times and under conditions stated on the boring logs. This data has been reviewed and interpretations made in the text of this report. However, it must be noted that fluctuations in the level of the groundwater may occur due to variations in rainfall, tides, temperature, and other factors at the time measurements were made.

BORING LOG SYMBOLS

Earth Systems

UNIFIED SOIL CLASSIFICATION SYSTEM

MAJOR DIVISIONS			GRAPH SYMBOL	LETTER SYMBOL	TYPICAL DESCRIPTIONS
COARSE GRAINED SOILS	GRAVEL AND GRAVELLY SOILS	CLEAN GRAVELS (LITTLE OR NO FINES)		GW	WELL-GRADED GRAVELS, GRAVEL-SAND MIXTURES, LITTLE OR NO FINES
				GP	POORLY-GRADED GRAVELS, GRAVEL-SAND MIXTURES, LITTLE OR NO FINES
	MORE THAN 50% OF COARSE FRACTION RETAINED ON NO. 4 SIEVE	GRAVELS WITH FINES (APPRECIABLE AMOUNT OF FINES)		GM	SILTY GRAVELS, GRAVEL-SAND-SILT MIXTURES
				GC	CLAYEY GRAVELS, GRAVEL-SAND-CLAY MIXTURES
	SAND AND SANDY SOILS	CLEAN SAND (LITTLE OR NO FINES)		SW	WELL-GRADED SANDS, GRAVELLY SANDS, LITTLE OR NO FINES
				SP	POORLY-GRADED SANDS, GRAVELLY SANDS, LITTLE OR NO FINES
MORE THAN 50% OF MATERIAL IS LARGER THAN NO. 200 SIEVE SIZE	MORE THAN 50% OF COARSE FRACTION PASSING NO. 4 SIEVE	SANDS WITH FINES (APPRECIABLE AMOUNTOF FINES)		SM	SILTY SANDS, SAND-SILT MIXTURES
				SC	CLAYEY SANDS, SAND-CLAY MIXTURES
FINE GRAINED SOILS	SILTS AND CLAYS	LIQUID LIMIT LESS THAN 50		ML	INORGANIC SILTS AND VERY FINE SANDS, ROCK FLOUR, SILTY OR CLAYEY FINE SANDS OR CLAYEY SILTS WITH SLIGHT PLASTICITY
				CL	INORGANIC CLAYS OF LOW TO MEDIUM PLASTICITY, GRAVELLY CLAYS, SANDY CLAYS, SILTY CLAYS, LEAN CLAYS
				OL	ORGANIC SILTS AND ORGANIC SILTY CLAYS OF LOW PLASTICITY
	SILTS AND CLAYS	LIQUID LIMIT GREATER THAN 50		MH	INORGANIC SILTS, MICACEOUS OR DIATOMACEOUS FINE SAND OR SILTY SOILS
MORE THAN 50% OF MATERIAL IS SMALLER THAN NO. 200 SIEVE SIZE				CH	INORGANIC CLAYS OF HIGH PLASTICITY, FAT CLAYS
				OH	ORGANIC CLAYS OF MEDIUM TO HIGH PLASTICITY, ORGANIC SILTS
HIGHLY ORGANIC SOILS				PT	PEAT, HUMUS, SWAMP SOILS WITH HIGH ORGANIC CONTENT

NOTE: DUAL SYMBOLS ARE USED TO INDICATE BORDERLINE SOIL CLASSIFICATIONS

UNIFIED SOIL CLASSIFICATION SYSTEM

Earth Systems

APPENDIX B

Laboratory Testing
Tabulated Laboratory Test Results
Individual Laboratory Test Results
Table 1809.7

LABORATORY TESTING

A. Samples were reviewed along with field logs to determine which would be analyzed further. Those chosen for laboratory analysis were considered representative of soils that would be exposed and/or used during grading, and those deemed to be within the influence of proposed structures. Test results are presented in graphic and tabular form in this Appendix.

B. In-situ Moisture Content and Unit Dry Weight for the ring samples were determined in general accordance with ASTM D 2937.

C. A maximum density test was performed to estimate the moisture-density relationship of typical soil materials. The test was performed in accordance with ASTM D 1557.

D. The relative strength characteristics of soils were determined from the results of Direct Shear tests on remolded samples. Specimens were placed in contact with water at least 24 hours before testing and were then sheared under normal loads ranging from 1 to 3 ksf in general accordance with ASTM D 3080.

E. Settlement characteristics were developed from the results of two one-dimensional consolidation tests performed in general accordance with ASTM D 2435. The samples were loaded to 0.5 ksf, flooded with water, and then incrementally loaded to 1.0, 2.0, 4.0 and 8.0 ksf. The samples were allowed to consolidate under each load increment. Rebound was measured under reverse alternate loading. Compression was measured by dial gauges accurate to 0.0001 inch. Results of the consolidation tests are presented as a curve plotting percent consolidation versus log of normal pressure, and a second curve plotting void ratio versus log of normal pressure.

F. An expansion index test was performed on a bulk soil sample in accordance with ASTM D 4829. The sample was surcharged under 144 pounds per square foot at moisture content of near 50% saturation. The sample was then submerged in water for 24 hours, and the amount of expansion was recorded with a dial indicator.

G. The Plasticity Index of selected samples was evaluated in accordance with ASTM D 4318

H. The gradation characteristics of selected samples were evaluated by hydrometer (in accordance with ASTM D 422) and sieve analysis procedures. The samples were soaked in water until individual soil particles were separated, then washed on the No. 200 mesh sieve, oven dried, weighed to calculate the percent passing the No. 200 sieve, and mechanically sieved. Additionally, a hydrometer analysis was performed to assess the distribution of the minus No. 200 mesh material of the sample. The hydrometer portion of the test was run using sodium hexametaphosphate as a dispersing agent.

I. Resistance ("R") Value tests were conducted on bulk samples secured during the field study. The tests were performed in accordance with California Method 301. Three

specimens at different moisture contents were tested for each sample, and the R-Value at 300 psi exudation pressure was determined from the plotted results

J. A portion of the bulk sample was sent to another laboratory for analyses of soil pH, resistivity, chloride contents, and sulfate contents. Soluble chloride and sulfate contents were determined on a dry weight basis. Resistivity testing was performed in accordance with California Test Method 424, wherein the ratio of soil to water was 1:3.

TABULATED LABORATORY TEST RESULTS

REMOLDED SAMPLES

BORING AND DEPTH	B-1 @ 0-5'
USCS	SM
MAXIMUM DRY DENSITY (pcf)	128.0 129.5*
OPTIMUM MOISTURE (%)	8.5 8.5
PEAK COHESION (psf)	250
PEAK FRICTION ANGLE	29°
ULTIMATE COHESION (psf)	90
ULTIMATE FRICTION ANGLE	31°
EXPANSION INDEX	0
pH	8.6
RESISTIVITY (ohms-cm)	7,100
SOLUBLE CHLORIDES (mg/Kg)	7.6
SOLUBLE SULFATES (mg/Kg)	66

*Corrected for Oversized Material (ASTM D4718)

BORING AND DEPTH	B-2 @ 35'	B-2 @ 45'	B-2 @ 60'
GRAIN SIZE DISTRIBUTION (%)			
GRAVEL	0.0	0.0	0.1
SAND	23.4	39.3	37.6
SILT	56.4	39.2	41.3
CLAY (2ym to 5ym)	6.2	6.1	4.8
CLAY (≤2ym)	14.0	15.4	16.2

BORING AND DEPTH	B-1 @ 30'	B-2 @ 35'	B-2 @ 45'
USCS	CL	ML	ML
LIQUID LIMIT	33	25	22
PLASTIC LIMIT	18	23	20
PLASTICITY INDEX	15	2	2

BORING AND DEPTH	B-2 @ 60'	B-3 @ 32.5'	B-3 @ 37.5'
USCS	ML	SM	ML
LIQUID LIMIT	23	18	20
PLASTIC LIMIT	21	18	20
PLASTICITY INDEX	2	0	0

TABULATED LABORATORY TEST RESULTS

BORING AND DEPTH	B-1 @ 5’	B-1 @ 15'	B-1 @ 30'	B-2 @ 5'
USCS	SM	SP/SM	CL	ML
SIEVE SIZE	%	%	%	%
1”	100	100	100	100
3/4”	100	100	100	100
1/2”	100	100	100	100
3/8”	100	100	100	100
#4	100	100	100	100
#8	100	100	100	97
#16	99	100	100	96
#30	97	100	100	94
#50	74	100	99	82
#100	35	100	92	62
#200	29.1	8.5	82.1	58.8

BORING AND DEPTH	B-2 @ 10’	B-2 @ 55'	B-3 @ 7.5'	B-3 @ 20'
USCS	SW	SM	SP	GW
SIEVE SIZE	%	%	%	%
1”	100	100	100	100
3/4”	100	100	100	71
1/2”	100	100	100	54
3/8”	100	100	87	36
#4	100	100	75	21
#8	100	100	64	14
#16	100	100	62	11
#30	100	99	60	7
#50	100	90	51	5
#100	100	68	6	3
#200	3.8	46.7	3	3

TABULATED LABORATORY TEST RESULTS

BORING AND DEPTH	B-3 @ 30’	B-3 @ 32.5'	B-3 @ 37.5'	B-3 @ 40'
USCS	ML	SM	ML	SM
SIEVE SIZE	%	%	%	%
1”	100	100	100	100
3/4”	100	100	100	100
1/2”	100	100	100	100
3/8”	100	100	100	100
#4	100	100	100	100
#8	100	100	100	100
#16	100	100	100	100
#30	100	100	100	79
#50	100	100	100	53
#100	100	100	100	39
#200	74	43	57	37

BORING AND DEPTH	B-3 @ 47.5’	B-3 @ 55'
USCS	SM	SM
SIEVE SIZE	%	%
1”	100	100
3/4”	100	100
1/2”	100	100
3/8”	100	100
#4	100	100
#8	98	100
#16	90	100
#30	79	100
#50	66	100
#100	51	100
#200	39	40

File Number: 306642-001 Lab Number: 098757

MAXIMUM DENSITY / OPTIMUM MOISTURE

ASTM D 1557-12 (Modified)

Job Name: Fire Station 7
Sample ID: B 1 @ 0-5'
Date: 6/12/2024
Description: Yellowish Brown Silty Sand

Procedure Used: A
Prep. Method: Moist
Rammer Type: Automatic

Maximum Density: **129.5 pcf**
Optimum Moisture: **8.5%**
Corrected for Oversize (ASTM D4718)

Sieve Size	% Retained
3/4"	0.0
3/8"	0.0
#4	7.9

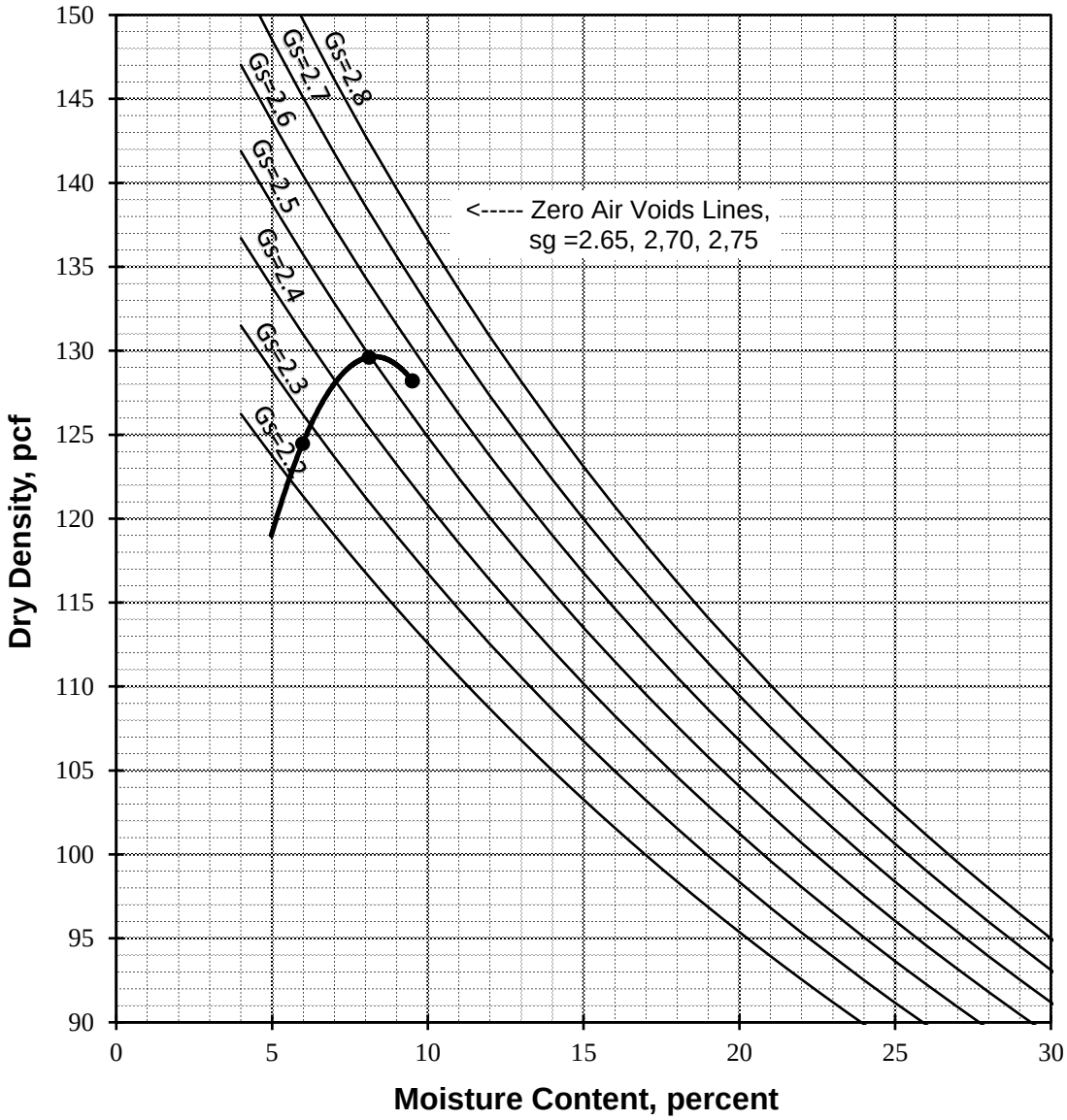

File Number: 306642-001 Lab Number: 098757

MAXIMUM DENSITY / OPTIMUM MOISTURE

ASTM D 1557-12 (Modified)

Job Name: Fire Station 7
Sample ID: B 1 @ 0-5'
Date: 6/12/2024
Description: Yellowish Brown Silty Sand

Procedure Used: A
Prep. Method: Moist
Rammer Type: Automatic

Maximum Density: **128 pcf**
Optimum Moisture: **8.5%**

Sieve Size	% Retained
3/4"	0.0
3/8"	0.0
#4	7.9

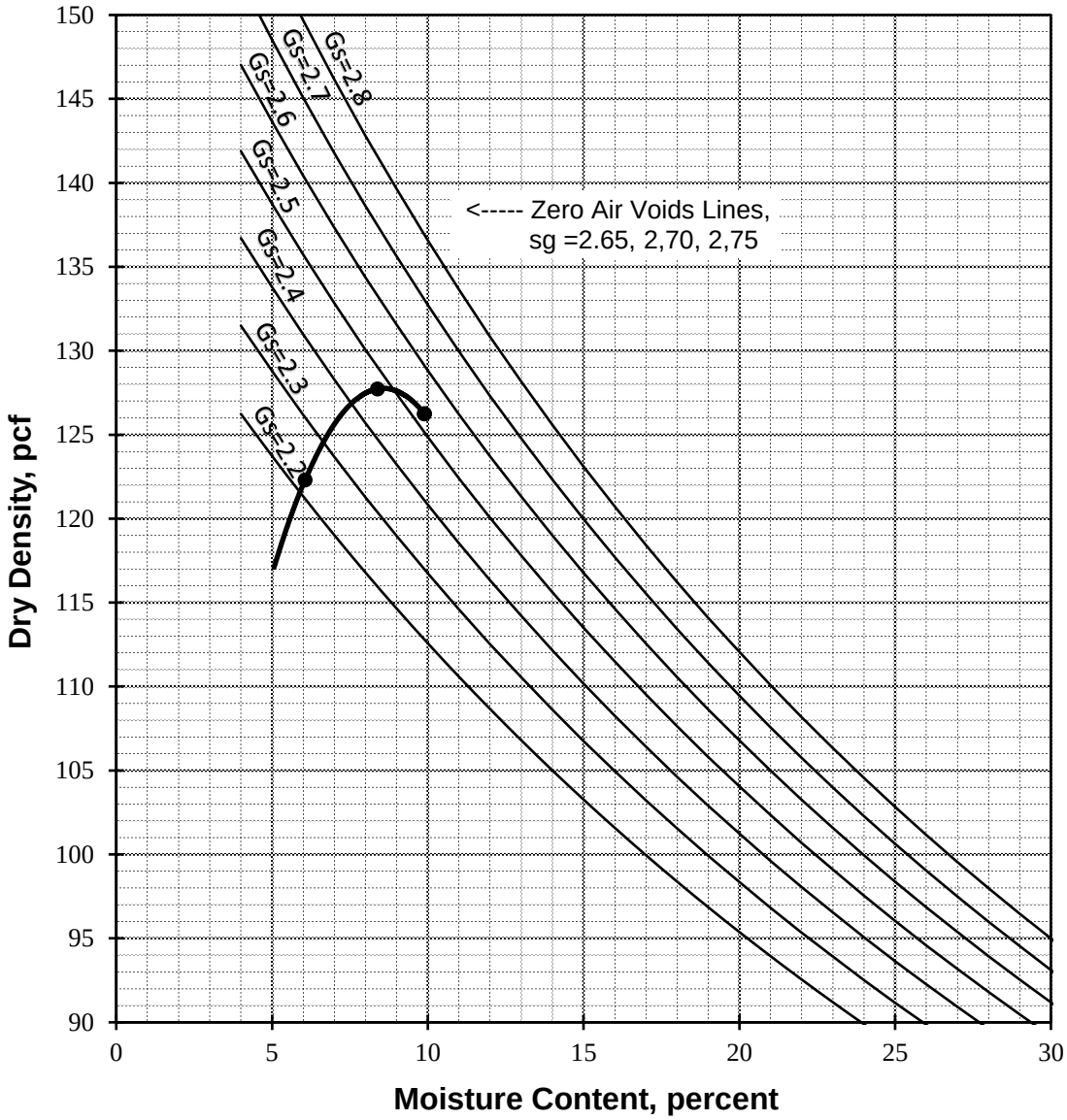

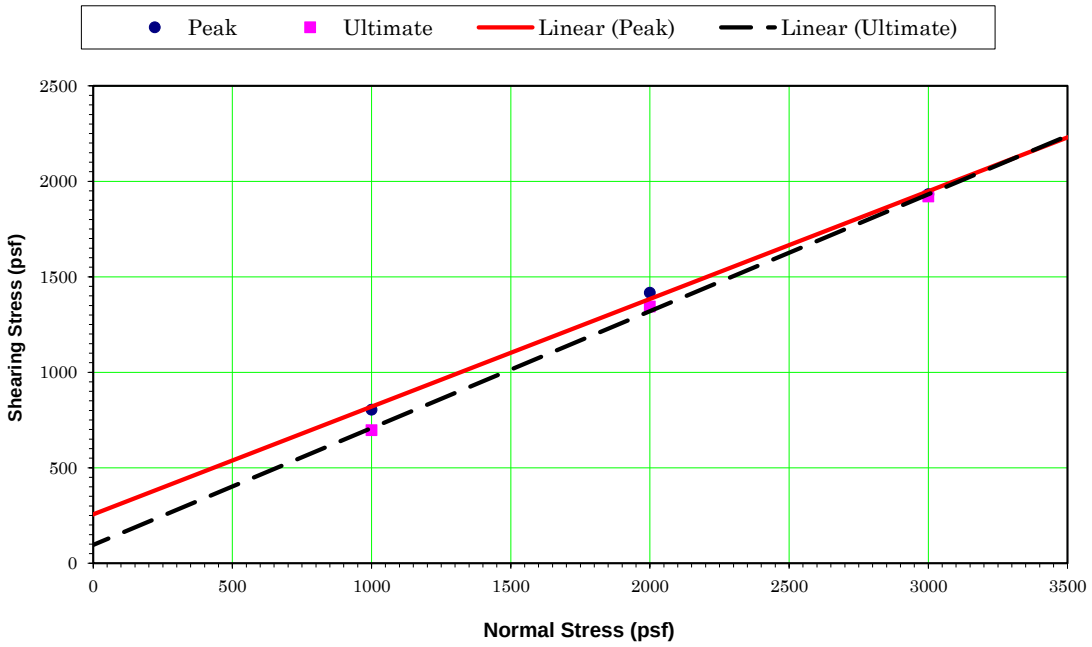

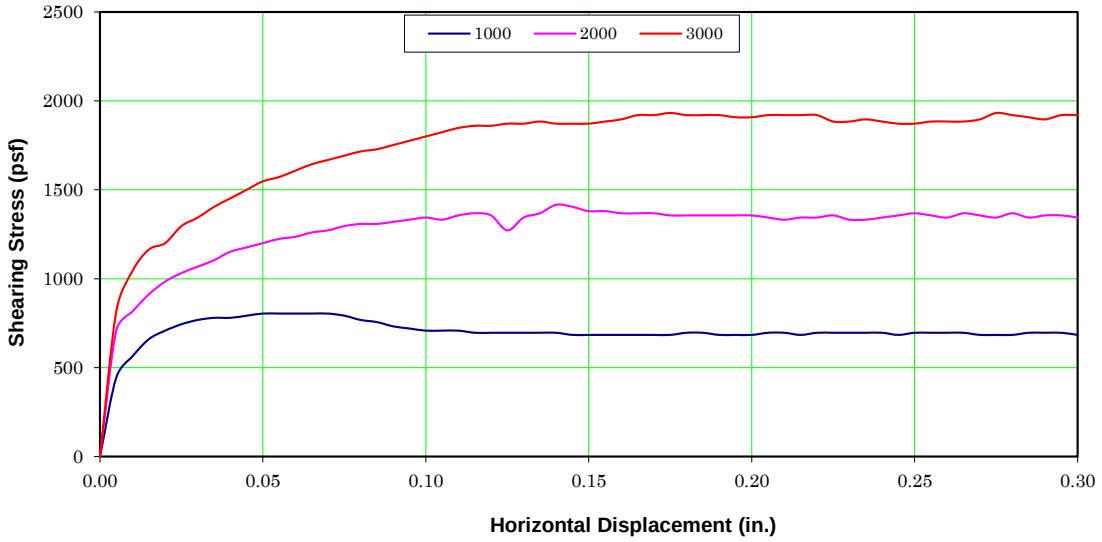

DIRECT SHEAR DATA*

Sample Location: B 1 @ 0-5'
Sample Description: Silty Sand
Dry Density (pcf): 114.5
Intial % Moisture: 8.6
Average Degree of Saturation: 96.8
Shear Rate (in/min): 0.005 in/min

Note: Sample specimens were initially saturated before testing by partially immersing the specimens in water for about 24 hours while the specimens were restrained from swelling. Initial saturation was not performed in the direct shear machine, and is not prescribed by ASTM D 3080.

Normal stress (psf)	1000	2000	3000
Peak stress (psf)	804	1416	1932
Ultimate stress (psf)	696	1344	1920

	Peak	Ultimate
ϕ Angle of Friction (degrees):	29	31
c Cohesive Strength (psf):	250	90

Test Type: Peak & Ultimate

* Test Method: ASTM D-3080

DIRECT SHEAR TEST

Fire Station 7

Earth

7/24/2024 | 306642-001

CONSOLIDATION TEST

ASTM D 2435-90

Fire Station 7
B 2 @ 5'
ML
Ring Sample

Initial Dry Density: 79.7 pcf
Initial Moisture, %: 33.8%
Specific Gravity: 2.67 (assume
Initial Void Ratio: 1.092

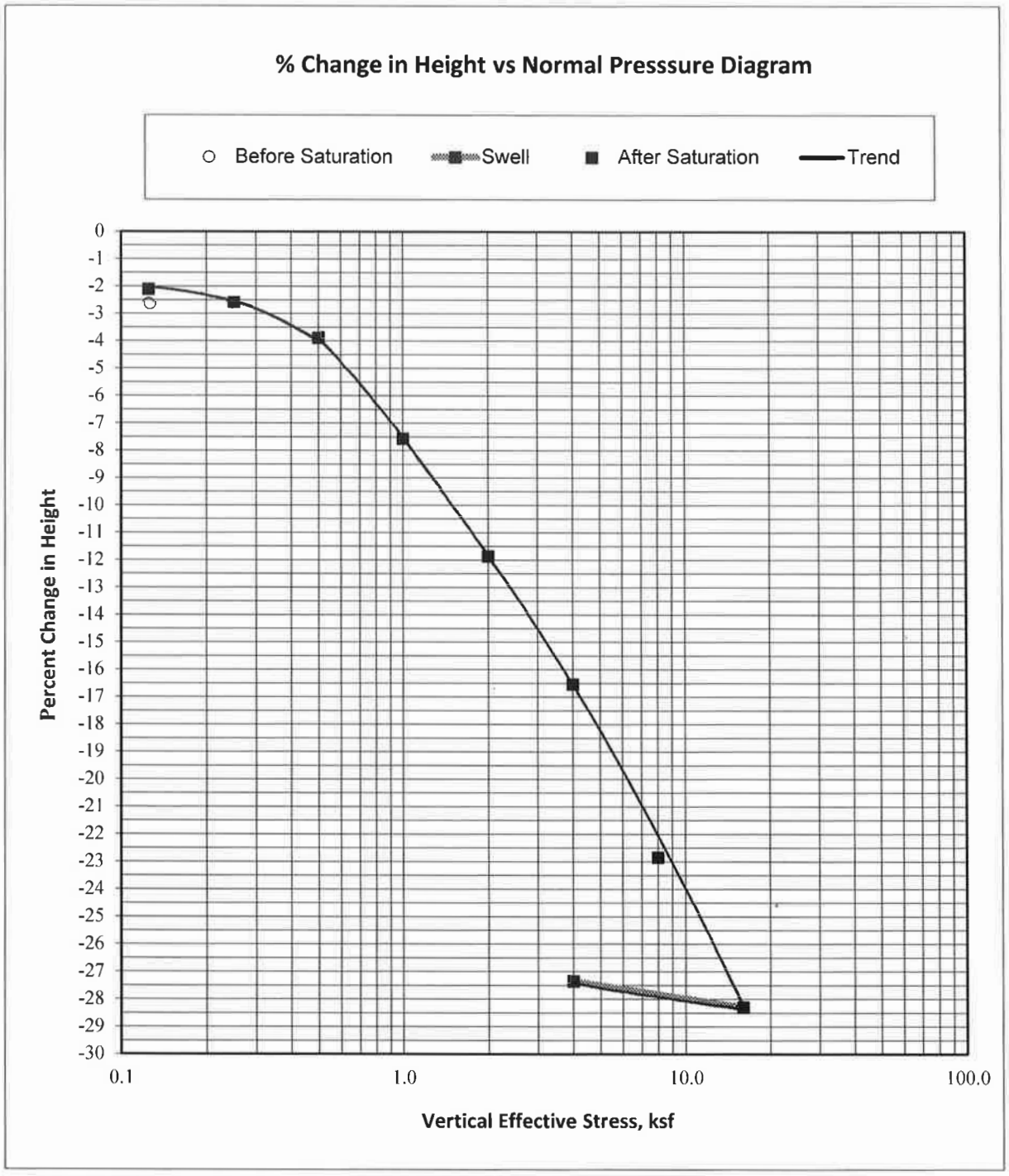

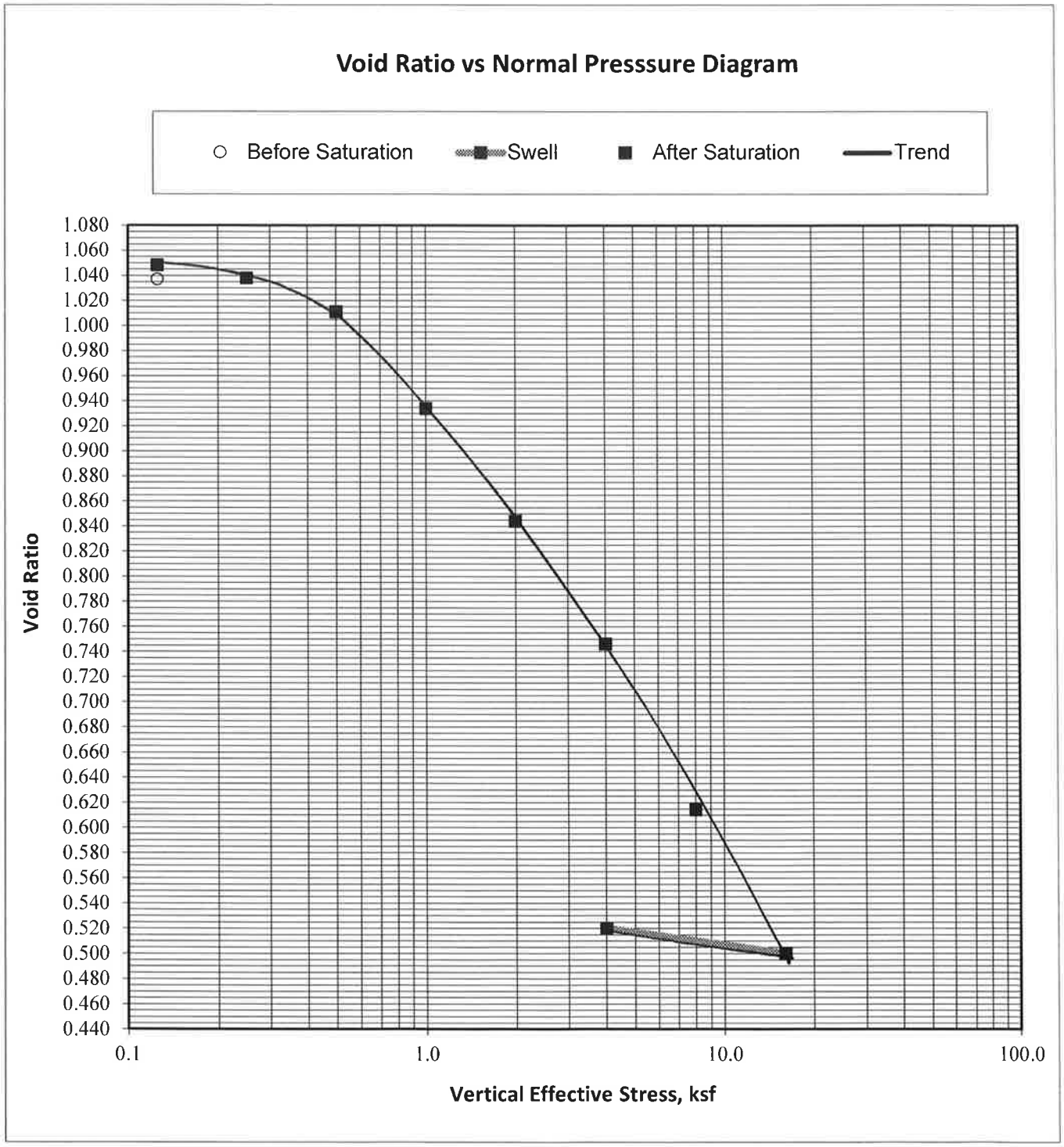
Void Ratio vs Normal Presssure Diagram
Before Saturation
Swell
After Saturation
Trend
Void Ratio
1.080
1.060
1.040
1.020
1.000
0.980
0.960
0.940
0.920
0.900
0.880
0.860
0.840
0.820
0.800
0.780
0.760
0.740
0.720
0.700
0.680
0.660
0.640
0.620
0.600
0.580
0.560
0.540
0.520
0.500
0.480
0.460
0.440
0.1
1.0
10.0
100.0
Vertical Effective Stress, ksf

File No.: 306642-001

EXPANSION INDEX

ASTM D-4829, UBC 18-2

Job Name: Fire Station 7
Sample ID: B 1 @ 0-5'
Soil Description: SM

Initial Moisture, %:	7.7
Initial Compacted Dry Density, pcf:	118.4
Initial Saturation, %:	50
Final Moisture, %:	20.5
Volumetric Swell, %:	0.0
Expansion Index:	**0** **Very Low**

EI	UBC Classification
0-20	Very Low
21-50	Low
51-90	Medium
91-130	High
130+	Very High

File No.: 306642-001 June 11, 2024

PLASTICITY INDEX

ASTM D-4318

Job Name: Fire Station 7
Sample ID: B 1 @ 30'
Soil Description: CL

DATA SUMMARY				TEST RESULTS	
Number of Blows:	16	29	30	**LIQUID LIMIT**	**33**
Water Content, %	36.4	32.7	32.5	**PLASTIC LIMIT**	**18**
Plastic Limit:	17.9	17.6		**PLASTICITY INDEX**	**15**

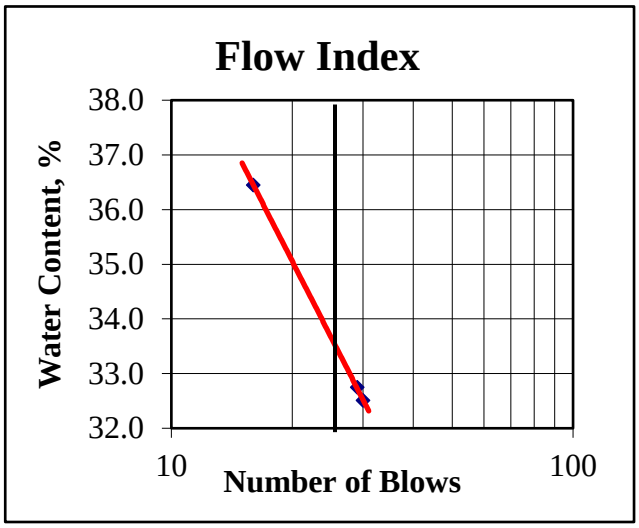

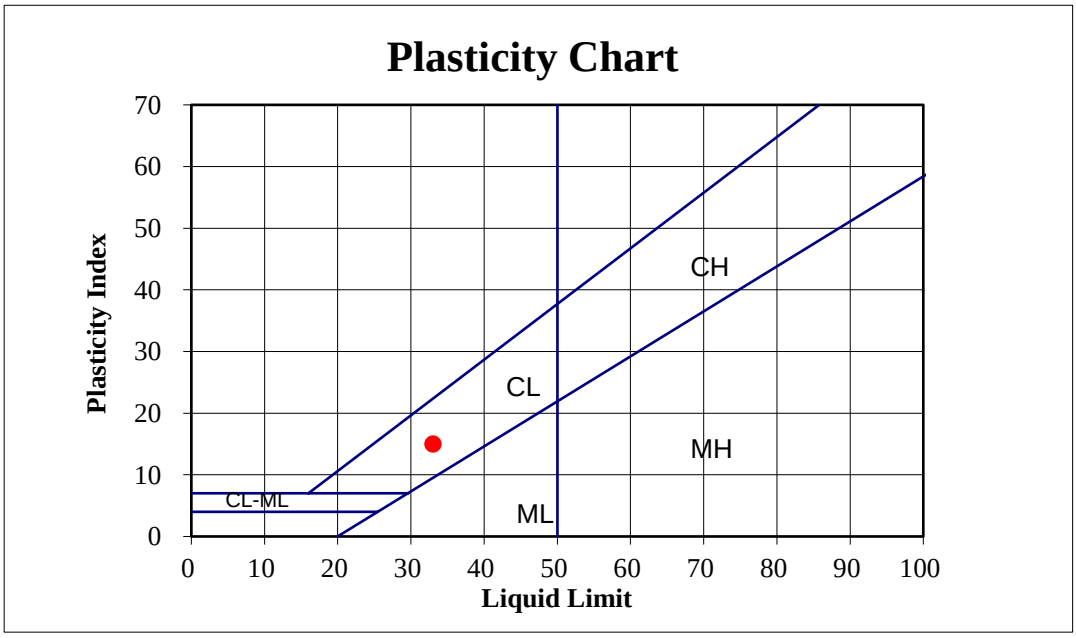

File No.: 306642-001 June 11, 2024

PLASTICITY INDEX

ASTM D-4318

Job Name: Fire Station 7
Sample ID: B 2 @ 35'
Soil Description: ML

DATA SUMMARY				TEST RESULTS	
Number of Blows:	11	24	27	**LIQUID LIMIT**	**25**
Water Content, %	27.1	25.0	24.7	**PLASTIC LIMIT**	**23**
Plastic Limit:	22.7	23.0		**PLASTICITY INDEX**	**2**

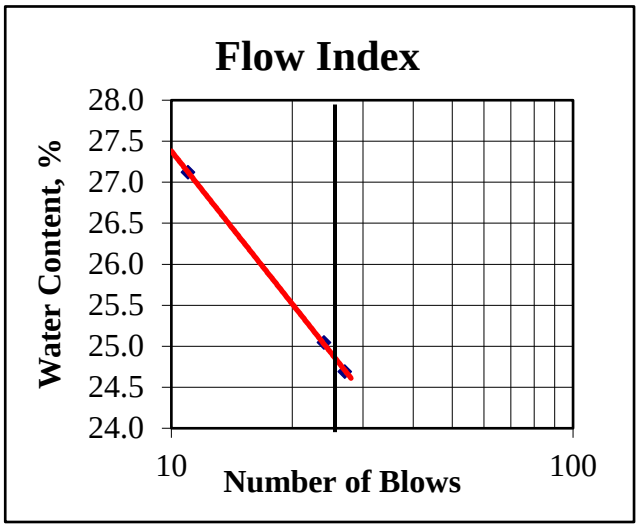

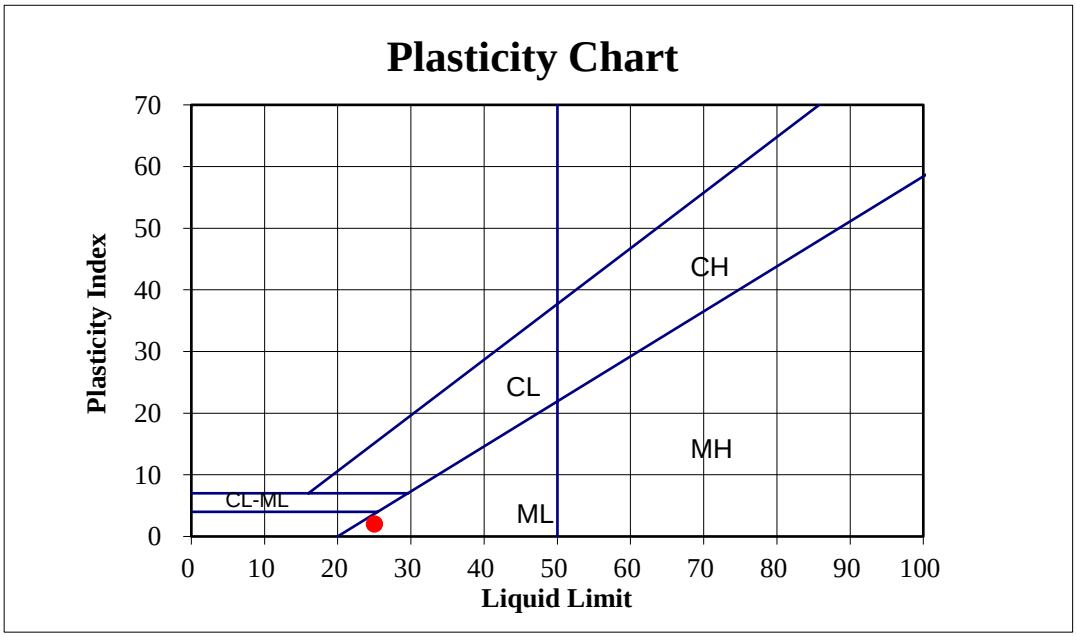

File No.: 306642-001 June 11, 2024

PLASTICITY INDEX

ASTM D-4318

Job Name: Fire Station 7
Sample ID: B 2 @ 45'
Soil Description: ML

DATA SUMMARY				TEST RESULTS	
Number of Blows:	12	17	25	**LIQUID LIMIT**	**22**
Water Content, %	23.7	22.7	21.7	**PLASTIC LIMIT**	**20**
Plastic Limit:	20.2	20.1		**PLASTICITY INDEX**	**2**

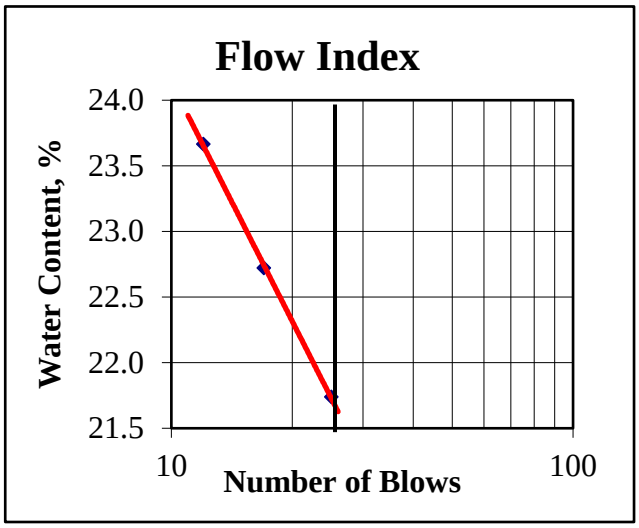

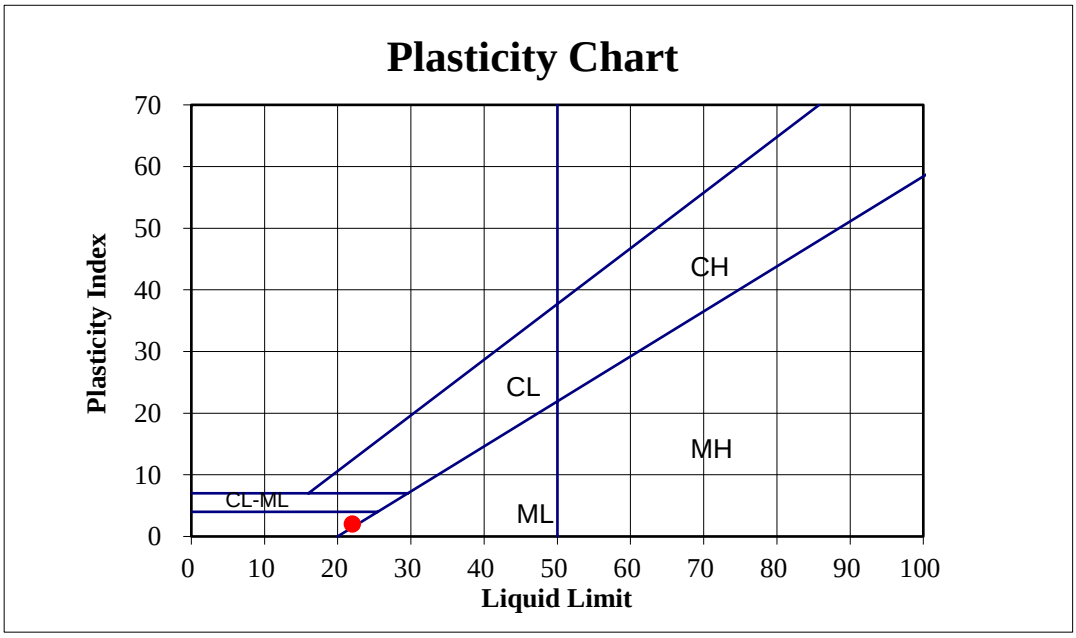

File No.: 306642-001 June 11, 2024

PLASTICITY INDEX

ASTM D-4318

Job Name: Fire Station 7
Sample ID: B 2 @ 60'
Soil Description: ML

DATA SUMMARY				TEST RESULTS	
Number of Blows:	14	20	30	**LIQUID LIMIT**	**23**
Water Content, %	24.2	23.3	21.9	**PLASTIC LIMIT**	**21**
Plastic Limit:	20.4	20.8		**PLASTICITY INDEX**	**2**

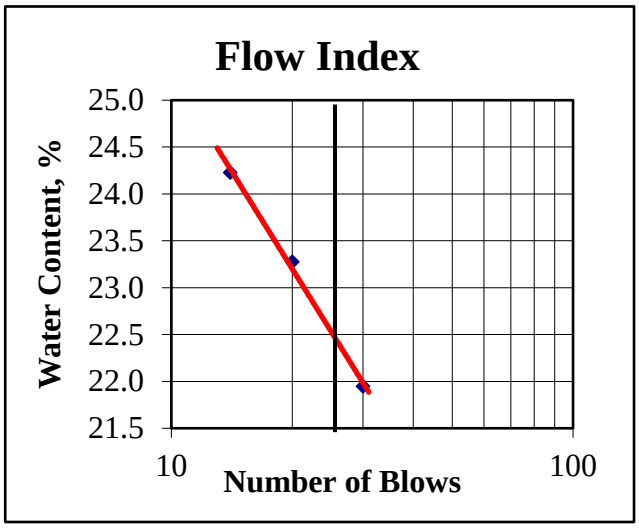

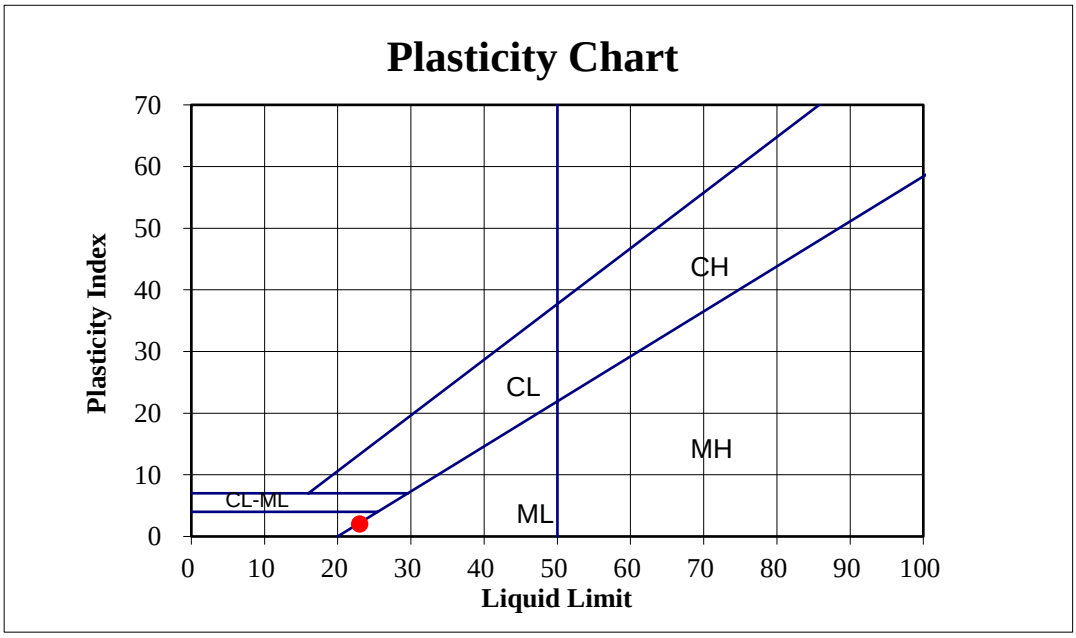

File No.: 306642-001 July 17, 2024

PLASTICITY INDEX

ASTM D-4318

Job Name: Fire Station No. 7
Sample ID: B 3 @ 32.5'
Soil Description: SM

DATA SUMMARY				TEST RESULTS	
Number of Blows:	10	15	29	**LIQUID LIMIT**	**18**
Water Content, %	20.2	19.4	17.4	**PLASTIC LIMIT**	**18**
Plastic Limit:	17.9	17.4		**PLASTICITY INDEX**	**0**

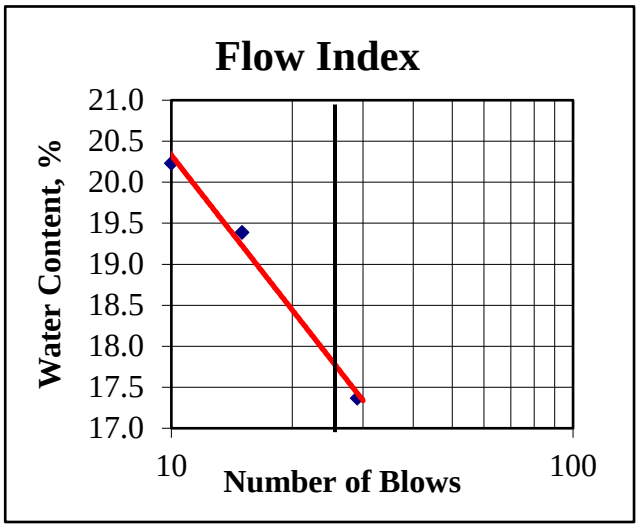

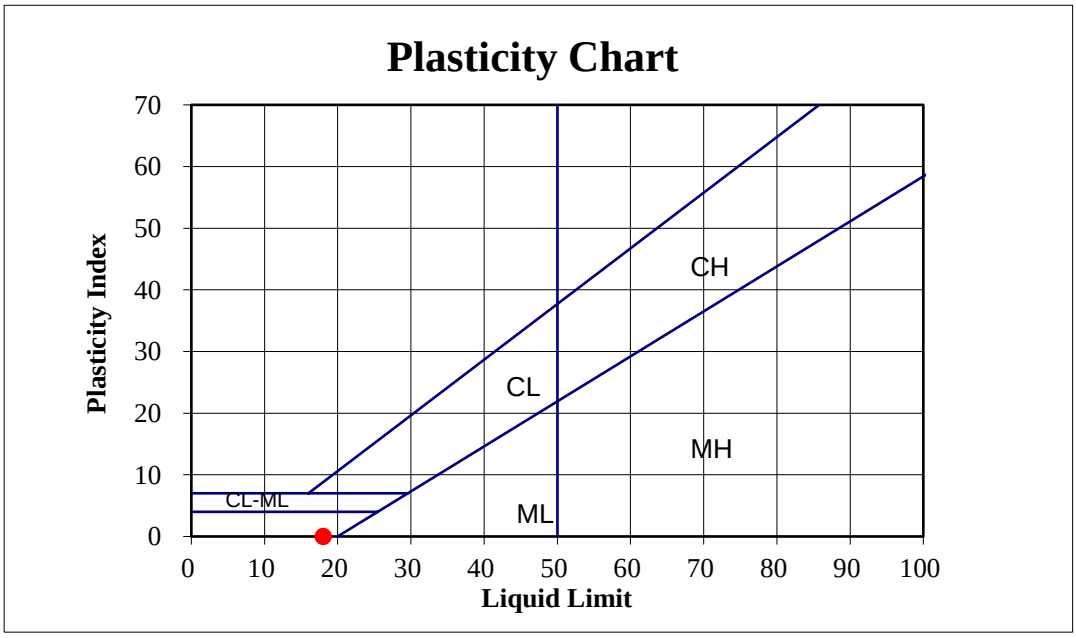

File No.: 306642-001 July 17, 2024

PLASTICITY INDEX

ASTM D-4318

Job Name: Fire Station No. 7
Sample ID: B 3 @ 37.5'
Soil Description: ML

DATA SUMMARY				TEST RESULTS	
Number of Blows:	21	24	25	**LIQUID LIMIT**	**20**
Water Content, %	21.0	20.6	20.3	**PLASTIC LIMIT**	**20**
Plastic Limit:	20.1	20.2		**PLASTICITY INDEX**	**0**

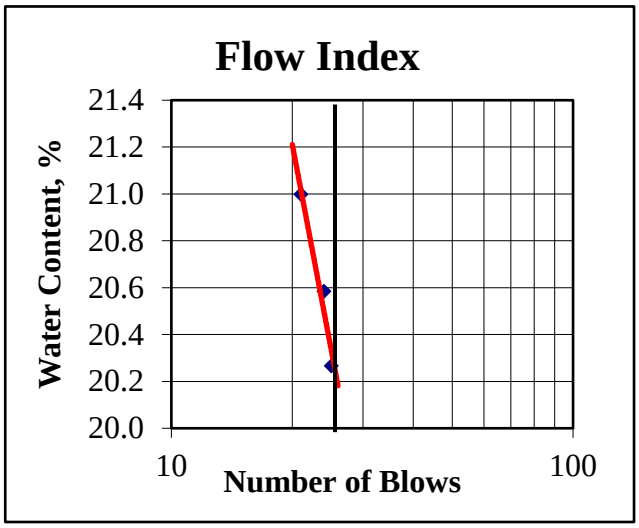

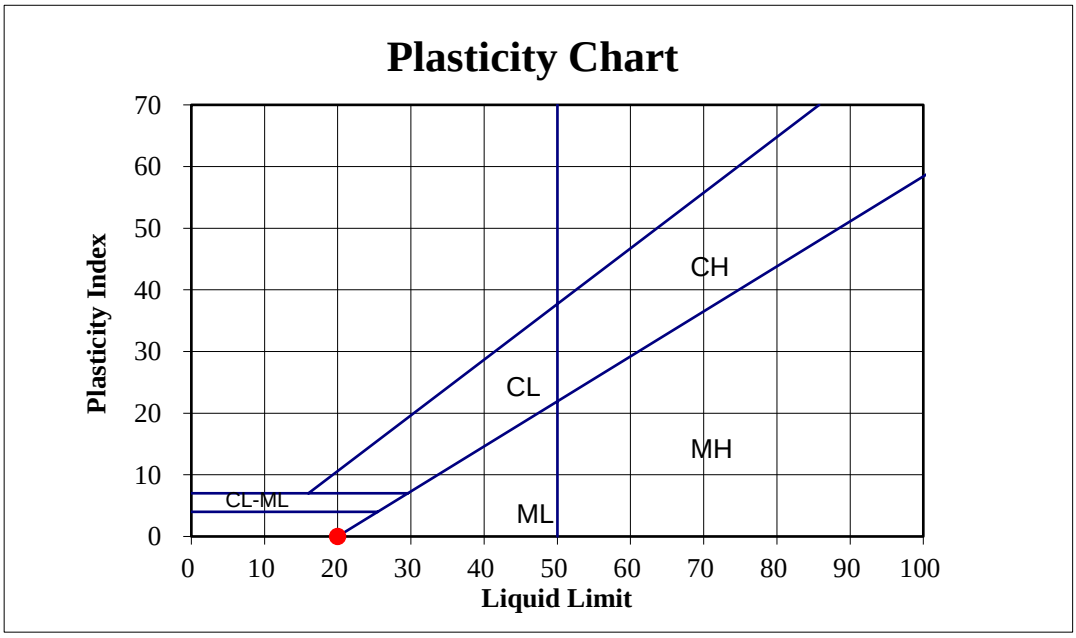

SIEVE ANALYSIS

ASTM C-136

Job Name: 306642-001
Sample ID: B 1 @ 5'
Description: SM

Sieve Size	% Passing
3"	100
2"	100
1-1/2"	100
1"	100
3/4"	100
1/2"	100
3/8"	100
#4	100
#8	100
#16	99
#30	97
#50	74
#100	35
#200	29.1

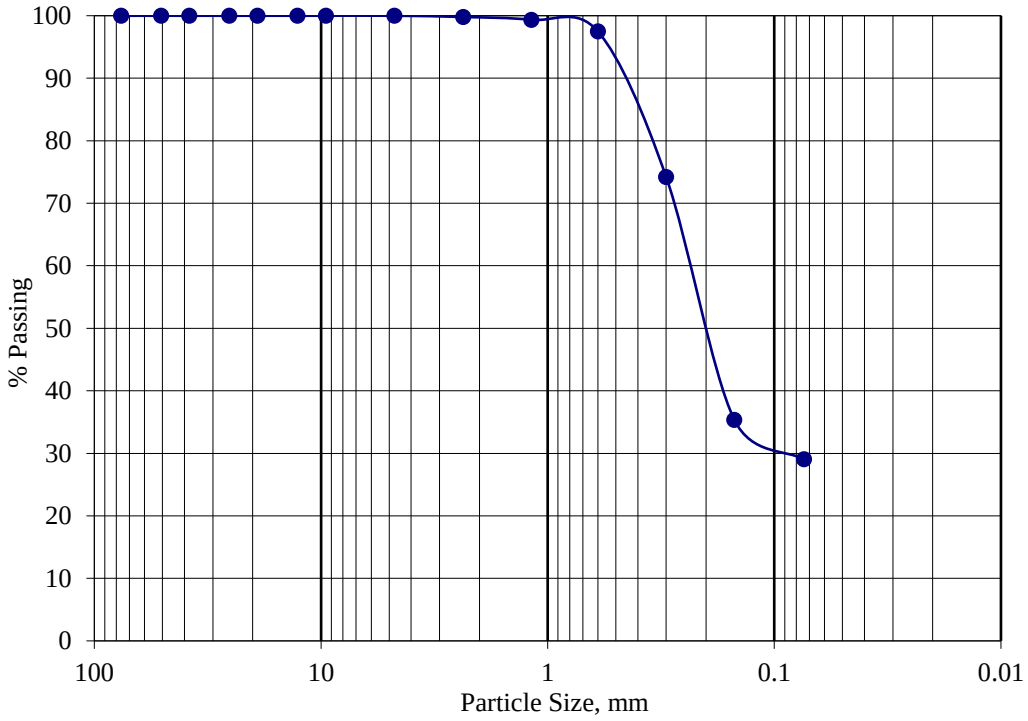

SIEVE ANALYSIS

ASTM C-136

Job Name: 306642-001
Sample ID: B 1 @ 15'
Description: SP-SM

Sieve Size	% Passing
3"	100
2"	100
1-1/2"	100
1"	100
3/4"	100
1/2"	100
3/8"	100
#4	100
#8	100
#16	100
#30	100
#50	100
#100	100
#200	8.5

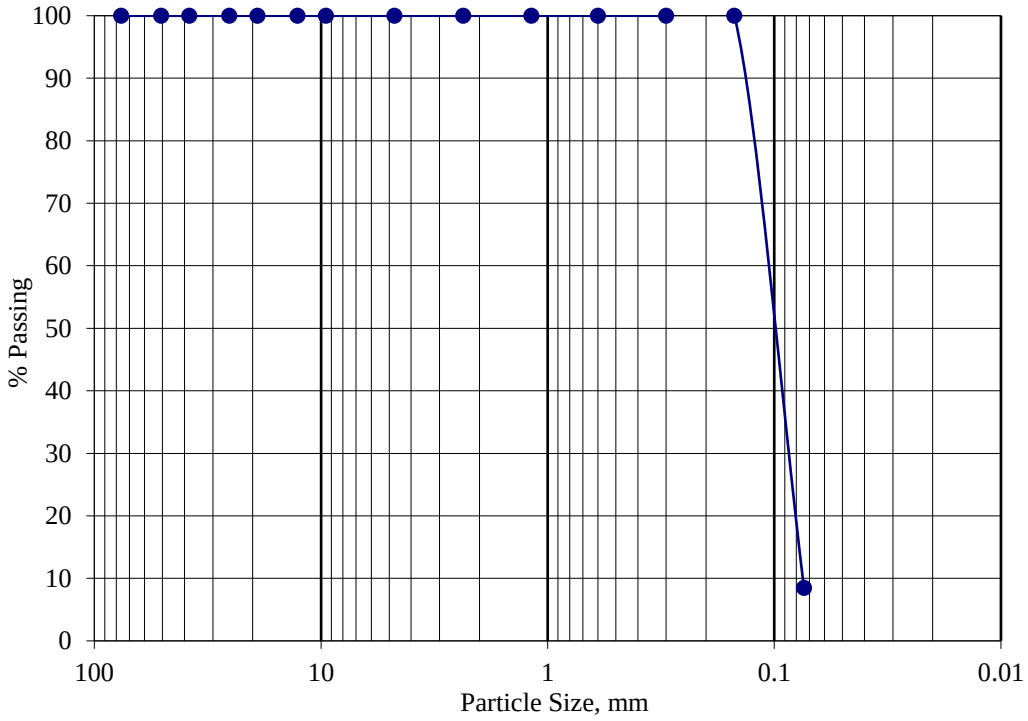

SIEVE ANALYSIS

ASTM C-136

Job Name: 306642-001
Sample ID: B 3 @ 47.5'
Description: SM

Sieve Size	% Passing
3"	100
2"	100
1-1/2"	100
1"	100
3/4"	100
1/2"	100
3/8"	100
#4	100
#8	98
#16	90
#30	79
#50	66
#100	51
#200	39

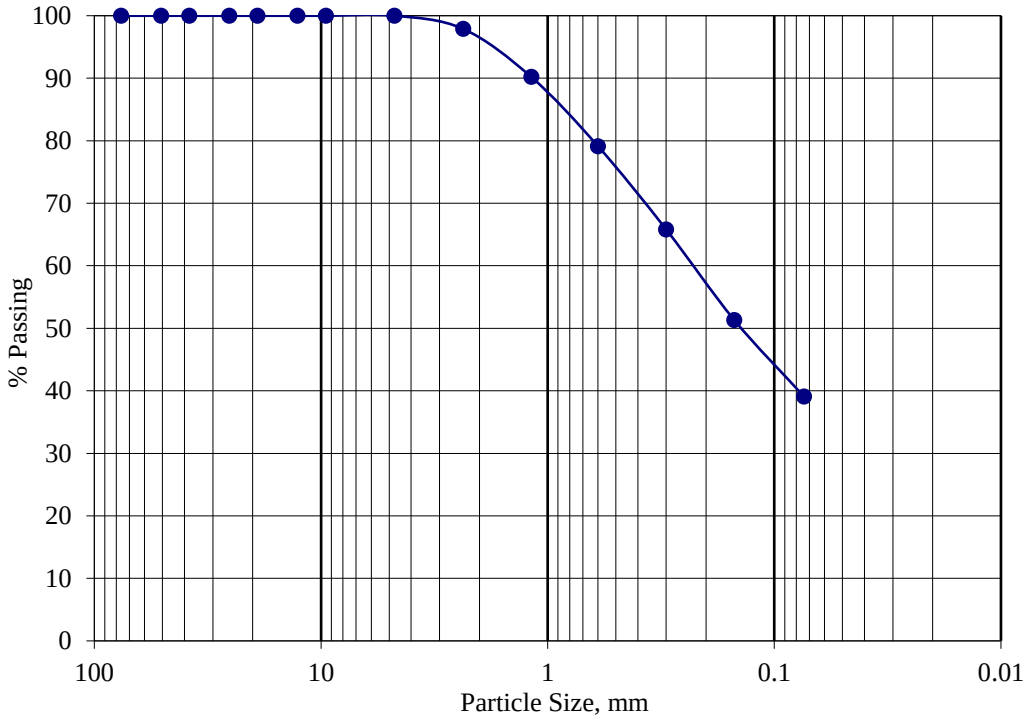

SIEVE ANALYSIS

ASTM C-136

Job Name: 306642-001
Sample ID: B 1 @ 30'
Description: CL

Sieve Size	% Passing
3"	100
2"	100
1-1/2"	100
1"	100
3/4"	100
1/2"	100
3/8"	100
#4	100
#8	100
#16	100
#30	100
#50	99
#100	92
#200	82.1

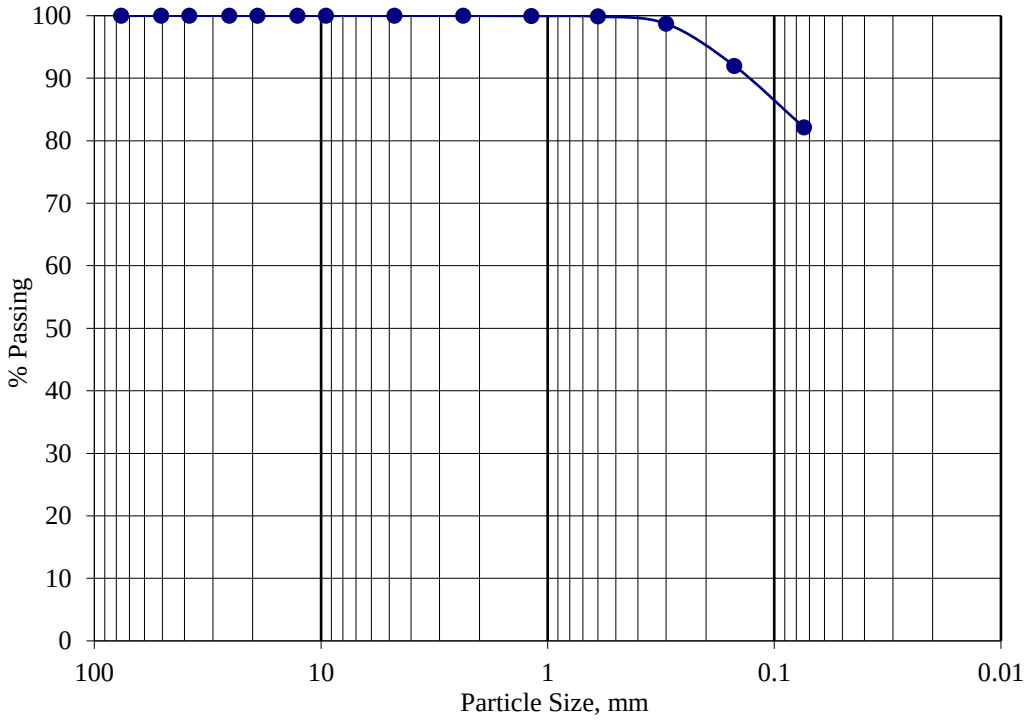

SIEVE ANALYSIS

ASTM C-136

Job Name: 306642-001
Sample ID: B 2 @ 5'
Description: ML

Sieve Size	% Passing
3"	100
2"	100
1-1/2"	100
1"	100
3/4"	100
1/2"	100
3/8"	100
#4	100
#8	97
#16	96
#30	94
#50	82
#100	62
#200	58.8

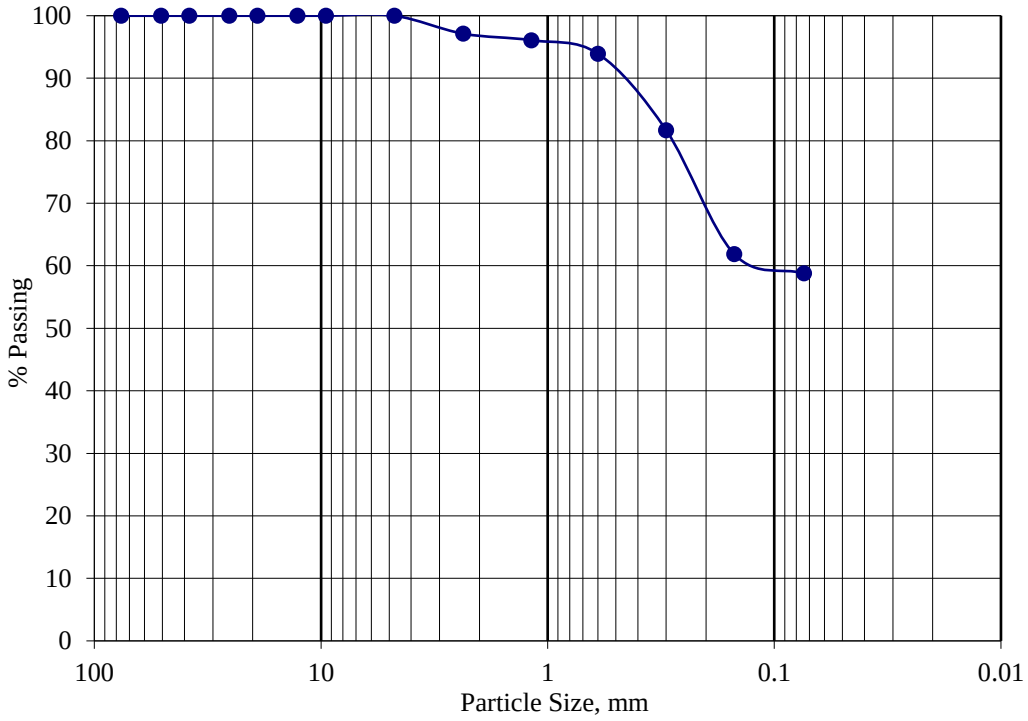

SIEVE ANALYSIS

ASTM C-136

Job Name: 306642-001
Sample ID: B 2 @ 10'
Description: SW

Sieve Size	% Passing
3"	100
2"	100
1-1/2"	100
1"	100
3/4"	100
1/2"	100
3/8"	100
#4	100
#8	100
#16	100
#30	100
#50	100
#100	100
#200	3.8

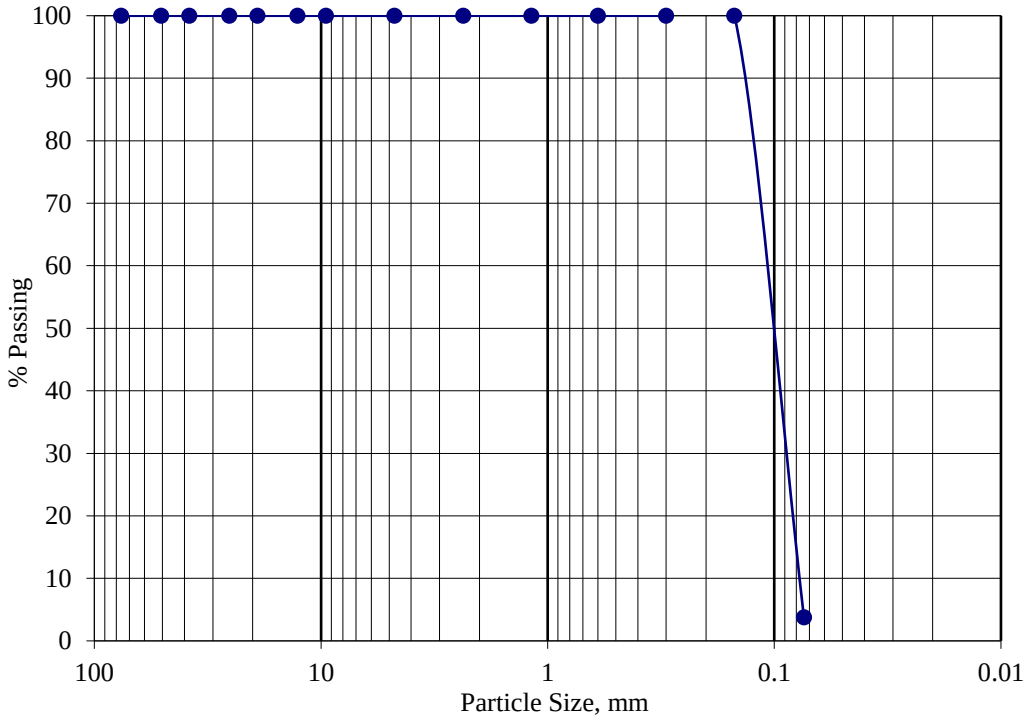

SIEVE ANALYSIS

ASTM C-136

Job Name: 306642-001
Sample ID: B 2 @ 55'
Description: SM

Sieve Size	% Passing
3"	100
2"	100
1-1/2"	100
1"	100
3/4"	100
1/2"	100
3/8"	100
#4	100
#8	100
#16	100
#30	99
#50	90
#100	68
#200	46.7

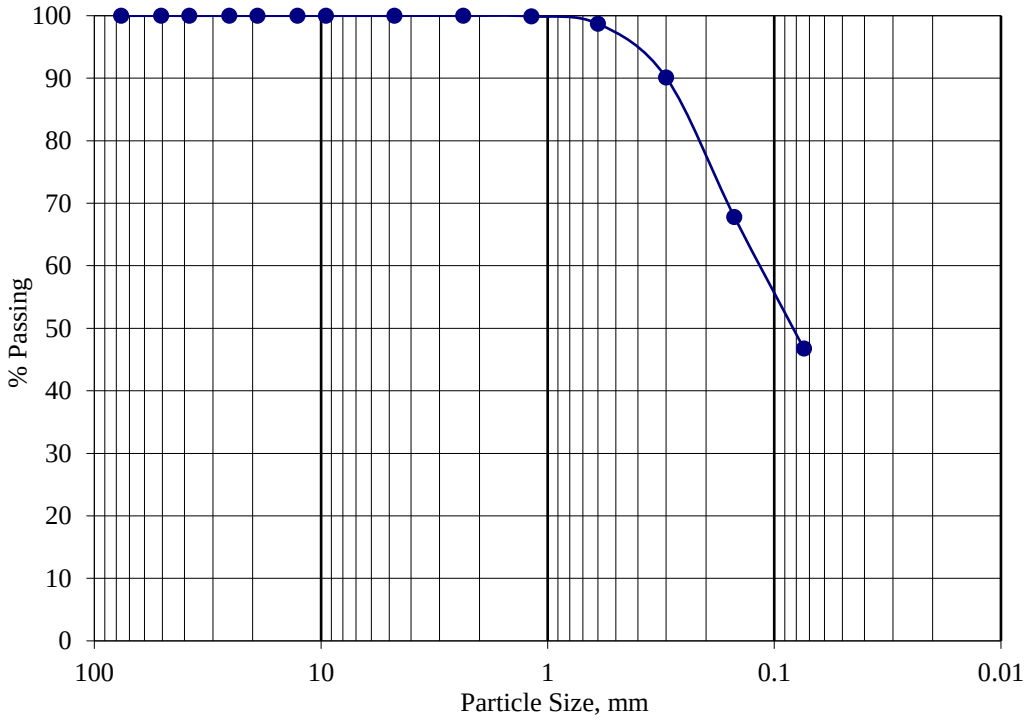

SIEVE ANALYSIS

ASTM C-136

Job Name: 306642-001
Sample ID: B 3 @ 7.5'
Description: SP

Sieve Size	% Passing
3"	100
2"	100
1-1/2"	100
1"	100
3/4"	100
1/2"	100
3/8"	87
#4	75
#8	64
#16	62
#30	60
#50	51
#100	6
#200	3

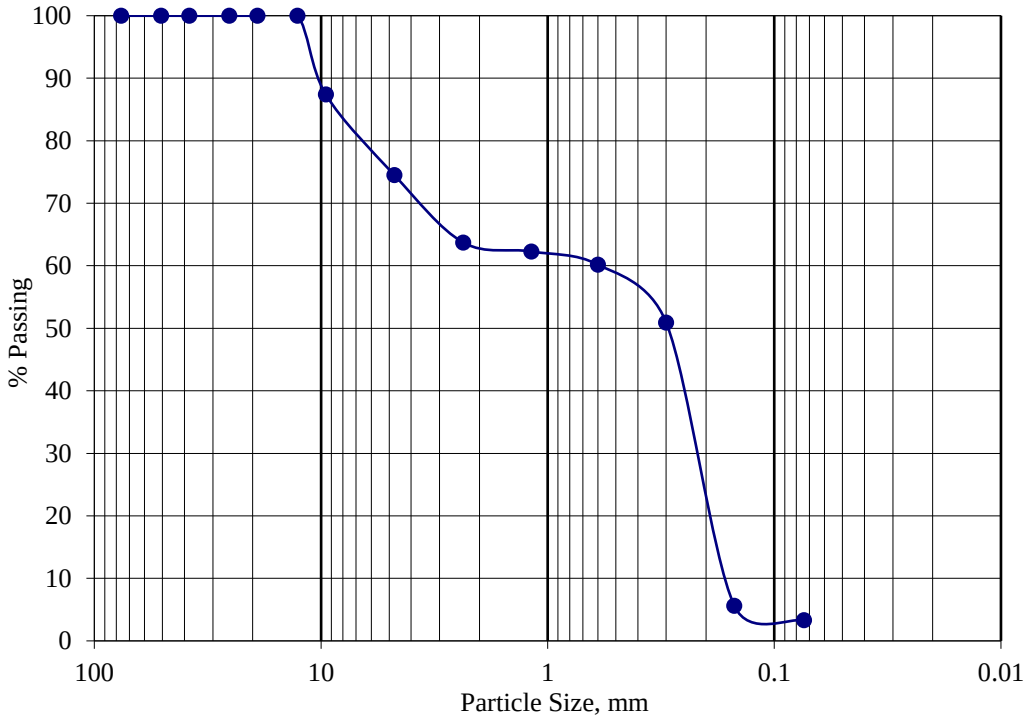

SIEVE ANALYSIS

ASTM C-136

Job Name: 306642-001
Sample ID: B 3 @ 20'
Description: GW

Sieve Size	% Passing
3"	100
2"	100
1-1/2"	100
1"	100
3/4"	71
1/2"	54
3/8"	36
#4	21
#8	14
#16	11
#30	7
#50	5
#100	3
#200	3

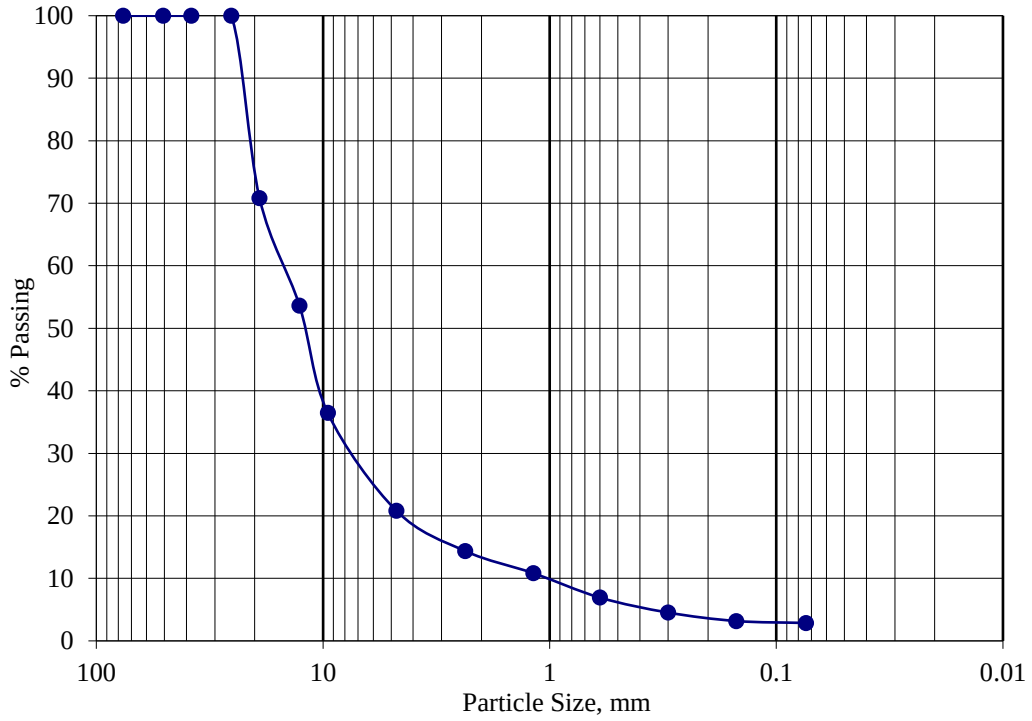

SIEVE ANALYSIS

ASTM C-136

Job Name: 306642-001
Sample ID: B 3 @ 30
Description: ML

Sieve Size	% Passing
3"	100
2"	100
1-1/2"	100
1"	100
3/4"	100
1/2"	100
3/8"	100
#4	100
#8	100
#16	100
#30	100
#50	100
#100	100
#200	74

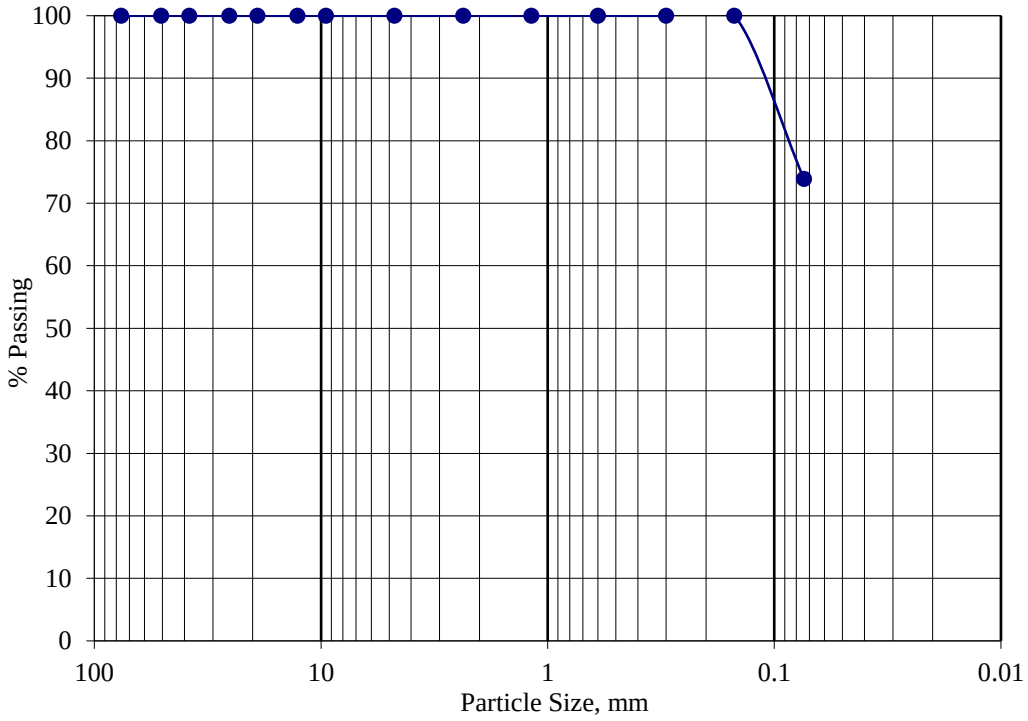

SIEVE ANALYSIS

ASTM C-136

Job Name: 306642-001
Sample ID: B 3 @ 32.5
Description: SM

Sieve Size	% Passing
3"	100
2"	100
1-1/2"	100
1"	100
3/4"	100
1/2"	100
3/8"	100
#4	100
#8	100
#16	100
#30	100
#50	100
#100	100
#200	43

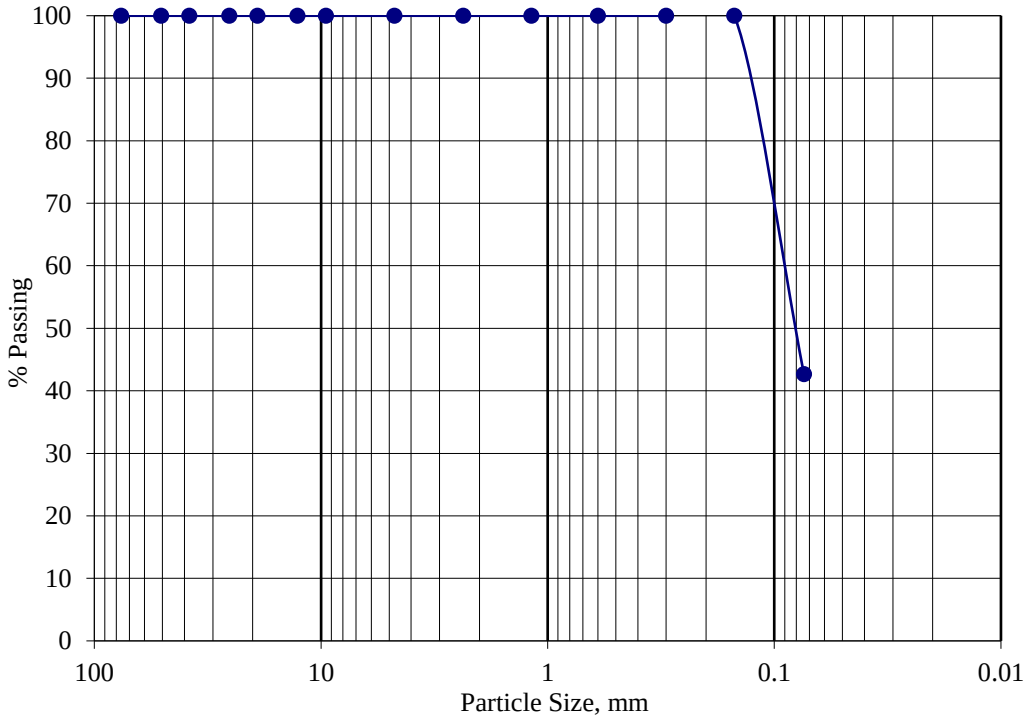

SIEVE ANALYSIS

ASTM C-136

Job Name: 306642-001
Sample ID: B 3 @ 37.5
Description: ML

Sieve Size	% Passing
3"	100
2"	100
1-1/2"	100
1"	100
3/4"	100
1/2"	100
3/8"	100
#4	100
#8	100
#16	100
#30	100
#50	100
#100	100
#200	57

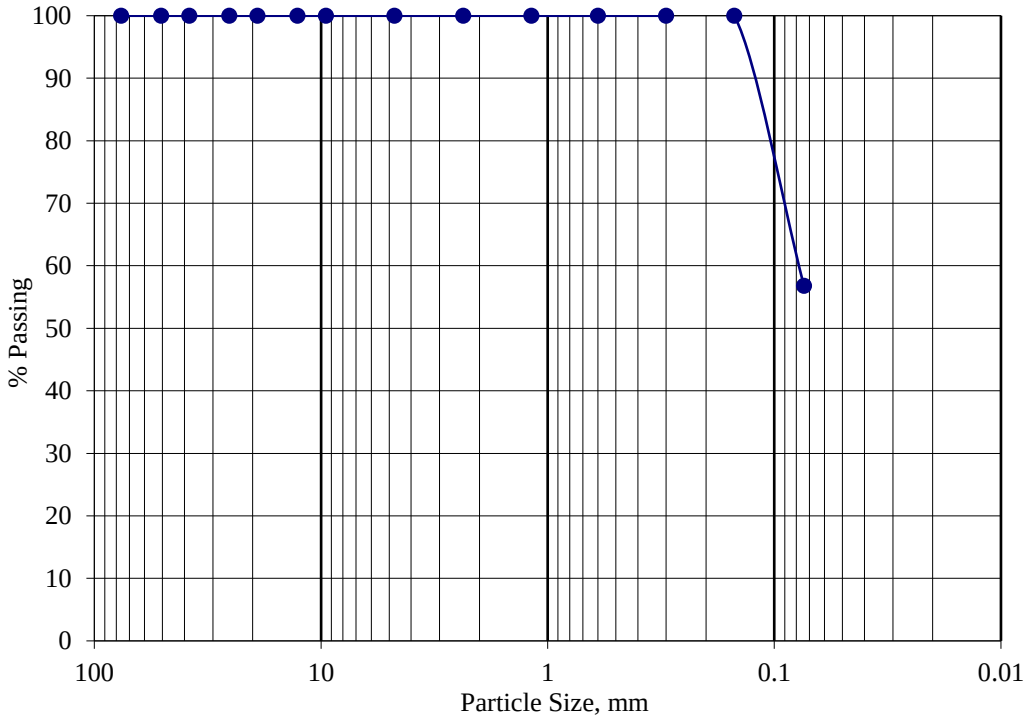

SIEVE ANALYSIS

ASTM C-136

Job Name: 306642-001
Sample ID: B 3 @ 40'
Description: SM

Sieve Size	% Passing
3"	100
2"	100
1-1/2"	100
1"	100
3/4"	100
1/2"	100
3/8"	100
#4	100
#8	100
#16	100
#30	79
#50	53
#100	39
#200	37

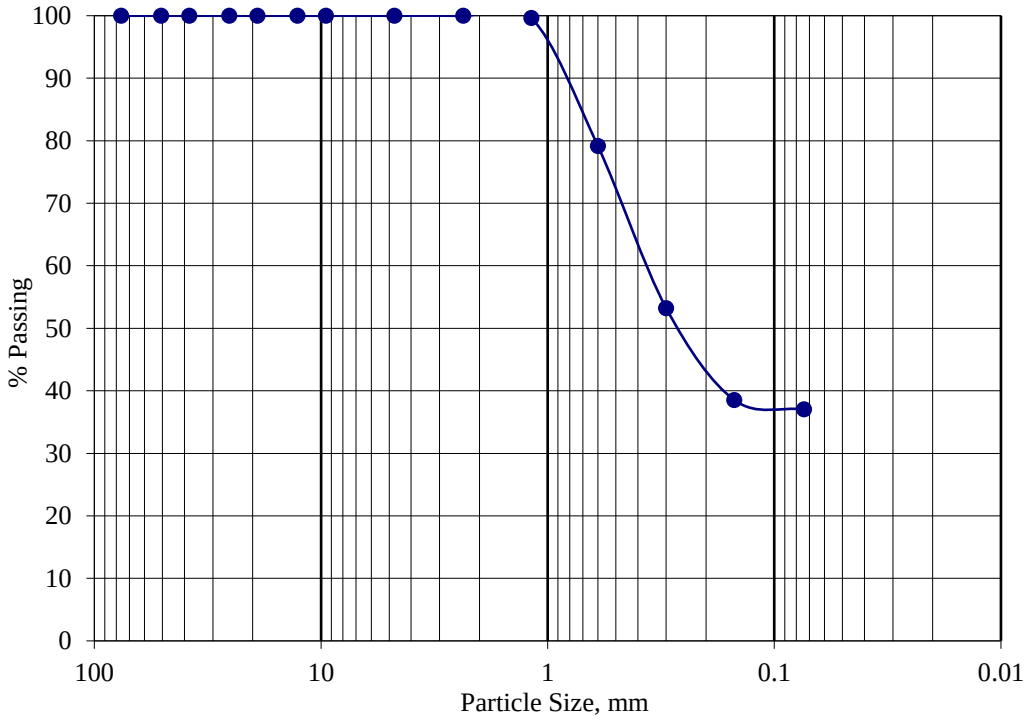

SIEVE ANALYSIS

ASTM C-136

Job Name: 306642-001
Sample ID: B 3 @ 47.5'
Description: SM

Sieve Size	% Passing
3"	100
2"	100
1-1/2"	100
1"	100
3/4"	100
1/2"	100
3/8"	100
#4	100
#8	98
#16	90
#30	79
#50	66
#100	51
#200	39

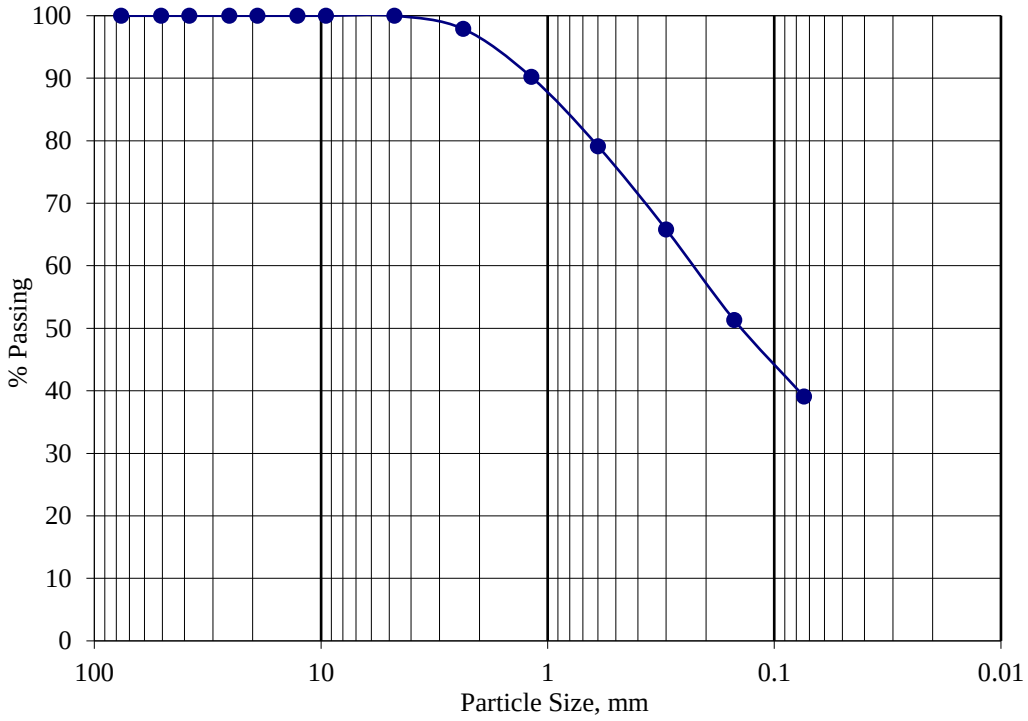

SIEVE ANALYSIS

ASTM C-136

Job Name: 306642-001
Sample ID: B 3 @ 55
Description: SM

Sieve Size	% Passing
3"	100
2"	100
1-1/2"	100
1"	100
3/4"	100
1/2"	100
3/8"	100
#4	100
#8	100
#16	100
#30	100
#50	100
#100	100
#200	40

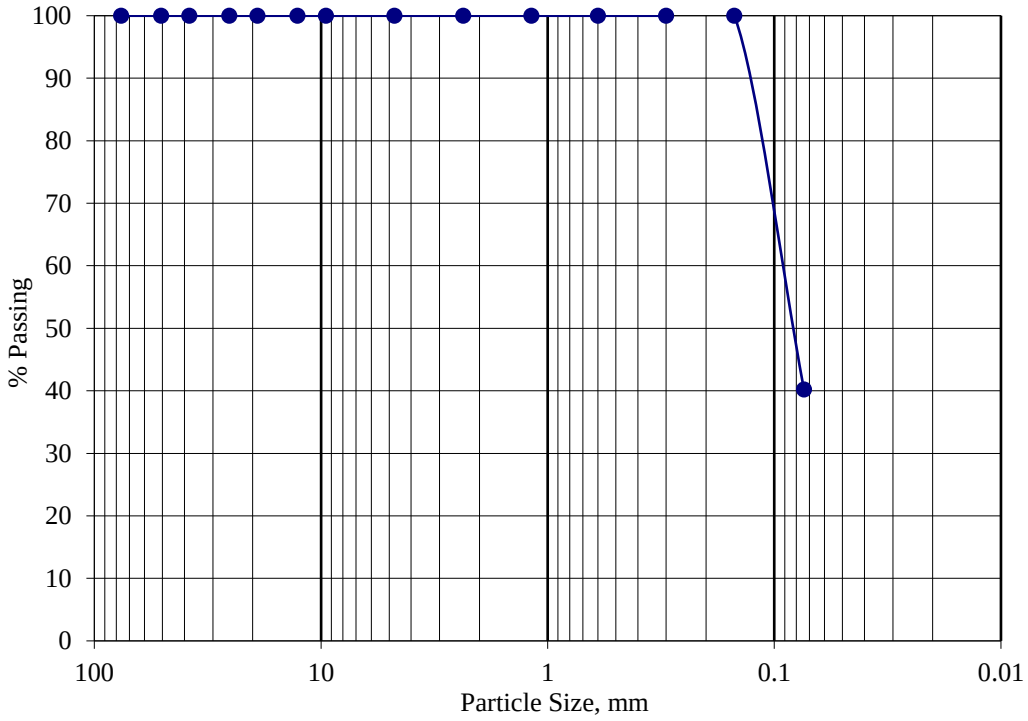

MECHANICAL ANALYSIS

CTM 203-08

Job Name:	Fire Station 7
Job No.:	306642-001
Sample ID:	**B 2 @ 35'**
Soil Description:	**ML**
Hydrometer ID:	504229

Hydroscopic Moisture

Air Dry Wt, g:	100.0
Oven Dry Wt, g	100.0
% Moisture:	0.0
Air Dry Sample Wt., g:	320.8
Corrected Wt., g:	320.8

Sieve Analysis for +#10 Material

Sieve Size	Wt Ret	% Ret	% Passing
1/2 inch	0.0	0.00	100.00
3/8 inch	0.0	0.00	100.00
#4	0.0	0.00	100.00
#8	0.0	0.00	100.00
#10	0.0	0.00	100.00

Air Dry Hydro Sample Wt., g:	65.5
Corrected Wt., g:	65.5
Calculation Factor	0.6550

Hydrometer Analysis for <#10 Material

Start time: 4:05:00 AM

Short Hydro	Time of Reading	Hydro Reading	Temp. at Reading, °C	Correction Factor	Corrected Hydro Reading
20 sec	4:05:20 AM	55	22	4.8	50.2
1 hour	5:05:00 AM	18	22	4.8	13.2
6 hour	10:05:00 AM	14	22	4.8	9.2

% Gravel:	0.0
% Sand(2mm - 74µm):	23.4
% Silt(74µm- 5µm):	56.4
% Clay(5µm - 2µm):	6.2
% Clay(≤2µm):	14.0

MECHANICAL ANALYSIS

CTM 203-08

Job Name:	Fire Station 7
Job No.:	306642-001
Sample ID:	**B 2 @ 45'**
Soil Description:	**ML**
Hydrometer ID:	504229

Hydroscopic Moisture

Air Dry Wt, g:	100.0
Oven Dry Wt, g	100.0
% Moisture:	0.0

Air Dry Sample Wt., g:	552
Corrected Wt., g:	552.0

Sieve Analysis for +#10 Material

Sieve Size	Wt Ret	% Ret	% Passing
1/2 inch	0.0	0.00	100.00
3/8 inch	0.0	0.00	100.00
#4	0.0	0.00	100.00
#8	0.0	0.00	100.00
#10	0.0	0.00	100.00

Air Dry Hydro Sample Wt., g:	66.2
Corrected Wt., g:	66.2
Calculation Factor	0.6620

Hydrometer Analysis for <#10 Material

Start time: 4:03:00 AM

Short Hydro	Time of Reading	Hydro Reading	Temp. at Reading, °C	Correction Factor	Corrected Hydro Reading
20 sec	4:03:20 AM	45	22	4.8	40.2
1 hour	5:03:00 AM	19	22	4.8	14.2
6 hour	10:03:00 AM	15	22	4.8	10.2

% Gravel:	0.0
% Sand(2mm - 74µm):	39.3
% Silt(74µm- 5µm):	39.2
% Clay(5µm - 2µm):	6.1
% Clay(≤2µm):	15.4

MECHANICAL ANALYSIS

CTM 203-08

Job Name:	Fire Station 7
Job No.:	306642-001
Sample ID:	**B 2 @ 60'**
Soil Description:	**ML**
Hydrometer ID:	504229

Hydroscopic Moisture

Air Dry Wt, g:	100.0
Oven Dry Wt, g	100.0
% Moisture:	0.0
Air Dry Sample Wt., g:	563.8
Corrected Wt., g:	563.8

Sieve Analysis for +#10 Material

Sieve Size	Wt Ret	% Ret	% Passing
1/2 inch	0.0	0.00	100.00
3/8 inch	0.0	0.00	100.00
#4	0.6	0.11	99.89
#8	2.3	0.41	99.59
#10	3.0	0.53	99.47

Air Dry Hydro Sample Wt., g:	62.6
Corrected Wt., g:	62.6
Calculation Factor	0.6293

Hydrometer Analysis for <#10 Material

Start time: 4:07:00 AM

Short Hydro	Time of Reading	Hydro Reading	Temp. at Reading, °C	Correction Factor	Corrected Hydro Reading
20 sec	4:07:20 AM	44	22	4.8	39.2
1 hour	5:07:00 AM	18	22	4.8	13.2
6 hour	10:07:00 AM	15	22	4.8	10.2

% Gravel:	0.1
% Sand(2mm - 74µm):	37.6
% Silt(74µm- 5µm):	41.3
% Clay(5µm - 2µm):	4.8
% Clay(≤2µm):	16.2

City of San Buenaventura Table 1809.7

Weighted expansion index (13)	Foundation for slab and raised floor (4) (8)							Concrete slabs		Pre-moistening of soils under footings, piers and slabs (4), (5)	Restrictions on piers under raised floors
	No. of stories	Stem thickness	Footing width	Footing thickness	All perimeter footings (5)	Interior footings for slab and raised floors (5)	Reinforcement for continuous foundations (2), (6)	4″ minimum thickness			
					Depth below natural surface of ground and finish grade			Reinforcement (3)	Total thickness of sand (10)		
		Inches									
0-20 Very Low (non-expansive)	1	6	12	6	12	12	1-#4 top and bottom	#4 @ 48″ o.c. each way or #3 @ 36″ o.c. each way	4″	Moistening of ground recommended prior to placing concrete is.	Piers allowed for single floor loads only
	2	8	15	8	18	18					
	3	10	18	8	24	24					
21-50 Low	1	6	12	6	15	12	1-#4 top and bottom		4″	120% of optimum moisture required to a depth of 21″ below lowest adjacent grade. Testing required.	Piers allowed for single floor loads only
	2	8	15	8	18	18					
	3	10	18	8	24	24					
51-90 Medium	1	6	12	6	21	12	1-#4 top and bottom	#3 @ 24″ o.c. each way	4″	130% of optimum moisture required to a depth of 27″ below lowest adjacent grade. Testing required.	Piers not allowed
	2	8	15	68	21	18	# 3 bars @ 24″ o.c. each way 12″ into footing, 36″ into slab [10]				
	3	10	18	8	24	24					
91-130 High	1	6	12	6	27	12	2- # 4 top & bottom	# 3 @ 24″ o.c. each way	4″	140% of optimum moisture required to a depth of 33″ below lowest adjacent grade. Testing required.	Piers not allowed
	2	8	15	8	27	18					
	3	10	18	8	27	24	# 3 bars @ 24″ o.c. each way 12″ into footing, 36″ into slab [10]				
Above 130 Very High	Special design by licensed Engineer/Architect										

Footnotes to Table 1809.7 (City of San Buenaventura)

1. Pre-moistening is required where specified in Table 1809.7 in order to achieve maximum and uniform expansion of the soil prior to construction and thus limit structural distress caused by uneven expansion and shrinkage. Other systems, which do not include pre-moistening, may be approved by the Building Official, when such alternatives are shown to provide equivalent safeguards against the adverse effects of expansive soil.
2. Reinforcement for continuous foundations must be placed not less than 3” above the bottom of the footing and not less than 3” below the top of the stem.
3. Reinforcement shall be place at mid-depth of slab.
4. After premoistening, the specified moisture content of soils shall be maintained until concrete is placed. Required moisture content shall be verified b y an approved testing laboratory no more than 24 hours prior to placement of concrete.
5. Crawl spaces under raised floors need not be pre-moistened except under interior footings. Interior footings which are not enclosed by a continuous perimeter foundation system, or equivalent concrete or masonry moisture barrier complying with Footnote #12 of Table 1809.7, shall be designed and constructed as specified for perimeter footings in Table 1809.7.
6. Foundation stem walls which exceed a height of three times the stem thickness above lowest adjacent grade must be reinforced in accordance with Chapters 19 and 21, or as required by engineering design, whichever is more restrictive.
7. Bent reinforcing bars between exterior footing and slab must be omitted when floor is designed as an independent, “floating” slab.
8. When unusual conditions beyond the scope of this table are found, design shall be in accordance with recommendations of a foundation investigation. Concrete slabs shall have a minimum thickness of 4 inches when the expansion index exceeds 50.
9. The ground under a raised floor system may be excavated to the elevation of the top of the perimeter footing, except where otherwise required by engineering design or to mitigate groundwater conditions.
10. GRADE BEAM, GARAGE OPENING. A grade beam not less than 12” X 12” in cross-sectional, or 12” x depth required by Table 1809.7, whichever is deeper, reinforced as specified for continuous foundations in Table 1809.7, shall be provided at garage-door openings.
11. Not used.
12. An approved vapor barrier shall be installed below concrete slab-on-grade floors of all residential occupancies in such a manner as to form an effective barrier against the migration of moisture into the slab. When sheet plastic material is employed for his purpose it shall be not less then 6 mils (0.006 inch) in thickness. The installation of a vapor barrier shall not impair the effectiveness of required anchor bolts or other structural parts of a building. Foundations at the perimeter of concrete floor slab shall form a continuous moisture barrier of Portland cement concrete or solid grouted masonry to the depths required by Table 1809.7.
13. When buildings are located on expansive soil having an expansion index greater than 50, gutters, downspouts, piping, and /or other non-erosive devices shall be provided to collect and conduct rainwater to a street, storm drain, or other approved watercourse or disposal area.
14. Fireplace footings must be reinforced with a horizontal grid located 3” above the bottom of the footing and consisting of not less than No. 4 bars at 12” on center each way. Vertical chimney reinforcing bars shall be hooked under the grid. Depth of fireplace footings shall be no less than that required by Table 1809.7
15. Concrete Slabs shall be doweled into footings with no less than No. 3 reinforcing bars bent 12” into the footing and thirty-six (36) inches minimum into the slab at 24” on center maximum.

APPENDIX C

ATC Hazards by Location
Deterministic Spectral Response Values Table
Site Specific Spectral Response Values
Fault Parameters

This is a beta release of the new ATC Hazards by Location website. Please contact us with feedback.

The ATC Hazards by Location website will not be updated to support ASCE 7-22. Find out why.

Hazards by Location

Search Information

Coordinates:	34.2671, -119.2694
Elevation:	13 ft
Timestamp:	2024-05-13T23:20:00.382Z
Hazard Type:	Seismic
Reference Document:	ASCE7-16
Risk Category:	IV
Site Class:	E

Basic Parameters

Name	Value	Description
S_S	1.956	MCE_R ground motion (period=0.2s)
S_1	0.735	MCE_R ground motion (period=1.0s)
S_{MS}	** null	Site-modified spectral acceleration value
S_{M1}	* null	Site-modified spectral acceleration value
S_{DS}	** null	Numeric seismic design value at 0.2s SA
S_{D1}	* null	Numeric seismic design value at 1.0s SA

* See Section 11.4.8
** See Section 11.4.8

Additional Information

Name	Value	Description
SDC	* null	Seismic design category
F_a	** null	Site amplification factor at 0.2s
F_v	* null	Site amplification factor at 1.0s
CR_S	0.883	Coefficient of risk (0.2s)
CR_1	0.883	Coefficient of risk (1.0s)
PGA	0.859	MCE_G peak ground acceleration
F_{PGA}	1.1	Site amplification factor at PGA
PGA_M	0.945	Site modified peak ground acceleration
T_L	8	Long-period transition period (s)
SsRT	1.956	Probabilistic risk-targeted ground motion (0.2s)
SsUH	2.216	Factored uniform-hazard spectral acceleration (2% probability of exceedance in 50 years)
SsD	2.456	Factored deterministic acceleration value (0.2s)
S1RT	0.735	Probabilistic risk-targeted ground motion (1.0s)
S1UH	0.832	Factored uniform-hazard spectral acceleration (2% probability of exceedance in 50 years)
S1D	0.765	Factored deterministic acceleration value (1.0s)
PGAd	0.984	Factored deterministic acceleration value (PGA)

* See Section 11.4.8
** See Section 11.4.8

The results indicated here DO NOT reflect any state or local amendments to the values or any delineation lines made during the building code adoption process. Users should confirm any output obtained from this tool with the local Authority Having Jurisdiction before proceeding with design.

34.2671 -119.2694 Lat/Long

Table E-3 - Deterministic Spectral Response Values
Deterministic NGA Response Spectra for Largest Median Earthquake Ground Motion

Average of NGA: Abrahamson - Silva - Kamai (2014), Boore - Stewart - Seyhan - Atkinson (2013), Campbell-Bozorgnia (2013), Chiou - Youngs (2014), and Idriss (2013)

Mean Spectra Response from Attentuation Relationships

Input Variables	ASK14		BSSA14	CB14	CY14	I14	Average			
	Period (sec)	Median PSa (g)	Median PSa (g)	Median PSa (g)	Median PSa (g)	Median PSa (g)	**Period (sec)**	Mean PSa (g)	Max 84th Percentile PSa (g)	**Max Rotated Determ. PSa**
	Weight:	**0.25**	**0.25**	**0.25**	**0.25**	**0.00**				
M 7.30	**0.00**	0.34	0.39	0.35	0.48	-	**0.00**	0.388	0.597	**0.657**
	0.01	0.34	0.40	0.35	0.48	-	**0.01**	0.391	0.602	**0.662**
R_{RUP} 2.10	**0.02**	0.33	0.37	0.35	0.48	-	**0.02**	0.381	0.590	**0.649**
	0.03	0.30	0.34	0.35	0.48	-	**0.03**	0.365	0.565	**0.622**
R_{JB} 1.80	**0.05**	0.30	0.36	0.35	0.48	-	**0.05**	0.370	0.584	**0.643**
	0.075	0.33	0.43	0.37	0.48	-	**0.075**	0.401	0.648	**0.713**
V_{S30} 150	**0.10**	0.38	0.52	0.40	0.51	-	**0.10**	0.457	0.738	**0.812**
	0.15	0.49	0.63	0.44	0.60	-	**0.15**	0.541	0.855	**0.940**
F_{RV} 1	**0.20**	0.56	0.73	0.48	0.73	-	**0.20**	0.624	0.961	**1.057**
	0.25	0.65	0.77	0.57	0.87	-	**0.25**	0.716	1.107	**1.269**
F_{NM} 0	**0.30**	0.77	0.84	0.66	0.97	-	**0.30**	0.809	1.261	**1.460**
	0.40	0.95	0.83	0.77	1.12	-	**0.40**	0.918	1.461	**1.720**
W 15.60	**0.50**	0.97	0.83	0.84	1.24	-	**0.50**	0.970	1.569	**1.880**
	0.75	0.89	0.69	0.91	1.34	-	**0.75**	0.958	1.602	**2.001**
Z_{TOR} 1.00	**1.00**	0.83	0.70	0.95	1.34	-	**1.00**	0.955	1.677	**2.180**
	1.50	0.77	0.71	0.92	1.18	-	**1.50**	0.895	1.677	**2.222**
Z_{BOT} 15.00	**2.00**	0.63	0.67	0.84	1.07	-	**2.00**	0.804	1.559	**2.104**
	3.00	0.45	0.44	0.61	0.68	-	**3.00**	0.545	1.087	**1.522**
dip 64	**4.00**	0.34	0.29	0.37	0.41	-	**4.00**	0.353	0.706	**1.024**
	5.00	0.26	0.21	0.25	0.25	-	**5.00**	0.240	0.481	**0.722**
	7.50	0.13	0.09	0.10	0.09	-	**7.50**	0.106	0.210	**0.315**
	10.00	0.08	0.05	0.06	0.05	-	**10.00**	0.057	0.111	**0.166**

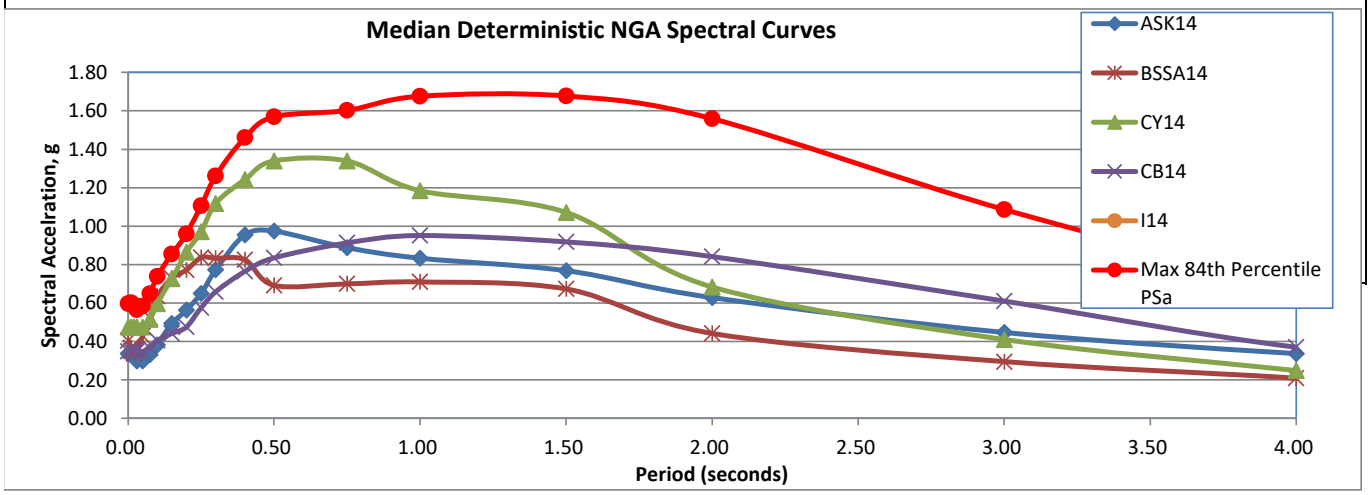

34.2671 -119.2694 Lat/Long

Table E-4 - Site Specific Spectral Response Values
Probabilistic and Deterministic Response Spectra for MCE compared to Code Spectra for 5% Viscous Damping Ratio

Natural Period T (seconds)	GeoMean Probab. 2% in 50 year MCE Spectrum (1) 2475-year (ASCE 21.2.1)	Max Rotated Probab. 2% in 50 year MCEr Spectrum (2) 2475-year (ASCE 21.2.1.1)	Max Rotated 84th Percentile Determ. MCE Spectrum (3) (ASCE 21.2.2)	Determ. Lower Limit MCE Spectrum (4) (3) * 1.00=Scaling (ASCE 21.2.2)	Determ. MCE Spectrum (5) Max (3),(4) (ASCE 21.2.2)	Site Specific MCE, Ground Response (SaM) (6) Min (2),(5) (ASCE 21.2.3)	Site Specific MCE Spectrum Comparator (6b) Max (6),1.5*(8) (ASCE 21.2.3)	2022 CBC MCE Spectrum (7)	Site Specific Design Spectrum (Sa) (8) (ASCE 21.3)	2022 CBC Design Spectrum (9) 2/3*(7)
0.00	0.731	0.710	0.657	0.657	0.657	0.657	0.657	0.782	0.438	0.522
0.05	0.922	0.895	0.643	0.643	0.643	0.643	0.782	0.978	0.521	0.652
0.10	1.113	1.081	0.812	0.812	0.812	0.812	0.938	1.173	0.625	0.782
0.15	1.334	1.296	0.940	0.940	0.940	0.940	1.094	1.368	0.730	0.912
0.20	1.491	1.449	1.057	1.057	1.057	1.057	1.251	1.563	0.834	1.042
0.30	1.782	1.821	1.460	1.460	1.460	1.460	1.563	1.954	1.042	1.302
0.40	1.893	1.968	1.720	1.720	1.720	1.720	1.720	1.956	1.147	1.304
0.50	1.979	2.093	1.880	1.880	1.880	1.880	1.880	1.956	1.253	1.304
0.75	1.799	1.984	2.001	2.001	2.001	1.984	1.984	1.956	1.323	1.304
1.00	1.672	1.919	2.180	2.180	2.180	1.919	1.919	1.956	1.280	1.304
1.50	1.376	1.610	2.222	2.222	2.222	1.610	1.610	1.956	1.073	1.304
2.00	1.167	1.391	2.104	2.104	2.104	1.391	1.391	1.470	0.927	0.980
3.00	0.766	0.947	1.522	1.522	1.522	0.947	0.947	0.980	0.632	0.653
4.00	0.508	0.650	1.024	1.024	1.024	0.650	0.650	0.735	0.433	0.490
5.00	0.361	0.479	0.722	0.722	0.722	0.479	0.479	0.588	0.319	0.392
8.00	0.155	0.205	0.388	0.388	0.388	0.205	0.294	0.368	0.196	0.245
10.00	0.106	0.141	0.166	0.166	0.166	0.141	0.235	0.235	0.157	0.157
			0.103							

C_{RS}:	0.883	
C_{R1}:	0.883	
Site Specific To:	0.318	$= 0.2*S_{D1}/S_{DS}$
Site Specific Ts:	1.591	$= S_{D1}/S_{DS}$

The value of Fa used in Column (3) is defined within ASCE 21.2.2 Supplement 1. This Fa value only applies within Column (3).

Probabilistic spectrum from 2014 USGS Ground Motion Mapping Program adjusted for site conditions and scaled to represent maximum response in a horizontal plane, in accordance with ASCE 7-16 Section 21.2

Risk Coefficients have been applied to Column (2); If Method 1 was utilized the Risk Coefficients, CRS and CR1 are presented above, if Method 2 was utilized the Risk Coefficients were obtained from the USGS Risk Targeted Ground Motion Calculator (https://earthquake.usgs.gov/designmaps/rtgm).

Reference: ASCE 7-16, Chapters 21.2, 21.3, 21.4, 21.5, 11.4, and 11.8

Calculation Utilized ASCE7-16, Section 21.2.1.1 - Method 1

Short-Period Seismic Design Category:	1-Second Period Seismic Design Category:
D	D

Vertical Coefficient (C_V)
1.49

1 g = 980.6 cm/sec^2 =32.2 ft/sec^2
PSV (ft/sec) = 32.2(S_a)T/(2p)

Deterministic Fault Parameters			
Ventura-Pitas Point FM3.1, 3.		R_{JB} (km)	1.8
Magnitude	7.30	R_{RUP} (km)	2.1
Distance (km)	1.8	Z_{TOR} (km)	1.0
Width (km)	15.6	Z_{BOT} (km)	15.0
Dip (Deg.)	64	V_{S30} (m/s)	150

Site Coefficients	
F_{PGA}	1.10
F_a	1.00
F_v	4.00

Mapped MCE Acceleration Values		
PGA	0.859	g
S_S	1.956	g
S_1	0.735	g

Seismic Site Class	**E**
Risk Category	**IV**

Site-Specific Design Acceleration Values		
PGA_M	**0.756**	**g**
S_{DS}	**1.191**	**g**
S_{D1}	**1.895**	**g**

Site-Specific MCE_R, 5% damped, Spectral Response Acceleration Parameter		
S_{MS}	**1.786**	**g**
S_{M1}	**2.842**	**g**

Key: Probab. = Probabilistic, Determ. = Deterministic, MCE = Maximum Considered Earthquake

Fault Parameters

Fault Section Name	Distance (miles)	Distance (km)	Upper Seis. Depth (km)	Lower Seis. Depth (km)	Avg Dip Angle (deg.)	Avg Dip Direction (deg.)	Avg Rake (deg.)	Trace Length (km)	Fault Type	**Mean Mag**	Mean Return Interval (years)	Slip Rate (mm/yr)
Oak Ridge (Offshore) FM3.2	1.1	1.8	0.0	7.9	32	180	90	38	B	**6.9**		3
Ventura-Pitas Point FM3.1, 3.2	1.1	1.8	1.0	15.0	64	353	60	59	B	**7.3**		1
Oak Ridge (Onshore) FM3.1, 3.2	3.3	5.3	1.0	19.4	65	159	90	50	B	**7.2**		4
Red Mountain FM3.1, 3.2	5.3	8.6	0.0	14.1	56	2	90	101	B	**7.4**		2
Sisar FM3.1, 3.2	9.1	14.6	0.0	17.4	29	168	na	20	B'	**7.0**		
North Channel FM3.2	9.6	15.4	1.1	4.5	26	10	90	51	B	**6.7**		1
Simi-Santa Rosa FM3.1, 3.2	10.3	16.5	1.0	12.1	60	346	30	39	B	**6.8**		1
Mission Ridge-Arroyo Parida-Santa Ana FM3.1, 3	11.3	18.2	0.0	7.6	70	176	90	69	B	**7.0**		0.4
Pitas Point (Lower)-Montalvo, FM3.1	13.6	21.9	0.4	12.7	16	359	90	30	B	**7.3**		2.5
Malibu Coast (Extension), alt 1, FM3.1	13.7	22.0	0.0	7.8	74	4	30	35	B'	**6.5**		
Malibu Coast (Extension), alt 2 FM3.2	13.7	22.0	0.0	16.6	74	4	30	35	B'	**6.9**		
San Cayetano FM3.1, 3.2	14.1	22.7	0.0	16.0	42	3	90	42	B	**7.2**		6
Channel Islands Western Deep Ramp FM3.1, 3.2	15.7	25.2	4.8	12.5	21	204	90	62	B'	**7.3**		
Channel Islands Thrust FM3.1, 3.2	16.7	26.8	5.0	12.3	20	354	90	59	B	**7.3**		1.5
Santa Ynez (East) FM3.1, 3.2	16.8	27.0	0.0	13.3	70	172	0	68	B	**7.1**		2
Pitas Point (Upper) FM3.2	18.3	29.5	1.4	10.0	42	15	90	35	B	**6.8**		1
Santa Cruz Island FM3.1, 3.2	19.6	31.6	0.0	13.3	90	188	30	69	B	**7.1**		1
Anacapa-Dume, alt 1, FM3.1	21.4	34.4	0.0	15.5	45	354	60	51	B	**7.2**		3
Anacapa-Dume, alt 2, FM3.2	21.4	34.4	1.2	11.4	41	352	60	65	B	**7.2**		3
Pine Mtn FM3.1, 3.2	22.8	36.7	0.0	16.3	45	5	na	62	B'	**7.3**		
Santa Cruz Catalina Ridge alt 1, FM3.1	23.2	37.3	0.0	11.0	90	na	na	114	B'	**7.2**		
Santa Cruz Catalina Ridge Alt2 FM3.2	23.2	37.3	0.0	11.0	90	38	na	137	B'	**7.3**		
Oak Ridge (Offshore), west extension FM3.2	23.3	37.4	0.0	3.1	67	195	na	28	B'	**6.1**		
Malibu Coast, alt 1, FM3.1	24.5	39.5	0.0	7.8	75	3	30	38	B	**6.6**		0.3
Malibu Coast, alt 2 FM3.2	24.5	39.5	0.0	16.6	74	3	30	38	B	**6.9**		0.3
Santa Ynez (West) FM3.1, 3.2	26.3	42.3	0.0	9.2	70	182	0	80	B	**6.9**		2
Big Pine (Central) FM3.1, 3.2	28.1	45.2	0.0	6.6	76	167	na	23	B'	**6.3**		
Ozena FM3.1, 3.2	28.4	45.8	0.0	13.9	33	na	na	41	B'	**7.2**		
Big Pine (West) FM3.1, 3.2	28.9	46.5	0.0	11.0	50	2	na	18	B'	**6.5**		
Pitas Point (Lower, West), FM 3.1	29.0	46.7	1.5	8.8	13	3	90	35	B	**7.2**		2.5
Santa Susana, alt 2 FM3.2	29.3	47.2	0.0	10.6	53	10	90	43	B'	**6.8**		
Santa Susana, alt 1, FM3.1	29.3	47.2	0.0	16.3	55	9	90	27	B	**6.8**		5
Del Valle FM3.1, 3.2	31.5	50.6	0.0	18.8	73	195	90	9	B'	**6.3**		
Holser, alt 1, FM 3.1	31.7	51.0	0.0	18.6	58	187	90	20	B	**6.7**		0.4
Holser, alt 2 FM3.2	31.7	51.0	0.0	18.5	58	182	90	17	B'	**6.7**		
Northridge Hills FM3.1, 3.2	32.2	51.9	0.0	14.9	31	19	90	25	B'	**7.0**		
Big Pine (East) FM3.1, 3.2	32.7	52.6	0.0	14.3	73	338	na	23	B'	**6.6**		
Northridge FM3.1, 3.2	33.4	53.8	7.4	16.8	35	201	90	33	B	**6.8**		1.5
Santa Monica Bay FM3.1, 3.2	33.8	54.5	2.3	18.0	20	44	na	17	B'	**7.0**		
San Pedro Basin FM3.1, 3.2	35.2	56.6	0.8	12.3	88	51	na	69	B'	**7.0**		

Reference: USGS OFR 2013-1165 (CGS SP 228)

Based on Site Coordinates of 34.2671 Latitude, -119.2694 Longitude

Mean Magnitude for Type A Faults based on 0.1 weight for unsegmented section, 0.9 weight for segmented model (weighted by probability of each scenario with section listed as given on Table 3 of Appendix G in OFR 2008-1437). Mean magnitude is average of Ellworths-B and Hanks & Bakun moment area relationship.

APPENDIX D

Results of Liquefaction and Seismic-Induced Settlement Analyses
Results of Lateral Spread Analyses

Liquefaction Analyses Without Remedial Grading

LIQUEFY-v2dot45.XLS - A SPREADSHEET FOR EMPIRICAL ANALYSIS OF LIQUEFACTION POTENTIAL AND INDUCED GROUND SUBSIDENCE

Coryright & Developed 2007 by Shelton L. Stringer, PE, GE, PG , EG - Earth Systems Southwest

(Modified by R. Beard to use 2/3's PGAm for Seismic Induced Settlement of Dry Sands)

Project: Fire Station No. 7
Job No: 306642-001
Date: 8/14/2024
Boring: B-1 Data Set: 1

Methods:
Journal of Geotechnical and Enviromental Engineering (JGEE), October 2001, Vol 127, No. 10, ASCE
Settlement Analysis from Tokimatsu and Seed (1987), JGEE,Vol 113, No.8, ASCE
Modified by Pradel, JGEE, Vol 124, No. 4, ASCE

EARTHQUAKE INFORMATION:

Magnitude:	7.1	7.5
PGA, g:	0.95	0.83
MSF:	1.15	
GWT:	4.0	feet
Calc GWT:	4.0	feet
Remediate to:	0.0	feet

SPT N VALUE CORRECTIONS:

Energy Correction to N60 (C_E):	1.33	Automatic Hammer
Drive Rod Corr. (C_R):	1	Default
Rod Length above ground (feet):	3.0	
Borehole Dia. Corr. (C_B):	1.00	
Sampler Liner Correction for SPT?:	1.0	Yes
Cal Mod/ SPT Ratio:	0.63	

Threshold Acceler., g: 0.12

Total (ft) Liquefied Thickness	Total (in.) Induced Subsidence
6.0	2.8

upper 50 ft

Required SF: 1.30
Minimum Calculated SF: 0.12

SETTLEMENT (SUBSIDENCE) OF DRY SANDS

Nc = 11.6

Base Depth (feet)	Cal Mod N	SPT N	Liquef. Suscept. (0 or 1)	Total Unit Wt. (pcf)	Fines Content (%)	Depth of SPT (feet)	Rod Length (feet)	Tot.Stress at SPT po (tsf)	Eff.Stress at SPT p'o (tsf)	rd	C_N	C_R	C_S	$N_{1(60)}$	Rel. Dens. Dr (%)	*Trigger FC Adj.* $\Delta N_{1(60)}$	*Equiv. Sand* $N_{1(60)CS}$	$K\sigma$	M = 7.5 Available CRR	M =7.5 Induced CSR*	**Liquefac. Safety Factor**	*Post FC Adj.* $\Delta N_{1(60)}$	$N_{1(60)CS}$	Volumetric *Strain (%)*	**Induced Subsidence (in.)**	p (tsf)	G_{max} (tsf)	τ_{av} (tsf)	Shear Strain γ	Strain E_{15}	Strain Enc	**Dry Sand Subsidence (in.)**
								0.000																									
4.0	5	**3**	1	130	29	4.0	7.0	0.259	0.259	0.99	1.70	0.75	1.00	5.3	28	5.4	10.8	1.00	0.117	0.533	**Non-Liq.**	5.4	10.8	1.33	**0.64**	0.174	411	0.106	3.5E-03	7.5E-03	6.7E-03	**0.64**
7.0	2	**1**	1	130	29	6.5	9.5	0.421	0.343	0.99	1.70	0.75	1.00	2.1	17	4.9	7.1	1.00	0.081	0.650	**0.12**	2.3	4.5	4.38	**1.58**	0.282	456	0.171	7.9E-03			
10.0	18	**11**	1	121	29	9.0	12.0	0.575	0.419	0.98	1.59	0.75	1.00	18.0	51	7.3	25.2	1.00	0.287	0.723	**0.40**	2.3	20.3	1.56	**0.56**	0.385	814	0.232	1.1E-03			
13.0	25	**16**	1	123	29	11.5	14.5	0.727	0.493	0.98	1.46	0.80	1.00	24.4	59	8.2	32.6	1.00	Infin.	0.772	**Non-Liq.**	8.2	32.6	0.00	**0.00**	0.487	997	0.292	9.1E-04			
18.0		**21**	1	125	8	16.5	19.5	1.038	0.648	0.97	1.28	0.89	1.30	41.2	77	0.8	42.0	1.00	Infin.	0.830	**Non-Liq.**	0.8	42.0	0.00	**0.00**	0.696	1,296	0.413	8.0E-04			
23.0		**24**	1	125	30	21.5	24.5	1.351	0.805	0.95	1.15	0.95	1.30	45.2	80	10.0	55.2	1.00	Infin.	0.859	**Non-Liq.**	10.0	55.2	0.00	**0.00**	0.905	1,619	0.530	7.0E-04			
28.5		**15**	1	125	30	26.5	29.5	1.663	0.961	0.94	1.05	1.00	1.25	26.1	61	8.7	34.8	1.00	Infin.	0.870	**Non-Liq.**	8.7	34.8	0.00	**0.00**	1.114	1,540	0.641	1.1E-03			
33.0		**8**		115	82	31.5	34.5	1.961	1.103	0.91	1.00	1.00	1.13	12.0				0.99	Infin.	0.878	**Non-Liq.**		12.0	0.00	**0.00**	1.314						
38.0		**21**	1	120	35	36.5	39.5	2.257	1.243	0.88	0.92	1.00	1.30	33.5	69	10.0	43.5	0.95	Infin.	0.900	**Non-Liq.**	10.0	43	0.00	**0.00**	1.512	1,933	0.817	9.0E-04			
43.0		**18**	1	120	35	41.5	44.5	2.557	1.387	0.84	0.87	1.00	1.25	26.2	61	10.0	36.2	0.92	Infin.	0.899	**Non-Liq.**	10.0	36.2	0.00	**0.00**	1.713	1,935	0.882	9.9E-04			
48.0		**25**	1	120	35	46.5	49.5	2.857	1.531	0.79	0.83	1.00	1.30	35.9	72	10.0	45.9	0.86	Infin.	0.916	**Non-Liq.**	10.0	45.9	0.00	**0.00**	1.914	2,215	0.927	7.8E-04			
51.5		**50**	1	125	5	51.5	54.5	3.166	1.684	0.74	0.79	1.00	1.30	68.5	99	0.0	68.5	0.83	Infin.	0.897	**Non-Liq.**	0.0	68.5	0.00	**0.00**	2.121	2,664	0.961	5.7E-04			

EARTH SYSTEMS - EVALUATION OF LIQUEFACTION POTENTIAL AND INDUCED SUBSIDENCE

Fire Station No. 7 **Project No: 306642-001** 1996/1998 NCEER Method

Boring: B-1 **Earthquake Magnitude: 7.1** **PGA, g: 0.95** **Calc GWT (feet): 4**

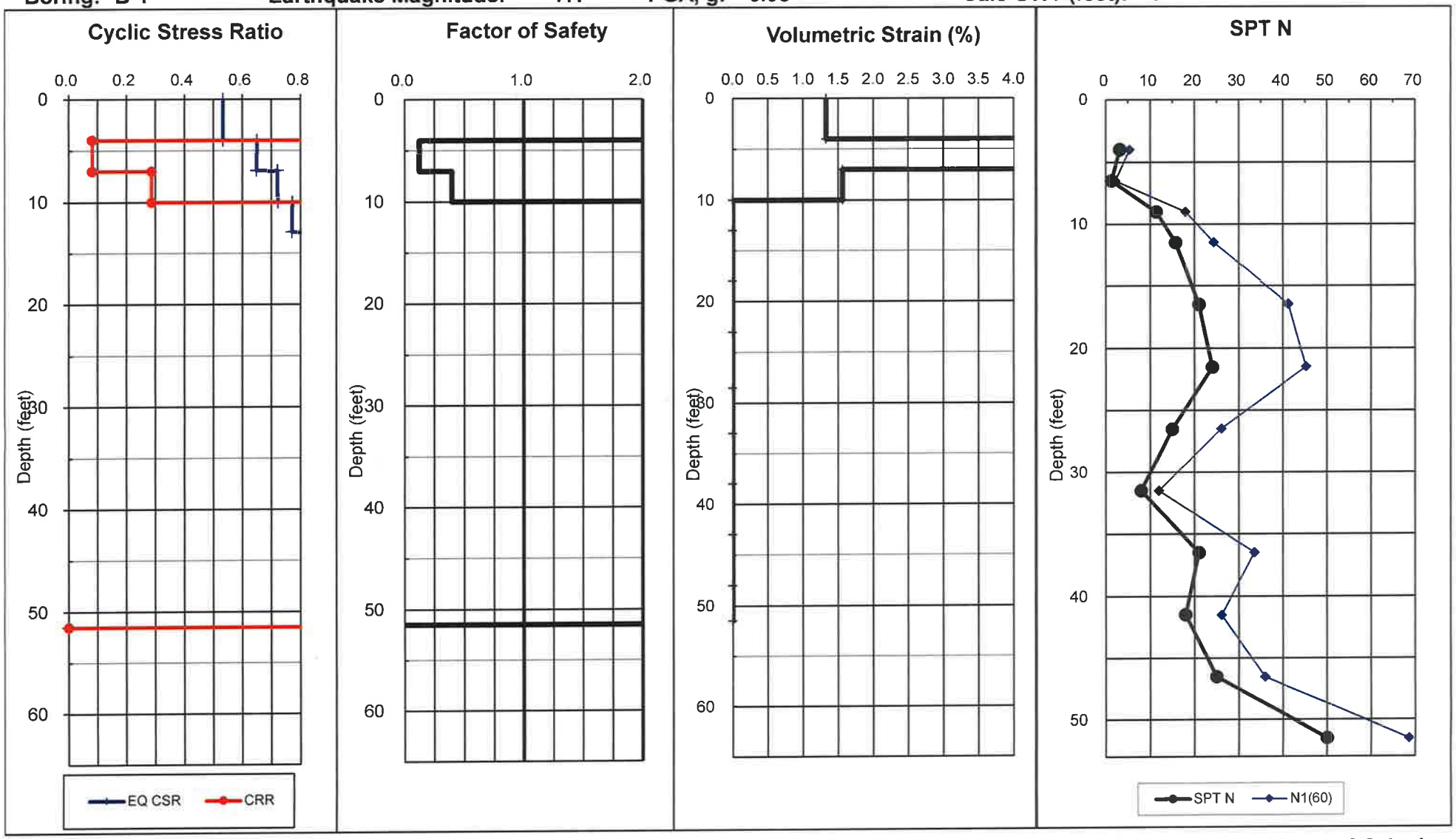

Total Thickness of Liquefiable Layers: 6.0 feet

Estimated Total Ground Subsidence: 2.8 inches

LIQUEFY-v2dot45.XLS - A SPREADSHEET FOR EMPIRICAL ANALYSIS OF LIQUEFACTION POTENTIAL AND INDUCED GROUND SUBSIDENCE

Coryright & Developed 2007 by Shelton L. Stringer, PE, GE, PG , EG - Earth Systems Southwest

(Modified by R. Beard to use 2/3's PGAm for Seismic Induced Settlement of Dry Sands)

Project: Fire Station No. 7
Job No: 306642-001
Date: 8/14/2024
Boring: B-2 Data Set: 2

Methods:
Journal of Geotechnical and Enviromental Engineering (JGEE), October 2001, Vol 127, No. 10, ASCE
Settlement Analysis from Tokimatsu and Seed (1987), JGEE,Vol 113, No.8, ASCE
Modified by Pradel, JGEE, Vol 124, No. 4, ASCE

EARTHQUAKE INFORMATION:

Magnitude:	7.1	7.5
PGA, g:	0.95	0.83
MSF:	1.15	
GWT:	4.0	feet
Calc GWT:	4.0	feet
Remediate to:	0.0	feet

SPT N VALUE CORRECTIONS:

Energy Correction to N60 (C_E):	1.33	Automatic Hammer
Drive Rod Corr. (C_R):	1	Default
Rod Length above ground (feet):	3.0	
Borehole Dia. Corr. (C_B):	1.00	
Sampler Liner Correction for SPT?:	1.0	Yes
Cal Mod/ SPT Ratio:	0.63	

Threshold Acceler., g: 0.16

Total (ft) Liquefied Thickness	Total (in.) Induced Subsidence
13.5	2.9

upper 50 ft

Required SF: 1.30
Minimum Calculated SF: 0.17

SETTLEMENT (SUBSIDENCE) OF DRY SANDS

Nc = 11.6

Base Depth (feet)	Cal Mod N	SPT N	Liquef. Suscept. (0 or 1)	Total Unit Wt. (pcf)	Fines Content (%)	Depth of SPT (feet)	Rod Length (feet)	Tot.Stress at SPT po (tsf)	Eff.Stress at SPT p'o (tsf)	rd	C_N	C_R	C_S	$N_{1(60)}$	Rel. Dens. Dr (%)	*Trigger FC Adj.* $\Delta N_{1(60)}$	*Equiv. Sand* $N_{1(60)CS}$	$K\sigma$	M = 7.5 Available CRR	M =7.5 Induced CSR*	**Liquefac. Safety Factor**	*Post FC Adj.* $\Delta N_{1(60)}$	$N_{1(60)CS}$	Volumetric *Strain (%)*	**Induced Subsidence (in.)**	p (tsf)	G_{max} (tsf)	τ_{av} (tsf)	Shear Strain γ	Strain E_{15}	Strain Enc	**Dry Sand Subsidence (in.)**
								0.000																									
4.0	12	**8**	1	130	35	4.0	7.0	0.259	0.259	0.99	1.70	0.75	1.00	12.8	43	7.6	20.4	1.00	0.221	0.533	**Non-Liq.**	7.6	20.4	0.22	**0.11**	0.174	509	0.106	1.3E-03	1.2E-03	1.1E-03	**0.11**
7.0	4	**3**	1	107	59	6.5	9.5	0.393	0.315	0.99	1.70	0.75	1.00	4.3	25	5.9	10.1	1.00	0.110	0.661	**0.17**	4.4	8.6	2.82	**1.02**	0.263	496	0.160	4.0E-03			
10.0	31	**20**	1	118	4	9.0	12.0	0.538	0.382	0.98	1.66	0.75	1.00	32.4	68	0.0	32.4	1.00	Infin.	0.742	**Non-Liq.**	0.0	32.4	0.00	**0.00**	0.360	856	0.217	8.4E-04			
14.0	24	**15**	1	129	4	11.5	14.5	0.693	0.459	0.98	1.52	0.80	1.00	24.3	59	0.0	24.3	1.00	0.271	0.791	**0.34**	0.0	24.3	1.28	**0.62**	0.465	882	0.279	1.2E-03			
18.0		**34**	1	125	35	16.5	19.5	1.011	0.621	0.97	1.31	0.89	1.30	68.1	99	10.0	78.1	1.00	Infin.	0.844	**Non-Liq.**	10.0	78.1	0.00	**0.00**	0.677	1,573	0.402	4.9E-04			
22.0		**38**	1	125	35	21.5	24.5	1.323	0.777	0.95	1.17	0.95	1.30	72.8	100	10.0	82.8	1.00	Infin.	0.871	**Non-Liq.**	10.0	82.8	0.00	**0.00**	0.887	1,835	0.519	5.2E-04			
28.5		**26**	1	125	35	26.5	29.5	1.636	0.934	0.94	1.06	1.00	1.30	47.7	83	10.0	57.7	1.00	Infin.	0.880	**Non-Liq.**	10.0	57.7	0.00	**0.00**	1.096	1,808	0.631	7.1E-04			
34.0		**38**	1	120	55	31.5	34.5	1.941	1.083	0.91	0.99	1.00	1.30	64.9	96	10.0	74.9	0.99	Infin.	0.886	**Non-Liq.**	10.0	74.9	0.00	**0.00**	1.300	2,149	0.729	6.1E-04			
38.0		**15**	1	120	78	36.5	39.5	2.241	1.227	0.88	0.93	1.00	1.22	22.6	57	9.5	32.2	0.96	Infin.	0.902	**Non-Liq.**	9.5	32	0.00	**0.00**	1.501	1,742	0.812	1.1E-03			
43.0		**18**	1	125	35	41.5	44.5	2.550	1.380	0.84	0.88	1.00	1.25	26.2	61	10.0	36.2	0.92	Infin.	0.900	**Non-Liq.**	10.0	36.2	0.00	**0.00**	1.708	1,933	0.879	9.8E-04			
48.0		**20**	1	125	61	46.5	49.5	2.862	1.536	0.79	0.83	1.00	1.26	27.9	63	10.0	37.9	0.89	Infin.	0.882	**Non-Liq.**	10.0	37.9	0.00	**0.00**	1.918	2,080	0.929	8.8E-04			
53.0		**50**	1	130	4	51.5	54.5	3.183	1.701	0.74	0.79	1.00	1.30	68.2	99	0.0	68.2	0.83	Infin.	0.896	**Non-Liq.**	0.0	68.2	0.00	**0.00**	2.133	2,667	0.967	5.7E-04			
55.0		**34**	1	130	4	56.5	59.5	3.508	1.870	0.69	0.75	1.00	1.30	44.2	79	0.0	44.2	0.80	Infin.	0.872	**Non-Liq.**	0.0	44.2	0.00	**0.00**	2.351	2,423	0.996	6.9E-04			
59.0		**15**	1	125	47	56.5	59.5	3.505	1.867	0.69	0.75	1.00	1.18	17.7	50	8.5	26.3	0.84	0.305	0.824	**0.37**	3.8	21.5	1.48	**0.71**	2.348	2,036	0.995	9.7E-04			
61.5		**14**	1	120	62	61.5	64.5	3.811	2.017	0.65	0.72	1.00	1.16	15.7	47	8.1	23.8	0.88	0.264	0.747	**0.35**	4.5	20.1	1.58	**0.47**	2.553	2,055	1.016	9.5E-04			

EARTH SYSTEMS - EVALUATION OF LIQUEFACTION POTENTIAL AND INDUCED SUBSIDENCE

Fire Station No. 7 **Project No: 306642-001** 1996/1998 NCEER Method

Boring: B-2 **Earthquake Magnitude: 7.1** **PGA, g: 0.95** **Calc GWT (feet): 4**

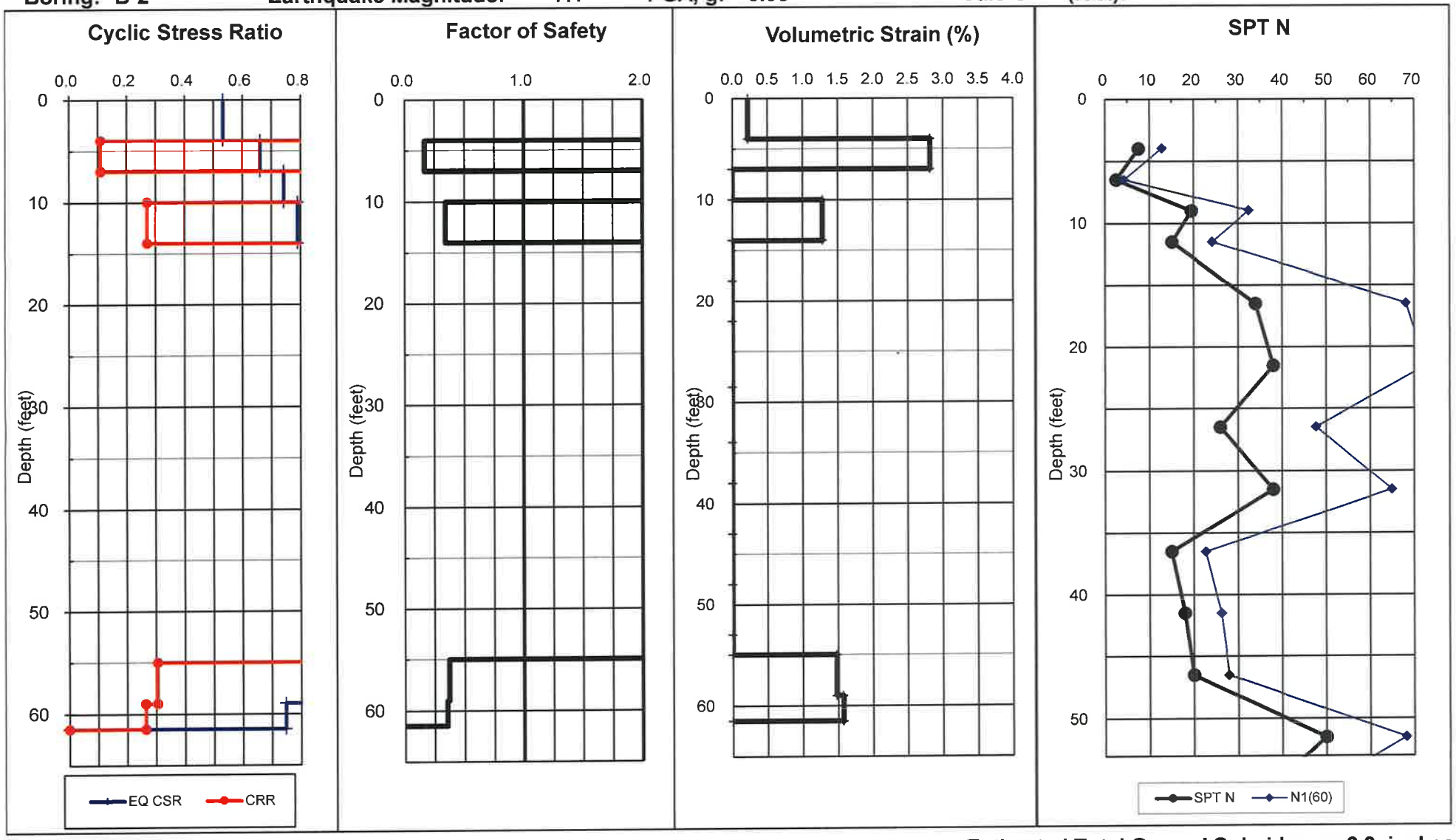

Total Thickness of Liquefiable Layers: 13.5 feet

Estimated Total Ground Subsidence: 2.9 inches

LIQUEFY-v2dot45.XLS - A SPREADSHEET FOR EMPIRICAL ANALYSIS OF LIQUEFACTION POTENTIAL AND INDUCED GROUND SUBSIDENCE

Coryright & Developed 2007 by Shelton L. Stringer, PE, GE, PG , EG - Earth Systems Southwest

(Modified by R. Beard to use 2/3's PGAm for Seismic Induced Settlement of Dry Sands)

Project: Fire Station No. 7
Job No: 306642-001
Date: 8/14/2024
Boring: B-3 Data Set: 3

Methods:
Journal of Geotechnical and Enviromental Engineering (JGEE), October 2001, Vol 127, No. 10, ASCE
Settlement Analysis from Tokimatsu and Seed (1987), JGEE,Vol 113, No.8, ASCE
Modified by Pradel, JGEE, Vol 124, No. 4, ASCE

EARTHQUAKE INFORMATION:
Magnitude: 7.1 7.5
PGA, g: 0.95 0.83
MSF: 1.15
GWT: 6.0 feet
Calc GWT: 4.0 feet
Remediate to: 0.0 feet

SPT N VALUE CORRECTIONS:
Energy Correction to N60 (C_E): 1.33 Automatic Hammer
Drive Rod Corr. (C_R): 1 Default
Rod Length above ground (feet): 3.0
Borehole Dia. Corr. (C_B): 1.00
Sampler Liner Correction for SPT?: 1.0 Yes
Cal Mod/ SPT Ratio: 0.63

Threshold Acceler., g: 0.17
Minimum Calculated SF: 0.18
Required SF: 1.30

Total (ft) Liquefied Thickness	Total (in.) Induced Subsidence
18.5	3.5

upper 50 ft

SETTLEMENT (SUBSIDENCE) OF DRY SANDS

Nc = 11.6

Base Depth (feet)	Cal Mod N	SPT N	Liquef. Suscept. (0 or 1)	Total Unit Wt. (pcf)	Fines Content (%)	Depth of SPT (feet)	Rod Length (feet)	Tot.Stress at SPT po (tsf)	Eff.Stress at SPT p'o (tsf)	rd	C_N	C_R	C_S	$N_{1(60)}$	Rel. Dens. Dr (%)	Trigger FC Adj. $\Delta N_{1(60)}$	Equiv. Sand $N_{1(60)CS}$	Kσ	M = 7.5 Available CRR	M =7.5 Induced CSR*	Liquefac. Safety Factor	Post FC Adj. $\Delta N_{1(60)}$	$N_{1(60)CS}$	Volumetric Strain (%)	Induced Subsidence (in.)	p (tsf)	G_{max} (tsf)	τ_{av} (tsf)	Shear Strain γ	Strain E_{15}	Strain Enc	Dry Sand Subsidence (in.)
								0.000																								
4.0		9	1	120	35	4.0	7.0	0.240	0.240	0.99	1.70	0.75	1.18	18.1	51	8.6	26.7	1.00	0.313	0.533	Non-Liq.	8.6	26.7	0.11	0.05	0.161	536	0.098	8.7E-04	6.1E-04	5.5E-04	0.05
7.0		18	1	120	35	6.5	9.5	0.390	0.374	0.99	1.68	0.75	1.30	39.2	75	10.0	49.2	1.00	Infin.	0.662	Non-Liq.	10.0	49.2	0.00	0.00	0.261	837	0.158	5.0E-04			
10.0		7	1	120	3	9.0	12.0	0.540	0.446	0.98	1.54	0.75	1.13	12.1	42	0.0	12.1	1.00	0.131	0.741	0.18	0.0	12.1	2.31	0.83	0.362	618	0.218	3.1E-03			
12.0		23	1	120	3	11.5	14.5	0.690	0.518	0.98	1.43	0.80	1.30	45.2	80	0.0	45.2	1.00	Infin.	0.793	Non-Liq.	0.0	45.2	0.00	0.00	0.462	1,082	0.277	6.5E-04			
15.0		21	1	120	3	14.0	17.0	0.840	0.590	0.97	1.34	0.85	1.30	41.1	77	0.0	41.1	1.00	Infin.	0.829	Non-Liq.	0.0	41.1	0.00	0.00	0.563	1,158	0.336	7.6E-04			
17.5		33	1	120	3	16.5	19.5	0.990	0.662	0.97	1.26	0.89	1.30	64.0	96	0.0	64.0	1.00	Infin.	0.855	Non-Liq.	0.0	64.0	0.00	0.00	0.663	1,456	0.393	5.6E-04			
19.5		20	1	120	3	19.0	22.0	1.140	0.734	0.96	1.20	0.92	1.30	38.2	74	0.0	38.2	1.00	Infin.	0.874	Non-Liq.	0.0	38.2	0.00	0.00	0.764	1,316	0.450	8.9E-04			
22.0		20	1	120	3	21.5	24.5	1.290	0.806	0.95	1.15	0.95	1.30	37.6	73	0.0	37.6	1.00	Infin.	0.887	Non-Liq.	0.0	37.6	0.00	0.00	0.864	1,393	0.506	9.4E-04			
27.0		16	1	120	3	24.0	27.0	1.440	0.878	0.95	1.10	0.97	1.27	29.0	64	0.0	29.0	1.00	0.374	0.896	0.42	0.0	29	0.95	0.57	0.965	1,349	0.560	1.2E-03			
29.5		16	1	120	35	29.0	32.0	1.740	1.022	0.93	1.02	1.00	1.26	27.3	62	10.0	37.3	1.00	Infin.	0.901	Non-Liq.	10.0	37.3	0.00	0.00	1.166	1,612	0.663	1.0E-03			
32.0		11	1	120	74	31.5	34.5	1.890	1.094	0.91	0.98	1.00	1.17	16.9	49	8.4	25.2	1.00	0.287	0.893	0.32	5.0	21.8	1.46	0.44	1.266	1,476	0.710	1.4E-03			
34.5		13	1	120	43	34.0	37.0	2.040	1.166	0.90	0.95	1.00	1.20	19.7	53	8.9	28.7	0.99	0.363	0.902	0.40	3.4	23.2	1.37	0.41	1.367	1,599	0.754	1.3E-03			
37.0		16	1	120	57	36.5	39.5	2.190	1.238	0.88	0.92	1.00	1.24	24.3	59	9.9	34.2	0.97	Infin.	0.908	Non-Liq.	9.9	34.2	0.00	0.00	1.467	1,757	0.793	1.1E-03			
40.0		9	1	120	55	39.0	42.0	2.340	1.310	0.86	0.90	1.00	1.13	12.1	42	7.4	19.6	0.97	0.211	0.894	0.24	4.2	16.3	1.85	0.67	1.568	1,508	0.828	1.7E-03			
42.5		10	1	120	37	41.5	44.5	2.490	1.382	0.84	0.87	1.00	1.14	13.3	44	7.7	20.9	0.96	0.227	0.886	0.26	3.0	16.2	1.86	0.56	1.668	1,591	0.858	1.5E-03			
44.0		17	1	120	37	44.0	47.0	2.640	1.454	0.81	0.85	1.00	1.23	23.7	58	9.7	33.5	0.92	Infin.	0.899	Non-Liq.	9.7	33.5	0.00	0.00	1.769	1,916	0.884	9.9E-04			
47.0		24	1	120	37	46.5	49.5	2.790	1.526	0.79	0.83	1.00	1.30	34.5	70	10.0	44.5	0.88	Infin.	0.919	Non-Liq.	10.0	44.5	0.00	0.00	1.869	2,166	0.906	7.8E-04			
49.5		20	1	120	39	49.0	52.0	2.940	1.598	0.76	0.81	1.00	1.26	27.3	62	10.0	37.3	0.89	Infin.	0.877	Non-Liq.	10.0	37.3	0.00	0.00	1.970	2,095	0.923	8.5E-04			
52.0		26	1	120	39	51.5	54.5	3.090	1.670	0.74	0.80	1.00	1.30	35.8	71	10.0	45.8	0.85	Infin.	0.900	Non-Liq.	10.0	45.8	0.00	0.00	2.070	2,301	0.938	7.1E-04			
54.5		81	1	125	39	54.5	57.5	3.276	1.763	0.71	0.77	1.00	1.30	108.5	100	10.0	118.5	0.83	Infin.	0.885	Non-Liq.	10.0	118	0.00	0.00	2.195	3,253	0.955	4.1E-04			
57.0		43	1	125	40	56.5	59.5	3.401	1.826	0.69	0.76	1.00	1.30	56.6	90	10.0	66.6	0.82	Infin.	0.876	Non-Liq.	10.0	66.6	0.00	0.00	2.279	2,735	0.965	5.4E-04			
59.0		32	1	125	40	59.0	62.0	3.558	1.904	0.67	0.75	1.00	1.30	41.2	77	10.0	51.2	0.80	Infin.	0.864	Non-Liq.	10.0	51.2	0.00	0.00	2.384	2,563	0.978	6.0E-04			

EARTH SYSTEMS - EVALUATION OF LIQUEFACTION POTENTIAL AND INDUCED SUBSIDENCE

Fire Station No. 7 **Project No: 306642-001** 1996/1998 NCEER Method

Boring: B-3 **Earthquake Magnitude: 7.1** **PGA, g: 0.95** **Calc GWT (feet): 4**

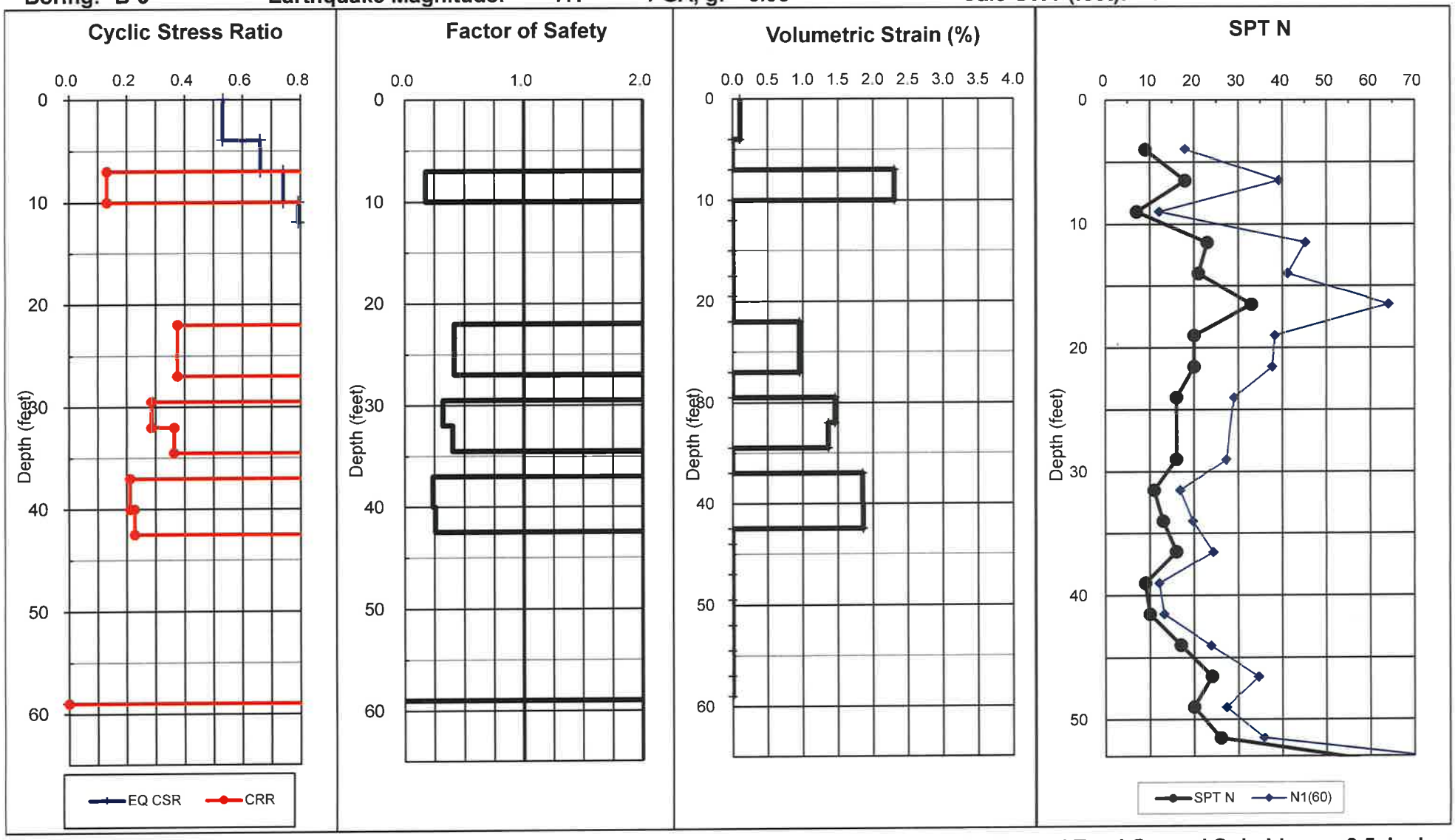

Total Thickness of Liquefiable Layers: 18.5 feet

Estimated Total Ground Subsidence: 3.5 inches

Liquefaction Analyses With 7 Feet of Remedial Grading

LIQUEFY-v2dot45.XLS - A SPREADSHEET FOR EMPIRICAL ANALYSIS OF LIQUEFACTION POTENTIAL AND INDUCED GROUND SUBSIDENCE

Coryright & Developed 2007 by Shelton L. Stringer, PE, GE, PG , EG - Earth Systems Southwest

(Modified by R. Beard to use 2/3's PGAm for Seismic Induced Settlement of Dry Sands)

Project: Fire Station No. 7
Job No: 306642-001
Date: 8/14/2024
Boring: B-1 Data Set: 1

Methods:
Journal of Geotechnical and Enviromental Engineering (JGEE), October 2001, Vol 127, No. 10, ASCE
Settlement Analysis from Tokimatsu and Seed (1987), JGEE,Vol 113, No.8, ASCE
Modified by Pradel, JGEE, Vol 124, No. 4, ASCE

EARTHQUAKE INFORMATION:

Magnitude:	7.1	7.5
PGA, g:	0.95	0.83
MSF:	1.15	
GWT:	4.0	feet
Calc GWT:	4.0	feet
Remediate to:	7.0	feet

SPT N VALUE CORRECTIONS:

Energy Correction to N60 (C_E):	1.33	Automatic Hammer
Drive Rod Corr. (C_R):	1	Default
Rod Length above ground (feet):	3.0	
Borehole Dia. Corr. (C_B):	1.00	
Sampler Liner Correction for SPT?:	1.0	Yes
Cal Mod/ SPT Ratio:	0.63	

Total (ft) Liquefied Thickness	Total (in.) Induced Subsidence
3.0	0.6

upper 50 ft

Threshold Acceler., g: 0.38
Required SF: 1.30
Minimum Calculated SF: 0.40

SETTLEMENT (SUBSIDENCE) OF DRY SANDS

Nc = 11.6

Base Depth (feet)	Cal Mod N	SPT N	Liquef. Suscept. (0 or 1)	Total Unit Wt. (pcf)	Fines Content (%)	Depth of SPT (feet)	Rod Length (feet)	Tot.Stress at SPT po (tsf)	Eff.Stress at SPT p'o (tsf)	rd	C_N	C_R	C_S	$N_{1(60)}$	Rel. Dens. Dr (%)	*Trigger FC Adj.* $\Delta N_{1(60)}$	*Equiv. Sand* $N_{1(60)cs}$	$K\sigma$	M = 7.5 Available CRR	M =7.5 Induced CSR*	**Liquefac. Safety Factor**	*Post FC Adj.* $\Delta N_{1(60)}$	$N_{1(60)cs}$	Volumetric *Strain (%)*	**Induced Subsidence (in.)**	p (tsf)	G_{max} (tsf)	τ_{av} (tsf)	Shear Strain γ	Strain E_{15}	Strain Enc	**Dry Sand Subsidence (in.)**
								0.000																								
4.0	5	**50**	1	130	29	4.0	7.0	0.259	0.259	0.99	1.70	0.75	1.00	84.8	100	10.0	94.8	1.00	Infin.	0.533	**Non-Liq.**	10.0	94.8	0.01	**0.00**	0.174	849	0.106	2.5E-04	3.9E-05	3.5E-05	**0.00**
7.0	2	**50**	1	130	29	6.5	9.5	0.421	0.343	0.99	1.70	0.75	1.00	84.8	100	10.0	94.8	1.00	Infin.	0.650	**Non-Liq.**	10.0	94.8	0.00	**0.00**	0.282	1,083	0.171	3.0E-04			
10.0	18	**11**	1	121	29	9.0	12.0	0.575	0.419	0.98	1.59	0.75	1.00	18.0	51	7.3	25.2	1.00	0.287	0.723	**0.40**	2.3	20.3	1.56	**0.56**	0.385	814	0.232	1.1E-03			
13.0	25	**16**	1	123	29	11.5	14.5	0.727	0.493	0.98	1.46	0.80	1.00	24.4	59	8.2	32.6	1.00	Infin.	0.772	**Non-Liq.**	8.2	32.6	0.00	**0.00**	0.487	997	0.292	9.1E-04			
18.0		**21**	1	125	8	16.5	19.5	1.038	0.648	0.97	1.28	0.89	1.30	41.2	77	0.8	42.0	1.00	Infin.	0.830	**Non-Liq.**	0.8	42.0	0.00	**0.00**	0.696	1,296	0.413	8.0E-04			
23.0		**24**	1	125	30	21.5	24.5	1.351	0.805	0.95	1.15	0.95	1.30	45.2	80	10.0	55.2	1.00	Infin.	0.859	**Non-Liq.**	10.0	55.2	0.00	**0.00**	0.905	1,619	0.530	7.0E-04			
28.5		**15**	1	125	30	26.5	29.5	1.663	0.961	0.94	1.05	1.00	1.25	26.1	61	8.7	34.8	1.00	Infin.	0.870	**Non-Liq.**	8.7	34.8	0.00	**0.00**	1.114	1,540	0.641	1.1E-03			
33.0		**8**		115	82	31.5	34.5	1.961	1.103	0.91	1.00	1.00	1.13	12.0				0.99	Infin.	0.878	**Non-Liq.**		12.0	0.00	**0.00**	1.314						
38.0		**21**	1	120	35	36.5	39.5	2.257	1.243	0.88	0.92	1.00	1.30	33.5	69	10.0	43.5	0.95	Infin.	0.900	**Non-Liq.**	10.0	43	0.00	**0.00**	1.512	1,933	0.817	9.0E-04			
43.0		**18**	1	120	35	41.5	44.5	2.557	1.387	0.84	0.87	1.00	1.25	26.2	61	10.0	36.2	0.92	Infin.	0.899	**Non-Liq.**	10.0	36.2	0.00	**0.00**	1.713	1,935	0.882	9.9E-04			
48.0		**25**	1	120	35	46.5	49.5	2.857	1.531	0.79	0.83	1.00	1.30	35.9	72	10.0	45.9	0.86	Infin.	0.916	**Non-Liq.**	10.0	45.9	0.00	**0.00**	1.914	2,215	0.927	7.8E-04			
51.5		**50**	1	125	5	51.5	54.5	3.166	1.684	0.74	0.79	1.00	1.30	68.5	99	0.0	68.5	0.83	Infin.	0.897	**Non-Liq.**	0.0	68.5	0.00	**0.00**	2.121	2,664	0.961	5.7E-04			

EARTH SYSTEMS - EVALUATION OF LIQUEFACTION POTENTIAL AND INDUCED SUBSIDENCE

Fire Station No. 7 **Project No: 306642-001**

1996/1998 NCEER Method
Ground Compaction Remediated to 7 foot depth

Boring: B-1 **Earthquake Magnitude: 7.1** **PGA, g: 0.95** **Calc GWT (feet): 4**

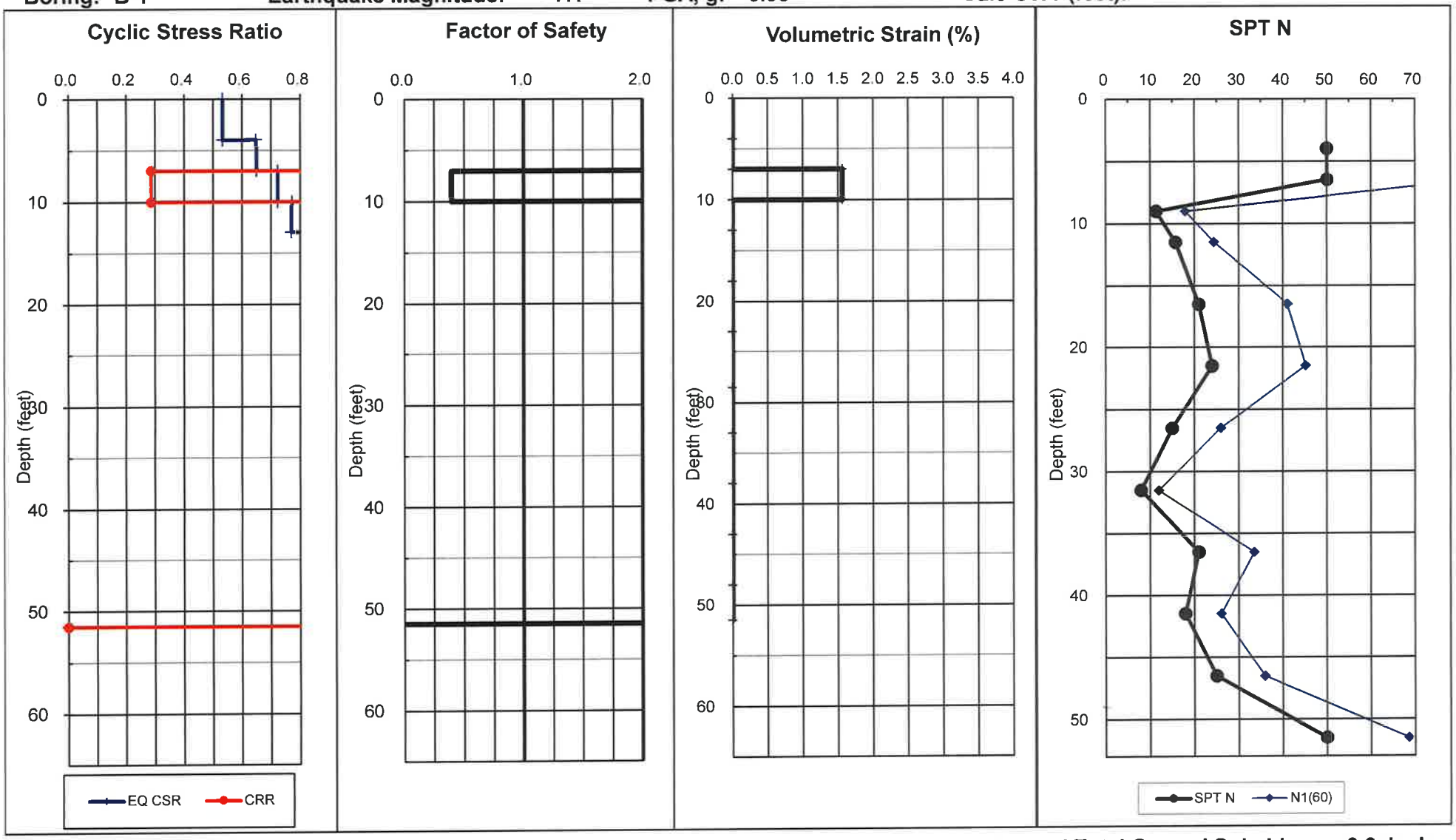

Total Thickness of Liquefiable Layers: 3.0 feet

Estimated Total Ground Subsidence: 0.6 inches

LIQUEFY-v2dot45.XLS - A SPREADSHEET FOR EMPIRICAL ANALYSIS OF LIQUEFACTION POTENTIAL AND INDUCED GROUND SUBSIDENCE

Coryright & Developed 2007 by Shelton L. Stringer, PE, GE, PG , EG - Earth Systems Southwest

(Modified by R. Beard to use 2/3's PGAm for Seismic Induced Settlement of Dry Sands)

Project: Fire Station No. 7
Job No: 306642-001
Date: 8/14/2024
Boring: B-2 Data Set: 2

Methods:
Journal of Geotechnical and Enviromental Engineering (JGEE), October 2001, Vol 127, No. 10, ASCE
Settlement Analysis from Tokimatsu and Seed (1987), JGEE,Vol 113, No.8, ASCE
Modified by Pradel, JGEE, Vol 124, No. 4, ASCE

EARTHQUAKE INFORMATION:

Magnitude:	7.1	7.5
PGA, g:	0.95	0.83
MSF:	1.15	
GWT:	4.0	feet
Calc GWT:	4.0	feet
Remediate to:	7.0	feet

SPT N VALUE CORRECTIONS:

Energy Correction to N60 (C_E):	1.33	Automatic Hammer
Drive Rod Corr. (C_R):	1	Default
Rod Length above ground (feet):	3.0	
Borehole Dia. Corr. (C_B):	1.00	
Sampler Liner Correction for SPT?:	1.0	Yes
Cal Mod/ SPT Ratio:	0.63	

Threshold Acceler., g: 0.33

Total (ft) Liquefied Thickness	Total (in.) Induced Subsidence
10.5	1.8
	upper 50 ft

Required SF: 1.30
Minimum Calculated SF: 0.34

SETTLEMENT (SUBSIDENCE) OF DRY SANDS

Nc = 11.6

Base Depth (feet)	Cal Mod N	SPT N	Liquef. Suscept. (0 or 1)	Total Unit Wt. (pcf)	Fines Content (%)	Depth of SPT (feet)	Rod Length (feet)	Tot.Stress at SPT po (tsf)	Eff.Stress at SPT p'o (tsf)	rd	C_N	C_R	C_S	$N_{1(60)}$	Rel. Dens. Dr (%)	*Trigger FC Adj.* $\Delta N_{1(60)}$	*Equiv. Sand* $N_{1(60)CS}$	Kσ	M = 7.5 Available CRR	M =7.5 Induced CSR*	**Liquefac. Safety Factor**	*Post FC Adj.* $\Delta N_{1(60)}$	$N_{1(60)CS}$	Volumetric *Strain (%)*	**Induced Subsidence (in.)**	p (tsf)	G_{max} (tsf)	τ_{av} (tsf)	Shear Strain γ	Strain E_{15}	Strain Enc	**Dry Sand Subsidence (in.)**
								0.000																									
4.0	12	**50**	1	130	35	4.0	7.0	0.259	0.259	0.99	1.70	0.75	1.00	84.8	100	10.0	94.8	1.00	Infin.	0.533	**Non-Liq.**	10.0	94.8	0.01	**0.00**	0.174	849	0.106	2.5E-04	3.9E-05	3.5E-05	**0.00**
7.0	4	**50**	1	107	59	6.5	9.5	0.393	0.315	0.99	1.70	0.75	1.00	84.8	100	10.0	94.8	1.00	Infin.	0.661	**Non-Liq.**	10.0	94.8	0.00	**0.00**	0.263	1,046	0.160	2.9E-04			
10.0	31	**20**	1	118	4	9.0	12.0	0.538	0.382	0.98	1.66	0.75	1.00	32.4	68	0.0	32.4	1.00	Infin.	0.742	**Non-Liq.**	0.0	32.4	0.00	**0.00**	0.360	856	0.217	8.4E-04			
14.0	24	**15**	1	129	4	11.5	14.5	0.693	0.459	0.98	1.52	0.80	1.00	24.3	59	0.0	24.3	1.00	0.271	0.791	**0.34**	0.0	24.3	1.28	**0.62**	0.465	882	0.279	1.2E-03			
18.0		**34**	1	125	35	16.5	19.5	1.011	0.621	0.97	1.31	0.89	1.30	68.1	99	10.0	78.1	1.00	Infin.	0.844	**Non-Liq.**	10.0	78.1	0.00	**0.00**	0.677	1,573	0.402	4.9E-04			
22.0		**38**	1	125	35	21.5	24.5	1.323	0.777	0.95	1.17	0.95	1.30	72.8	100	10.0	82.8	1.00	Infin.	0.871	**Non-Liq.**	10.0	82.8	0.00	**0.00**	0.887	1,835	0.519	5.2E-04			
28.5		**26**	1	125	35	26.5	29.5	1.636	0.934	0.94	1.06	1.00	1.30	47.7	83	10.0	57.7	1.00	Infin.	0.880	**Non-Liq.**	10.0	57.7	0.00	**0.00**	1.096	1,808	0.631	7.1E-04			
34.0		**38**	1	120	55	31.5	34.5	1.941	1.083	0.91	0.99	1.00	1.30	64.9	96	10.0	74.9	0.99	Infin.	0.886	**Non-Liq.**	10.0	74.9	0.00	**0.00**	1.300	2,149	0.729	6.1E-04			
38.0		**15**	1	120	78	36.5	39.5	2.241	1.227	0.88	0.93	1.00	1.22	22.6	57	9.5	32.2	0.96	Infin.	0.902	**Non-Liq.**	9.5	32	0.00	**0.00**	1.501	1,742	0.812	1.1E-03			
43.0		**18**	1	125	35	41.5	44.5	2.550	1.380	0.84	0.88	1.00	1.25	26.2	61	10.0	36.2	0.92	Infin.	0.900	**Non-Liq.**	10.0	36.2	0.00	**0.00**	1.708	1,933	0.879	9.8E-04			
48.0		**20**	1	125	61	46.5	49.5	2.862	1.536	0.79	0.83	1.00	1.26	27.9	63	10.0	37.9	0.89	Infin.	0.882	**Non-Liq.**	10.0	37.9	0.00	**0.00**	1.918	2,080	0.929	8.8E-04			
53.0		**50**	1	130	4	51.5	54.5	3.183	1.701	0.74	0.79	1.00	1.30	68.2	99	0.0	68.2	0.83	Infin.	0.896	**Non-Liq.**	0.0	68.2	0.00	**0.00**	2.133	2,667	0.967	5.7E-04			
55.0		**34**	1	130	4	56.5	59.5	3.508	1.870	0.69	0.75	1.00	1.30	44.2	79	0.0	44.2	0.80	Infin.	0.872	**Non-Liq.**	0.0	44.2	0.00	**0.00**	2.351	2,423	0.996	6.9E-04			
59.0		**15**	1	125	47	56.5	59.5	3.505	1.867	0.69	0.75	1.00	1.18	17.7	50	8.5	26.3	0.84	0.305	0.824	**0.37**	3.8	21.5	1.48	**0.71**	2.348	2,036	0.995	9.7E-04			
61.5		**14**	1	120	62	61.5	64.5	3.811	2.017	0.65	0.72	1.00	1.16	15.7	47	8.1	23.8	0.88	0.264	0.747	**0.35**	4.5	20.1	1.58	**0.47**	2.553	2,055	1.016	9.5E-04			

EARTH SYSTEMS - EVALUATION OF LIQUEFACTION POTENTIAL AND INDUCED SUBSIDENCE

Fire Station No. 7 **Project No: 306642-001**

1996/1998 NCEER Method
Ground Compaction Remediated to 7 foot depth

Boring: B-2 **Earthquake Magnitude: 7.1** **PGA, g: 0.95** **Calc GWT (feet): 4**

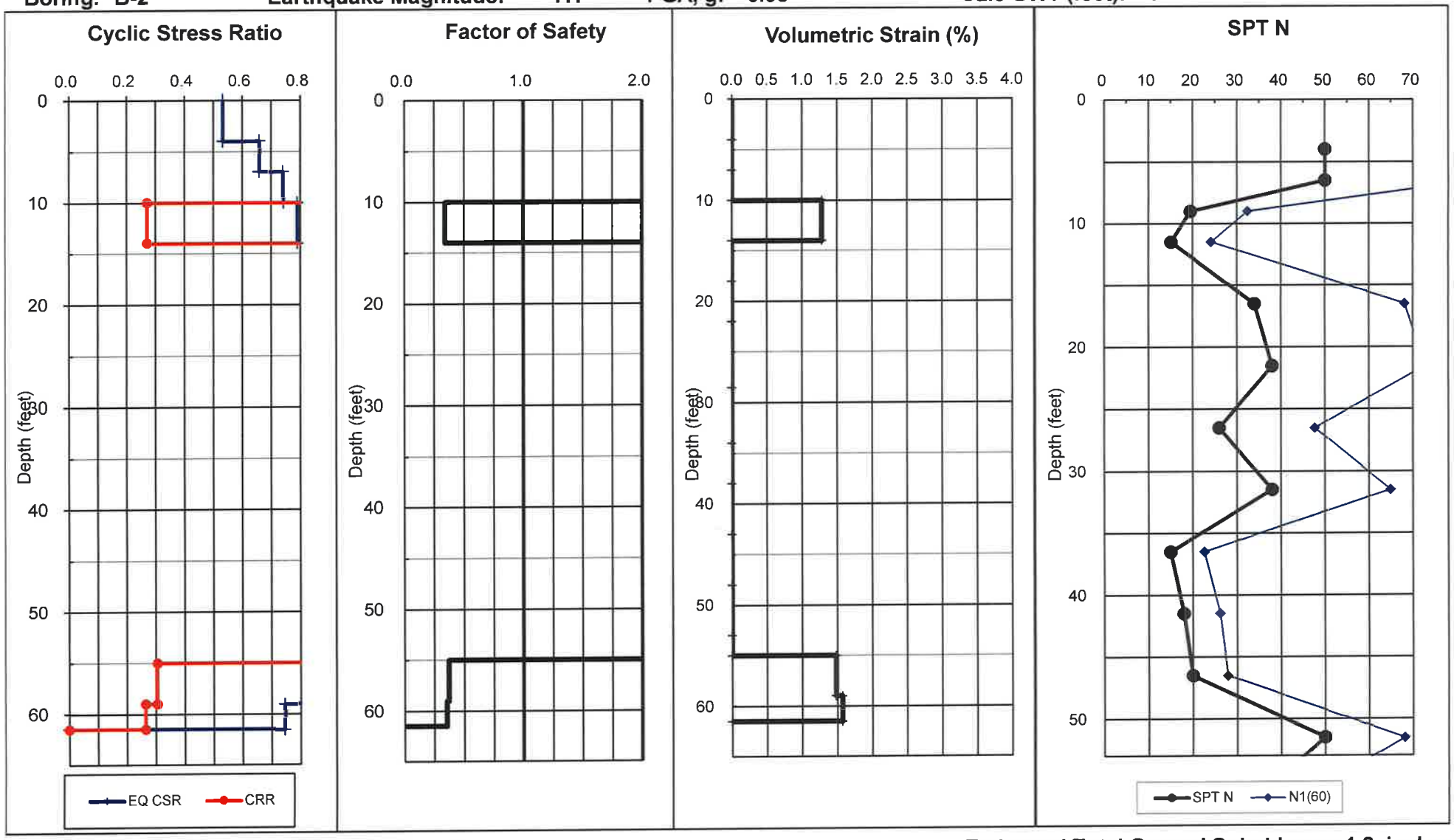

Total Thickness of Liquefiable Layers: 10.5 feet

Estimated Total Ground Subsidence: 1.8 inches

LIQUEFY-v2dot45.XLS - A SPREADSHEET FOR EMPIRICAL ANALYSIS OF LIQUEFACTION POTENTIAL AND INDUCED GROUND SUBSIDENCE

Coryright & Developed 2007 by Shelton L. Stringer, PE, GE, PG , EG - Earth Systems Southwest

(Modified by R. Beard to use 2/3's PGAm for Seismic Induced Settlement of Dry Sands)

Project: Fire Station No. 7
Job No: 306642-001
Date: 8/14/2024
Boring: B-3 Data Set: 3

Methods:
Journal of Geotechnical and Enviromental Engineering (JGEE), October 2001, Vol 127, No. 10, ASCE
Settlement Analysis from Tokimatsu and Seed (1987), JGEE,Vol 113, No.8, ASCE
Modified by Pradel, JGEE, Vol 124, No. 4, ASCE

EARTHQUAKE INFORMATION:

Magnitude:	7.1	7.5
PGA, g:	0.95	0.83
MSF:	1.15	
GWT:	6.0	feet
Calc GWT:	4.0	feet
Remediate to:	7.0	feet

SPT N VALUE CORRECTIONS:

Energy Correction to N60 (C_E):	1.33	Automatic Hammer
Drive Rod Corr. (C_R):	1	Default
Rod Length above ground (feet):	3.0	
Borehole Dia. Corr. (C_B):	1.00	
Sampler Liner Correction for SPT?:	1.0	Yes
Cal Mod/ SPT Ratio:	0.63	

Threshold Acceler., g: 0.17

Total (ft) Liquefied Thickness	Total (in.) Induced Subsidence
18.5	3.5

upper 50 ft

Required SF: 1.30
Minimum Calculated SF: 0.18

SETTLEMENT (SUBSIDENCE) OF DRY SANDS

Nc = 11.6

Base Depth (feet)	Cal Mod N	SPT N	Liquef. Suscept. (0 or 1)	Total Unit Wt. (pcf)	Fines Content (%)	Depth of SPT (feet)	Rod Length (feet)	Tot.Stress at SPT po (tsf)	Eff.Stress at SPT p'o (tsf)	rd	C_N	C_R	C_S	$N_{1(60)}$	Rel. Dens. Dr (%)	*Trigger FC Adj.* $\Delta N_{1(60)}$	*Equiv. Sand* $N_{1(60)CS}$	$K\sigma$	M = 7.5 Available CRR	M =7.5 Induced CSR*	**Liquefac. Safety Factor**	*Post FC Adj.* $\Delta N_{1(60)}$	$N_{1(60)CS}$	Volumetric *Strain (%)*	**Induced Subsidence (in.)**	p (tsf)	G_{max} (tsf)	τ_{av} (tsf)	Shear Strain γ	Strain E_{15}	Strain Enc	**Dry Sand Subsidence (in.)**
								0.000																									
4.0		**50**	1	120	35	4.0	7.0	0.240	0.240	0.99	1.70	0.75	1.30	110.2	100	10.0	120.2	1.00	Infin.	0.533	**Non-Liq.**	10.0	120.2	0.00	**0.00**	0.161	885	0.098	2.0E-04	2.4E-05	2.1E-05	**0.00**
7.0		**50**	1	120	35	6.5	9.5	0.390	0.374	0.99	1.68	0.75	1.30	109.0	100	10.0	119.0	1.00	Infin.	0.662	**Non-Liq.**	10.0	119.0	0.00	**0.00**	0.261	1,124	0.158	2.5E-04			
10.0		**7**	1	120	3	9.0	12.0	0.540	0.446	0.98	1.54	0.75	1.13	12.1	42	0.0	12.1	1.00	0.131	0.741	**0.18**	0.0	12.1	2.31	**0.83**	0.362	618	0.218	3.1E-03			
12.0		**23**	1	120	3	11.5	14.5	0.690	0.518	0.98	1.43	0.80	1.30	45.2	80	0.0	45.2	1.00	Infin.	0.793	**Non-Liq.**	0.0	45.2	0.00	**0.00**	0.462	1,082	0.277	6.5E-04			
15.0		**21**	1	120	3	14.0	17.0	0.840	0.590	0.97	1.34	0.85	1.30	41.1	77	0.0	41.1	1.00	Infin.	0.829	**Non-Liq.**	0.0	41.1	0.00	**0.00**	0.563	1,158	0.336	7.6E-04			
17.5		**33**	1	120	3	16.5	19.5	0.990	0.662	0.97	1.26	0.89	1.30	64.0	96	0.0	64.0	1.00	Infin.	0.855	**Non-Liq.**	0.0	64.0	0.00	**0.00**	0.663	1,456	0.393	5.6E-04			
19.5		**20**	1	120	3	19.0	22.0	1.140	0.734	0.96	1.20	0.92	1.30	38.2	74	0.0	38.2	1.00	Infin.	0.874	**Non-Liq.**	0.0	38.2	0.00	**0.00**	0.764	1,316	0.450	8.9E-04			
22.0		**20**	1	120	3	21.5	24.5	1.290	0.806	0.95	1.15	0.95	1.30	37.6	73	0.0	37.6	1.00	Infin.	0.887	**Non-Liq.**	0.0	37.6	0.00	**0.00**	0.864	1,393	0.506	9.4E-04			
27.0		**16**	1	120	3	24.0	27.0	1.440	0.878	0.95	1.10	0.97	1.27	29.0	64	0.0	29.0	1.00	0.374	0.896	**0.42**	0.0	29	0.95	**0.57**	0.965	1,349	0.560	1.2E-03			
29.5		**16**	1	120	35	29.0	32.0	1.740	1.022	0.93	1.02	1.00	1.26	27.3	62	10.0	37.3	1.00	Infin.	0.901	**Non-Liq.**	10.0	37.3	0.00	**0.00**	1.166	1,612	0.663	1.0E-03			
32.0		**11**	1	120	74	31.5	34.5	1.890	1.094	0.91	0.98	1.00	1.17	16.9	49	8.4	25.2	1.00	0.287	0.893	**0.32**	5.0	21.8	1.46	**0.44**	1.266	1,476	0.710	1.4E-03			
34.5		**13**	1	120	43	34.0	37.0	2.040	1.166	0.90	0.95	1.00	1.20	19.7	53	8.9	28.7	0.99	0.363	0.902	**0.40**	3.4	23.2	1.37	**0.41**	1.367	1,599	0.754	1.3E-03			
37.0		**16**	1	120	57	36.5	39.5	2.190	1.238	0.88	0.92	1.00	1.24	24.3	59	9.9	34.2	0.97	Infin.	0.908	**Non-Liq.**	9.9	34.2	0.00	**0.00**	1.467	1,757	0.793	1.1E-03			
40.0		**9**	1	120	55	39.0	42.0	2.340	1.310	0.86	0.90	1.00	1.13	12.1	42	7.4	19.6	0.97	0.211	0.894	**0.24**	4.2	16.3	1.85	**0.67**	1.568	1,508	0.828	1.7E-03			
42.5		**10**	1	120	37	41.5	44.5	2.490	1.382	0.84	0.87	1.00	1.14	13.3	44	7.7	20.9	0.96	0.227	0.886	**0.26**	3.0	16.2	1.86	**0.56**	1.668	1,591	0.858	1.5E-03			
44.0		**17**	1	120	37	44.0	47.0	2.640	1.454	0.81	0.85	1.00	1.23	23.7	58	9.7	33.5	0.92	Infin.	0.899	**Non-Liq.**	9.7	33.5	0.00	**0.00**	1.769	1,916	0.884	9.9E-04			
47.0		**24**	1	120	37	46.5	49.5	2.790	1.526	0.79	0.83	1.00	1.30	34.5	70	10.0	44.5	0.88	Infin.	0.919	**Non-Liq.**	10.0	44.5	0.00	**0.00**	1.869	2,166	0.906	7.8E-04			
49.5		**20**	1	120	39	49.0	52.0	2.940	1.598	0.76	0.81	1.00	1.26	27.3	62	10.0	37.3	0.89	Infin.	0.877	**Non-Liq.**	10.0	37.3	0.00	**0.00**	1.970	2,095	0.923	8.5E-04			
52.0		**26**	1	120	39	51.5	54.5	3.090	1.670	0.74	0.80	1.00	1.30	35.8	71	10.0	45.8	0.85	Infin.	0.900	**Non-Liq.**	10.0	45.8	0.00	**0.00**	2.070	2,301	0.938	7.1E-04			
54.5		**81**	1	125	39	54.5	57.5	3.276	1.763	0.71	0.77	1.00	1.30	108.5	100	10.0	118.5	0.83	Infin.	0.885	**Non-Liq.**	10.0	118	0.00	**0.00**	2.195	3,253	0.955	4.1E-04			
57.0		**43**	1	125	40	56.5	59.5	3.401	1.826	0.69	0.76	1.00	1.30	56.6	90	10.0	66.6	0.82	Infin.	0.876	**Non-Liq.**	10.0	66.6	0.00	**0.00**	2.279	2,735	0.965	5.4E-04			
59.0		**32**	1	125	40	59.0	62.0	3.558	1.904	0.67	0.75	1.00	1.30	41.2	77	10.0	51.2	0.80	Infin.	0.864	**Non-Liq.**	10.0	51.2	0.00	**0.00**	2.384	2,563	0.978	6.0E-04			

EARTH SYSTEMS - EVALUATION OF LIQUEFACTION POTENTIAL AND INDUCED SUBSIDENCE

Fire Station No. 7 **Project No: 306642-001** 1996/1998 NCEER Method

Ground Compaction Remediated to 7 foot depth

Boring: B-3 **Earthquake Magnitude: 7.1** **PGA, g: 0.95** **Calc GWT (feet): 4**

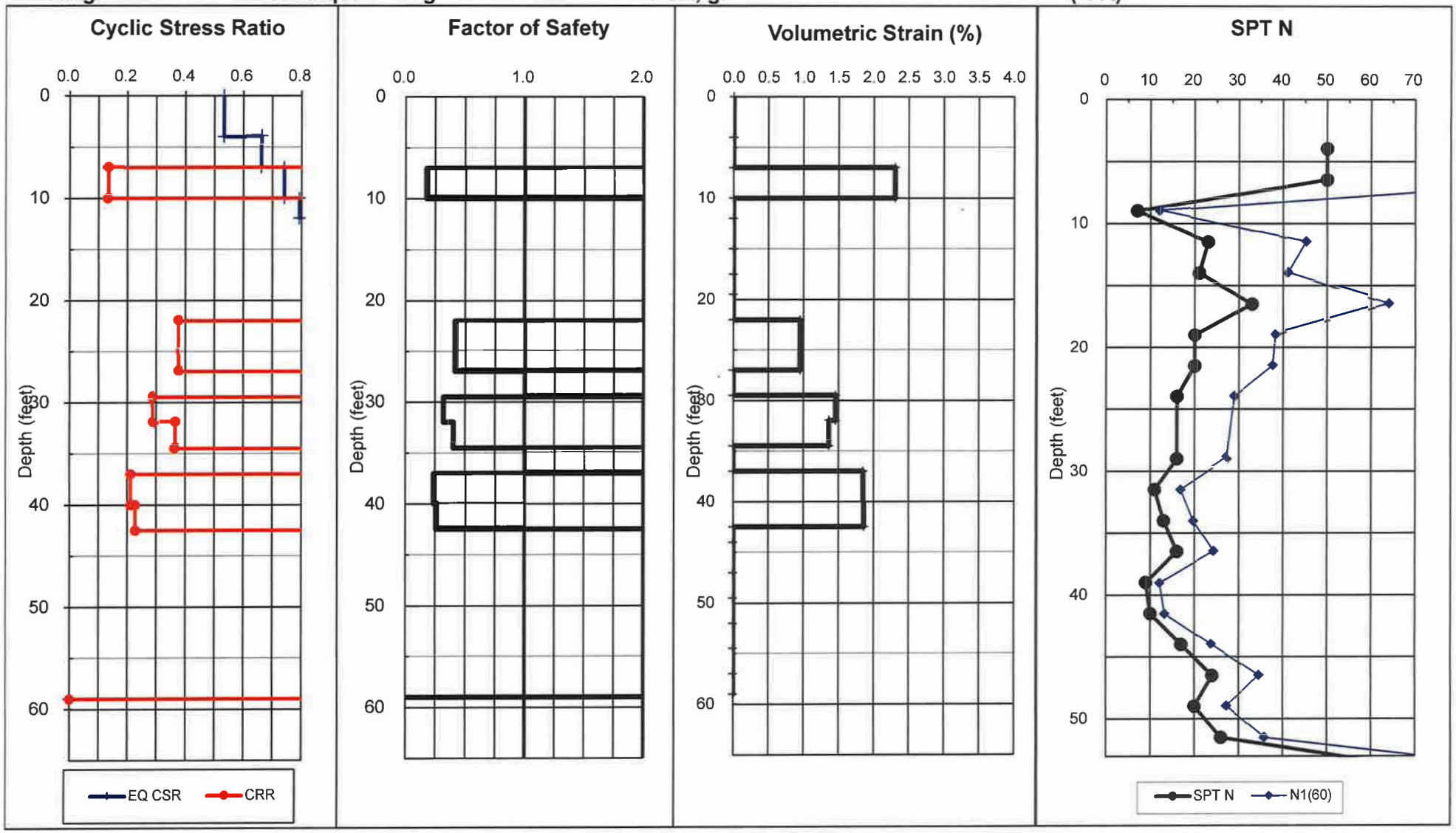

Total Thickness of Liquefiable Layers: 18.5 feet **Estimated Total Ground Subsidence: 3.5 inches**

Results of Lateral Spreading Analysis

Job Number: 306642-001
Job Name: Fire Station #7
Boring Number: B-3
Date: August 6, 2024
Calculated By: APM

Prediction of Liquefaction Induced Lateral Spreading with Ground Slope Conditions

Based on Data Published in the ASCE Journal of Geotechnicial and Geoenvironmental Engineering December 2002
(Youd, Hansen, and Bartlett, 2002)

Variables Used in Calculation Defined

Earthquake Magnitude (M)
Horizontal Distance to Nearest Seismic Energy Source, km (R)
Percent Slope (S)
Cumulative Thickness in Meters of Saturated Cohesionless Sediments with SPT $(N1)_{60}$ Values <= 15 (T_{15})
Average Fines Content in Percent (F_{15})
Mean Grain size in milimeters ($D50_{15}$)

$$\text{Log } D_H = -16.213 + 1.532M - 1.406\text{Log}(R + 10^{(0.89M - 5.64)}) - 0.012R + 0.338\text{Log}S + 0.540\text{Log}T_{15} + 3.413\text{Log}(100 - F_{15}) - 0.795\text{Log}(D50_{15} + 0.1\text{mm})$$

Requirements and Limitations Used to Develop this Model

Soils must be Liquefiable
Saturated Cohesionless Sediments with SPT $(N1)_{60}$ less than 15
Earthquake Magnitude (M) must be between 6 and 8
Percent Slope (S) must be between 0.1% and 6%
Cumulative Thickness (T15) must be between 1 and 15 meters
Depth to top of Liquefied layer must be between 1 and 10 meters
Distance to Fault Rupture (R_{eq}) must be determined using Figure 10 if soft soils are present.
F_{15} and $D50_{15}$ must be within bounds shown in Fig. 5.
If R or R_{eq} < 0.5 km use 0.5; otherwise use R or R_{eq}.

Input Values	
M = 7.02	
R = 8.46	km
S = 1.5	%
T_{15} = 2.59	m
F_{15} = 37	%
$D50_{15}$ = 0.27	mm

Horizontal Ground Displacement in meters (D_H) = 0.46
Horizontal Ground Displacement in feet (D_H) = 1.5

Displacements should be between 0.1 and 6 meters and should be multiplied by a FOS of 2 for a conservative estimate. Any displacement greater than 6 meters is outside of the data set used in the analysis and may not be an accurate estimate.

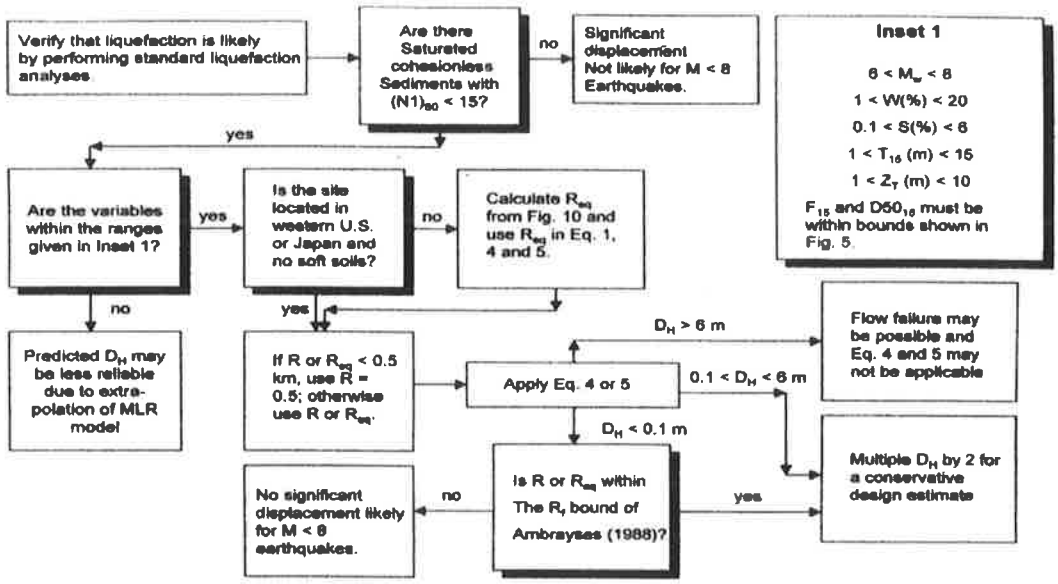

Fig. 9. Flow chart [for application of Eq. (6)]

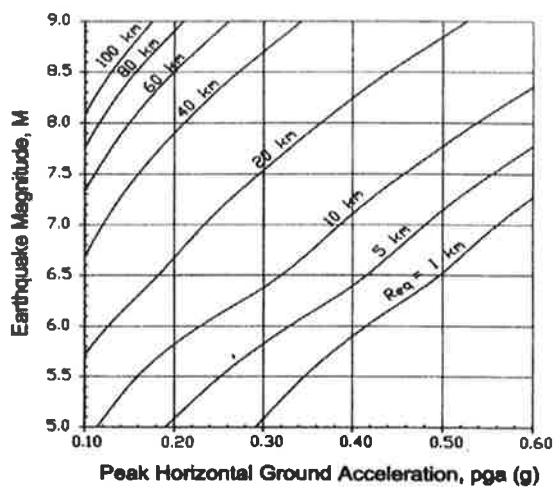

Fig. 10. Graph for determining equivalent source distance, R_{eq}, from magnitude, M, and peak acceleration, a_{max} (revised from Bartlett and Youd 1992, 1995). The above curves are the averages of pga from three different attenuation relations: Abrahamson and Silva (1997); Boore et al. (1997); and Campbell (1997). For the Abrahamson and Silva (1997) relation, the following parameters were used in the regression equation: a) R equals the distance to the fault rupture, b) fault type was set to "otherwise", c) HW=hanging wall factor was set to 1, which implies that sites are found on the hanging wall, d) site classification was set to 1 for deep soil sites. For the Boore, Joyner and Fumal (1997) relation, the following parameters were used in the regression equation: a) R is the closest horizontal distance (km) to a vertical projection of fault rupture surface (km), b) Vs in the upper 30 meters was set to 270 m/s, which is the mid range for a medium stiff soil (site class D), c) fault type was set to "fault mechanism not specified." For the Campbell (1997) relation, the following parameters were used in the regression equation: a) R is the closest distance to the seismogenic rupture surface (km), b) fault style factor was set to "otherwise", c) soft rock and hard rock site factors were set to "otherwise", which implies a stiff soil site.

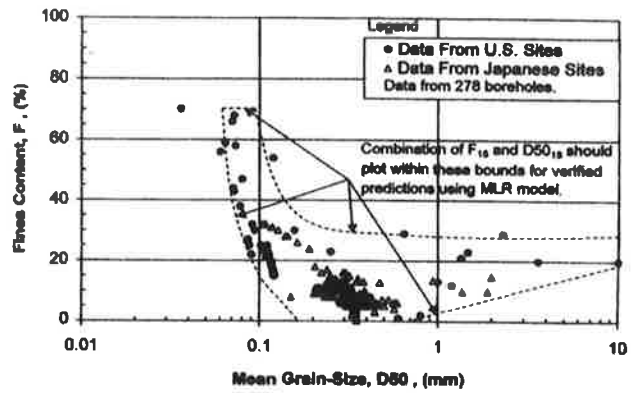

Fig. 5. Compiled grain-size data with ranges of F_{15} and $D50_{15}$ [for which Eq. (6) is applicable]

APPENDIX D – CITY STANDARD DETAILS

FIG. 1

90° TEE

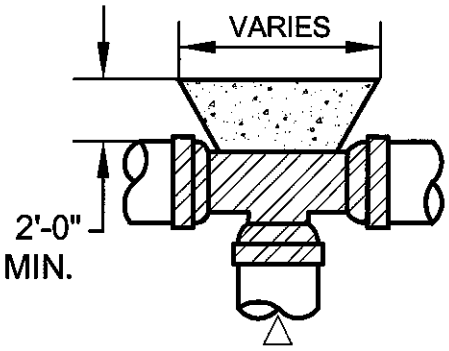

PIPE	1000 P.S.F.	2000 P.S.F.
4"	4.0 sq. ft.	2.0 sq. ft.
6"	8.0 sq. ft.	4.0 sq. ft.
8"	13.0 sq. ft.	7.0 sq. ft.
10"	22.0 sq. ft.	11.0 sq. ft.
12"	31.0 sq. ft.	15.0 sq. ft.
* 14"	42.0 sq. ft.	21.0 sq. ft.
* 16"	54.0 sq. ft.	27.0 sq. ft.

FIG. 2

90° BEND

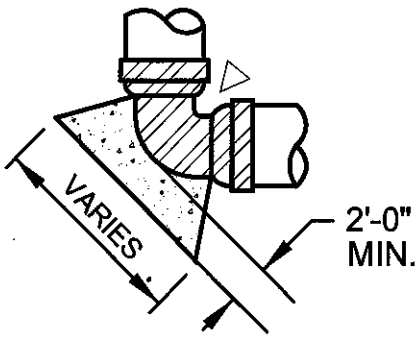

PIPE	1000 P.S.F.	2000 P.S.F.
4"	5.0 sq. ft.	3.0 sq. ft.
6"	11.0 sq. ft.	5.0 sq. ft.
8"	19.0 sq. ft.	9.0 sq. ft.
10"	30.0 sq. ft.	15.0 sq. ft.
12"	43.0 sq. ft.	22.0 sq. ft.
* 14"	59.0 sq. ft.	29.0 sq. ft.
* 16"	76.0 sq. ft.	38.0 sq. ft.

FIG.3

45° TEE

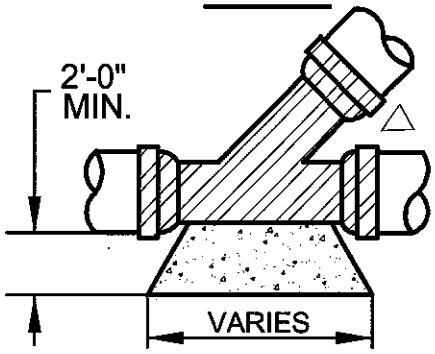

PIPE	1000 P.S.F.	2000 P.S.F.
4"	3.0 sq. ft.	1.0 sq. ft.
6"	6.0 sq. ft.	3.0 sq. ft.
8"	10.0 sq. ft.	5.0 sq. ft.
10"	16.0 sq. ft.	8.0 sq. ft.
12"	23.0 sq. ft.	12.0 sq. ft.
* 14"	32.0 sq. ft.	16.0 sq. ft.
* 16"	41.0 sq. ft.	21.0 sq. ft.

FIG.4

22-1/2°BEND

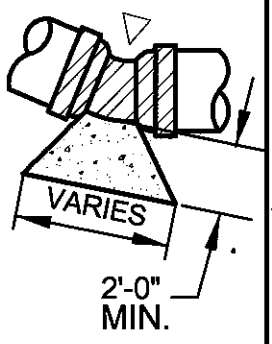

45° BEND

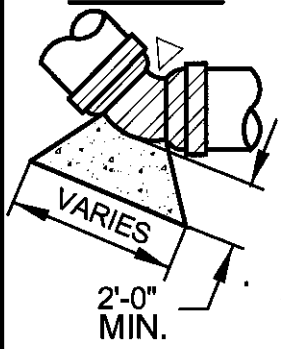

PIPE	1000 P.S.F.	2000 P.S.F.	1000 P.S.F.	2000 P.S.F.
4"	1.0 sq. ft.	1.0 sq. ft.	3.0 sq. ft.	1.0 sq. ft.
6"	3.0 sq. ft.	1.5 sq. ft.	6.0 sq. ft.	3.0 sq. ft.
8"	5.0 sq. ft.	2.5 sq. ft.	10.0 sq. ft.	5.0 sq. ft.
10"	8.0 sq. ft.	4.0 sq. ft.	16.0 sq. ft.	8.0 sq. ft.
12"	12.0 sq. ft.	6.0 sq. ft.	23.0 sq. ft.	12.0 sq. ft.
*14"	16.0 sq. ft.	8.0 sq. ft.	32.0 sq. ft.	16.0 sq. ft.
*16"	21.0 sq. ft.	10.0 sq. ft.	41.0 sq. ft.	21.0 sq. ft.

* ENGINEER TO DETERMINE CONFIGURATION

◁ DIRECTION OF THRUST

CITY OF SAN BUENAVENTURA

PUBLIC WORKS DEPARTMENT
ENGINEERING DIVISION

THRUST BLOCKING

STD. DET. NO.
006

APPROVED BY: _____ WATER GENERAL MANAGER

APPROVED BY _____ CITY ENGINEER R.C.E. 37064 DATE 7-7-16

SHEET 1 of 4

FIG.5

CROSS

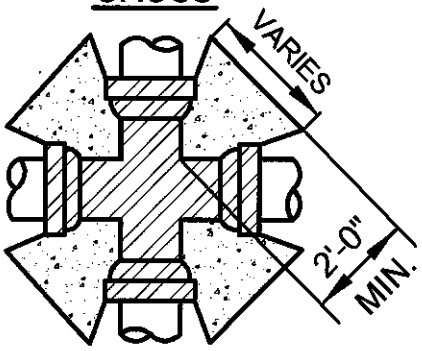

PIPE	1000 P.S.F.	2000 P.S.F.
4"	2.0/ea. sq. ft.	1.0/ea. sq. ft.
6"	4.0/ea. sq. ft.	2.0/ea. sq. ft.
8"	7.0/ea. sq. ft.	3.0/ea. sq. ft.
10"	11.0/ea. sq. ft.	5.0/ea. sq. ft.
12"	18.0/ea. sq. ft.	9.0/ea. sq. ft.
* 14"	21.0/ea. sq. ft.	10.0/ea. sq. ft.
* 16"	27.0/ea. sq. ft.	13.0/ea. sq. ft.

FIG.6

BLIND PLUGGED 90° TEE

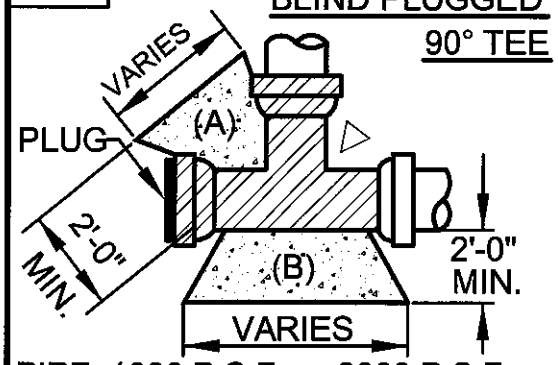

PIPE	1000 P.S.F. (A) (B)	2000 P.S.F. (A) (B)
4"	3.0-3.0 sq. ft.	1.0-1.0 sq. ft.
6"	5.0-5.0 sq. ft.	3.0-3.0 sq. ft.
8"	9.0-9.0 sq.ft.	5.0-5.0 sq. ft.
10"	15.0-15.0 sq. ft.	8.0-8.0 sq. ft
12"	21.0-21.0 sq.ft.	11.0-11.0 sq. ft.
* 14"	29.0-29.0 sq. ft.	15.0-15.0 sq. ft.
* 16"	38.0-38.0 sq. ft.	19.0-19.0 sq. ft.

FIG.7

BLIND DOUBLE PLUGGED CROSS

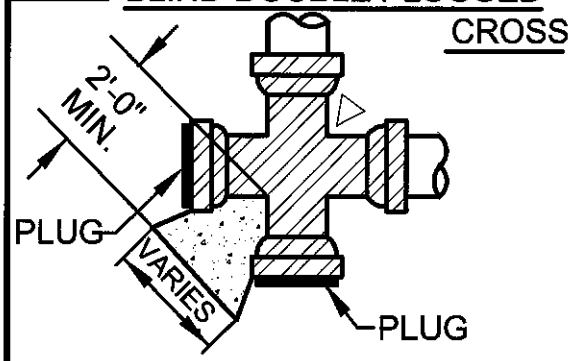

PIPE	1000P.S.F.	2000 P.S.F.
4"	5.0 sq. ft.	3.0 sq. ft.
6"	11.0 sq. ft.	5.0 sq. ft.
8"	19.0 sq. ft.	9.0 sq. ft.
10"	30.0 sq. ft.	15.0 sq. ft.
12"	43.0 sq. ft.	22.0 sq. ft.
* 14"	59.0 sq. ft.	29.0 sq. ft.
* 16"	76.0 sq. ft.	38.0 sq. ft.

FIG.8

CAP or PLUG

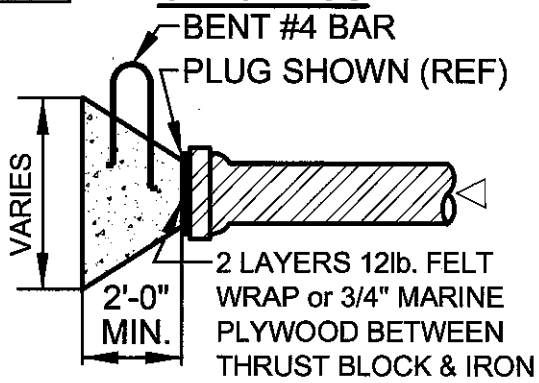

PIPE	1000 P.S.F.	2000 P.S.F.
4"	4.0 sq. ft.	2.0 sq. ft.
6"	8.0 sq. ft.	4.0 sq. ft.
8"	14.0 sq. ft.	7.0 sq. ft.
10"	22.0 sq. ft.	11.0 sq. ft.
12"	30.0 sq. ft.	15.0 sq. ft.
* 14"	42.0 sq. ft.	21.0 sq. ft.
* 16"	55.0 sq. ft.	27.0 sq. ft.

* ENGINEER TO DETERMINE CONFIGURATION

◁ DIRECTION OF THRUST

CITY OF SAN BUENAVENTURA

PUBLIC WORKS DEPARTMENT
ENGINEERING DIVISION

THRUST BLOCKING

STD. DET. NO. 006

APPROVED BY: _____ WATER GENERAL MANAGER

APPROVED BY _____ CITY ENGINEER R.C.E. 37064

DATE 7-7-16

SHEET 2 of 4

FIG. 9

VALVE ANCHOR BLOCK

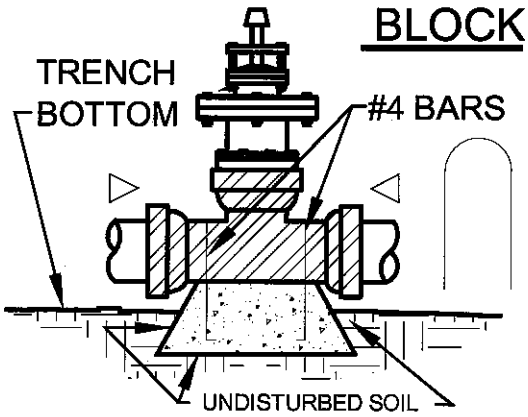

WORKING PRESSURE (P.S.I.)	SIZE OF VALVE REQUIRING ANCHOR
50-100	12" & UP
101-150	8" & UP
151-200	ALL SIZES

FIG.10

VERTICAL BEND

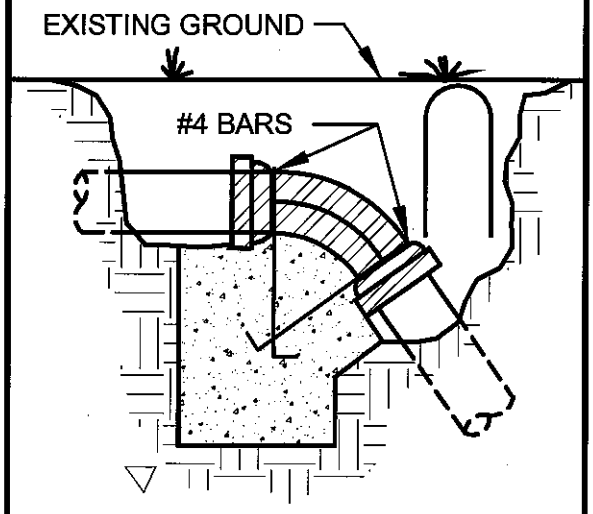

NOTE: SHAPE AND DIMENSION OF FIGS. 9 & 10 ANCHOR BLOCKS TO BE DETERMINED BY THE ENGINEER

FIRE HYDRANT BURY THRUST BLOCK

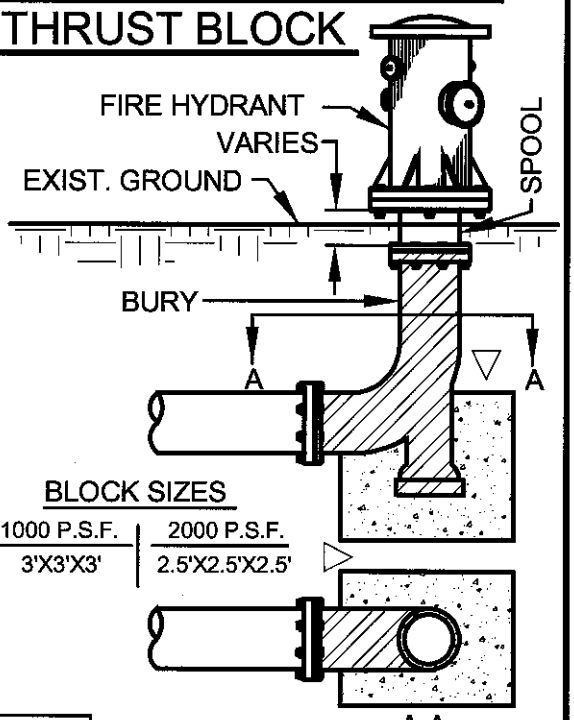

FIG.11

FIG.12 BLOCKING TECHNIQUE

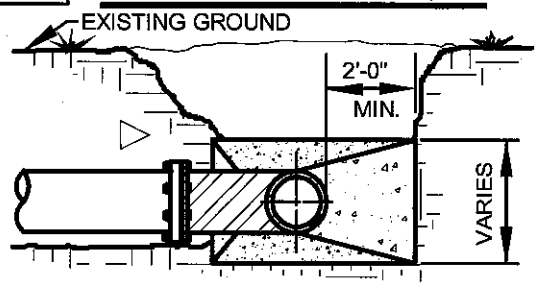

THE THRUST BLOCK SHOULD HAVE A PYRAMIDAL SHAPE IN ORDER TO DEVELOP MAXIMUM BEARING AREA

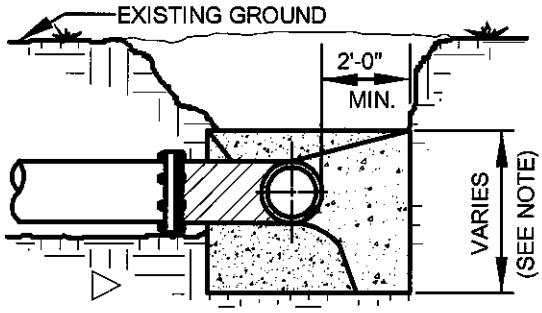

FOR HIGH PRESSURE AND OR LARGE DIAMETER PIPE, THE BEARING AREA MAY BE INCREASED AS SHOWN IN THE ABOVE SKETCH.

◁ DIRECTION OF THRUST

CITY OF SAN BUENAVENTURA

PUBLIC WORKS DEPARTMENT
ENGINEERING DIVISION

THRUST BLOCKING

STD. DET. NO. 006

APPROVED BY: WATER GENERAL MANAGER

APPROVED BY: CITY ENGINEER R.C.E. 37064

DATE 7-7-16

SHEET 3 of 4

GENERAL NOTES

1. SEE CITY STANDARD DETAIL 001 - GENERAL WATER NOTES.

2. BEARING AREAS INDICATED ARE DESIGNED FOR
   (A) 1000 P.S.F. (EXISTING SOFT CLAY)
   (B) 2000 P.S.F. (EXISTING SAND)

3. BEARING AREAS MAY BE INCREASED AT THE OPTION OF THE CITY, IF SOIL BEARING PRESSURE IS LESS THAN 1000 P.S.F.

4. APPROVAL OF COMPACTED BACKFILL MAY BE REQUIRED BY THE CITY TO IMPROVE THRUST BLOCK BEARING AREA TO A LEVEL EQUAL TO THIS STANDARD.

5. ALL BOLTED JOINTS OR EXPOSED METAL SHALL BE COATED PRIOR TO POURING OF THRUST BLOCKS. SEE GENERAL NOTE #5 (STD. DETAIL 001) FOR COATINGS. NOTE: ALL NUTS AND BOLTS SHALL BE INSTALLED IN A MANNER THAT WILL ALLOW THEIR REMOVAL WHEN NECESSARY.

6. UNLESS OTHERWISE NOTED, THRUST BLOCK BEARING FACES SHALL BE POURED AGAINST UNDISTURBED SOIL OR APPROVED COMPACTED BACKFILL.

7. THE THRUST BLOCK IS TO BE CAST IN SUCH A MANNER TO CRADLE THE PIPE FITTING. CONCRETE PLACEMENT SHALL BE PERPENDICULAR TO THE LINE OF THRUST, BUT NOT EXCEEDING 50% OF THE PIPE OR FITTING CIRCUMFERENCE. THE CONCRETE CLASS SHALL BE PER THE GREENBOOK.

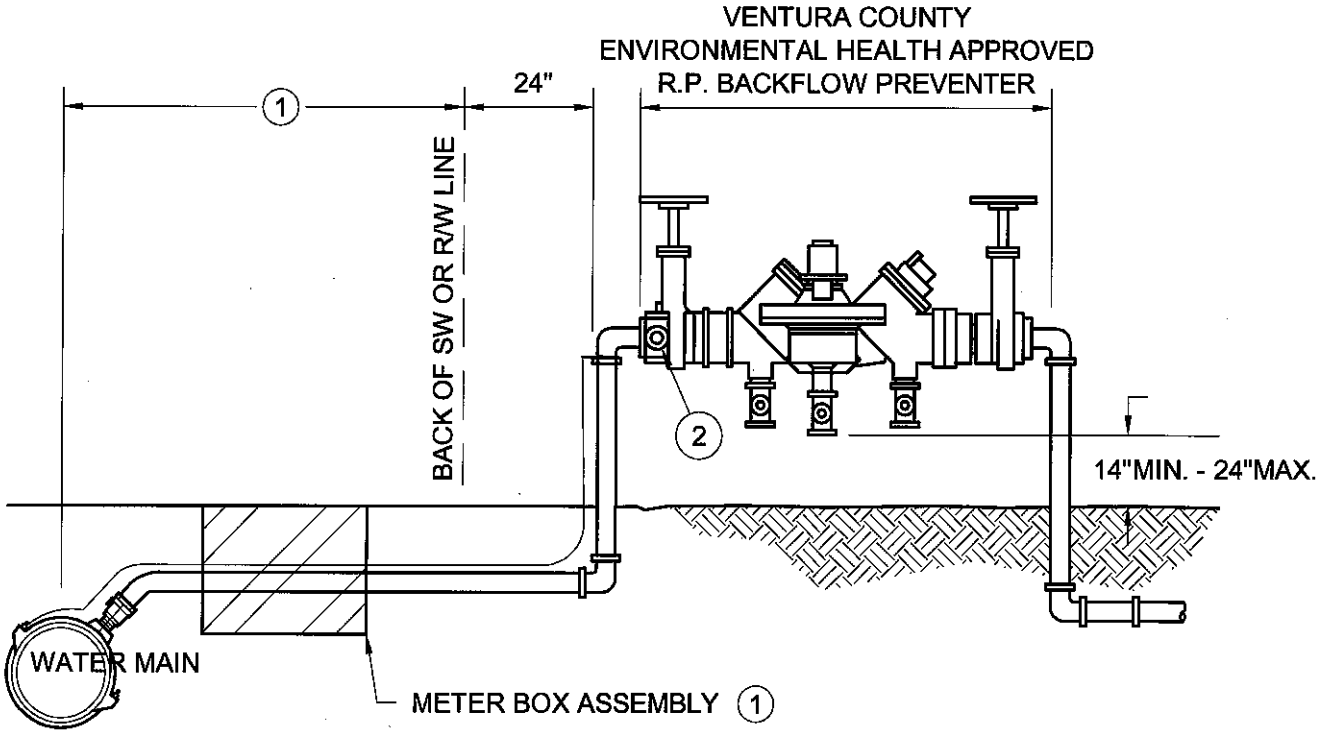

LEGEND

(1) CONSTRUCT SERVICE LINE AND WATER METER ASSEMBLY PER STANDARD DETAIL 009.

(2) 2" MINIMUM BRASS NIPPLE.

NOTES

1. SEE CITY STANDARD DETAIL 001 - GENERAL WATER NOTES
2. WHEN INSTALLED IN LOCATIONS SUBJECT TO DAMAGE FROM VEHICLES, BOLLARDS SHALL BE INSTALLED AS DIRECTED BY CITY ENGINEER.
3. ABOVE GROUND ASSEMBLY SHALL BE PAINTED BY CONTRACTOR WITH ONE COAT PRIMER AND TWO COATS HUNTERGREEN ENAMEL.
4. ALL IRRIGATION AND COMMERCIAL SERVICES REQUIRE BACKFLOW PREVENTERS. ALL RESIDENTIAL METERS LARGER THAN 1-INCH REQUIRE BACKFLOW PREVENTERS.

CITY OF SAN BUENAVENTURA	PUBLIC WORKS DEPARTMENT ENGINEERING DIVISION	
2" AND SMALLER METER AND BACKFLOW ASSEMBLY INSTALLATION		STD. DET. NO. 010
APPROVED BY: WATER GENERAL MANAGER	APPROVED BY CITY ENGINEER R.C.E. 37064 DATE 7-7-16	SHEET 1 of 3

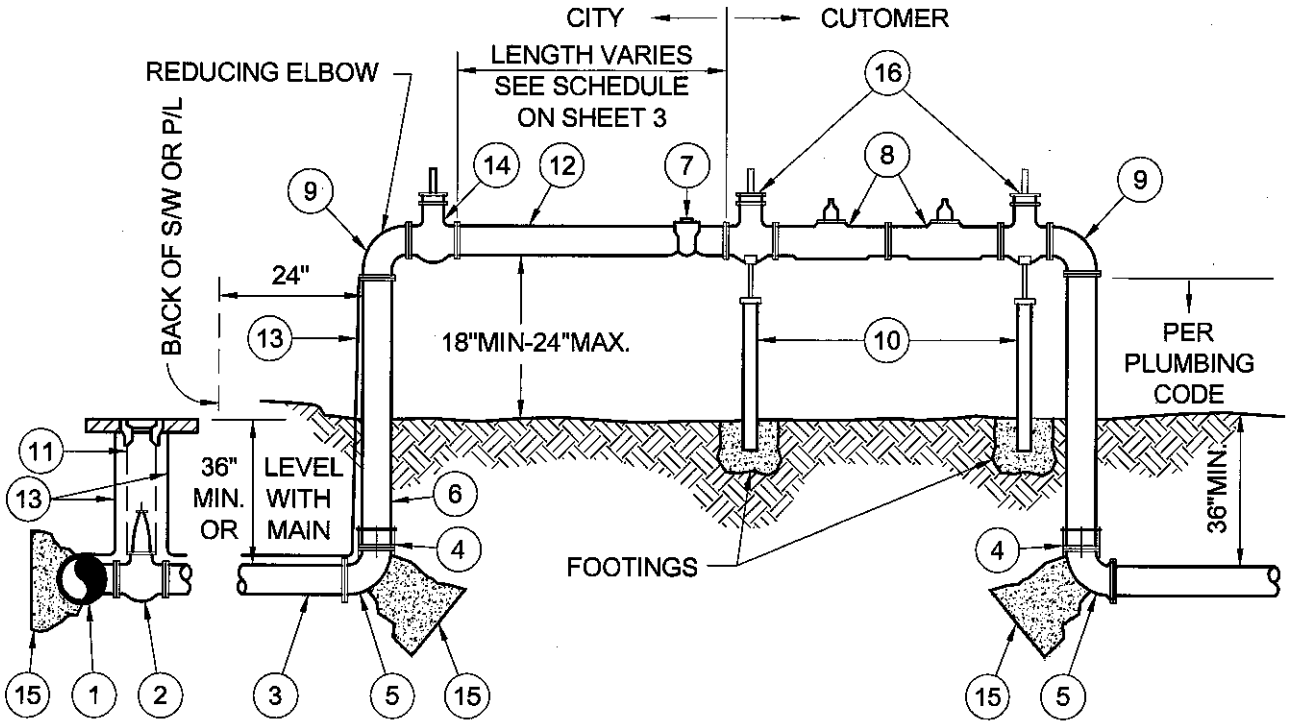

NOTES:

1. SEE CITY STANDARD DETAIL 001 - GENERAL WATER NOTES.
2. 3" AND 4" METER MUST BE INSTALLED WITH A 6" SERVICE AND A REDUCED ELBOW AS SHOWN OR A 6" ELBOW AND A REDUCER.
3. DOUBLE RUBBER GASKETS REQUIRED AT METER FLANGES.
4. ABOVE GROUND ASSEMBLY SHALL BE PAINTED BY CONTRACTOR WITH ONE COAT PRIMER, TWO COATS HUNTER GREEN ENAMEL.

LEGEND

1. TAPPING SLEEVE BY CITY.
2. 6" GATE VALVE (RW).
3. 6" DUCTILE IRON OR DR 14 PVC PIPE. PIPELINE PROTECTIVE COATING PER DETAIL 001.
4. MJ RETAINER GLANDS SHALL BE MEGALUG.
5. DUCTILE IRON 90° MJ x MJ.
6. SPOOL (6" DUCTILE IRON FLANGE BY PLAIN END).
7. METER TO BE FURNISHED BY CITY.
8. BACKFLOW DEVICE PER COUNTY OF VENTURA ENVIRONMENTAL HEALTH STDS.
9. 90° FLANGE x FLANGE.
10. PIPE SUPPORTS PER CITY STANDARD DETAIL 021.
11. VALVE BOX PER CITY STANDARD DETAIL 004.
12. THREADED FLANGE SPOOL BY CITY FORCES.
13. LOCATING WIRE FOR PVC PIPE.
14. GATE VALVE (RW) WITH STANDARD AWWA OPERATOR NUT.
15. THRUST BLOCKS PER CITY STANDARD DETAIL 006.
16. IF REQUIRED BY FIRE DEPT., INSTALL O.S. AND Y VALVES PER CALIFORNIA FIRE CODE.

CITY OF SAN BUENAVENTURA	PUBLIC WORKS DEPARTMENT ENGINEERING DIVISION	
3" AND LARGER METER AND BACKFLOW ASSEMBLY INSTALLATION		STD. DET. NO. 010
APPROVED BY: WATER GENERAL MANAGER	APPROVED BY CITY ENGINEER R.C.E. 37064 DATE 7-7-16	SHEET 2 of 3

LAYING LENGTH SCHEDULE

(12)	SPOOL:	3"	12"
	"	4"	18"
	"	6"	18"

(7)	METER	3"	19"
	"	4"	23"
	"	6"	27"

CITY OF SAN BUENAVENTURA

PUBLIC WORKS DEPARTMENT
ENGINEERING DIVISION

METER AND BACKFLOW ASSEMBLY INSTALLATION NOTES

STD. DET. NO.
010

APPROVED BY: WATER GENERAL MANAGER

APPROVED BY: CITY ENGINEER R.C.E. 37064

DATE 7-7-16

SHEET 3 of 3

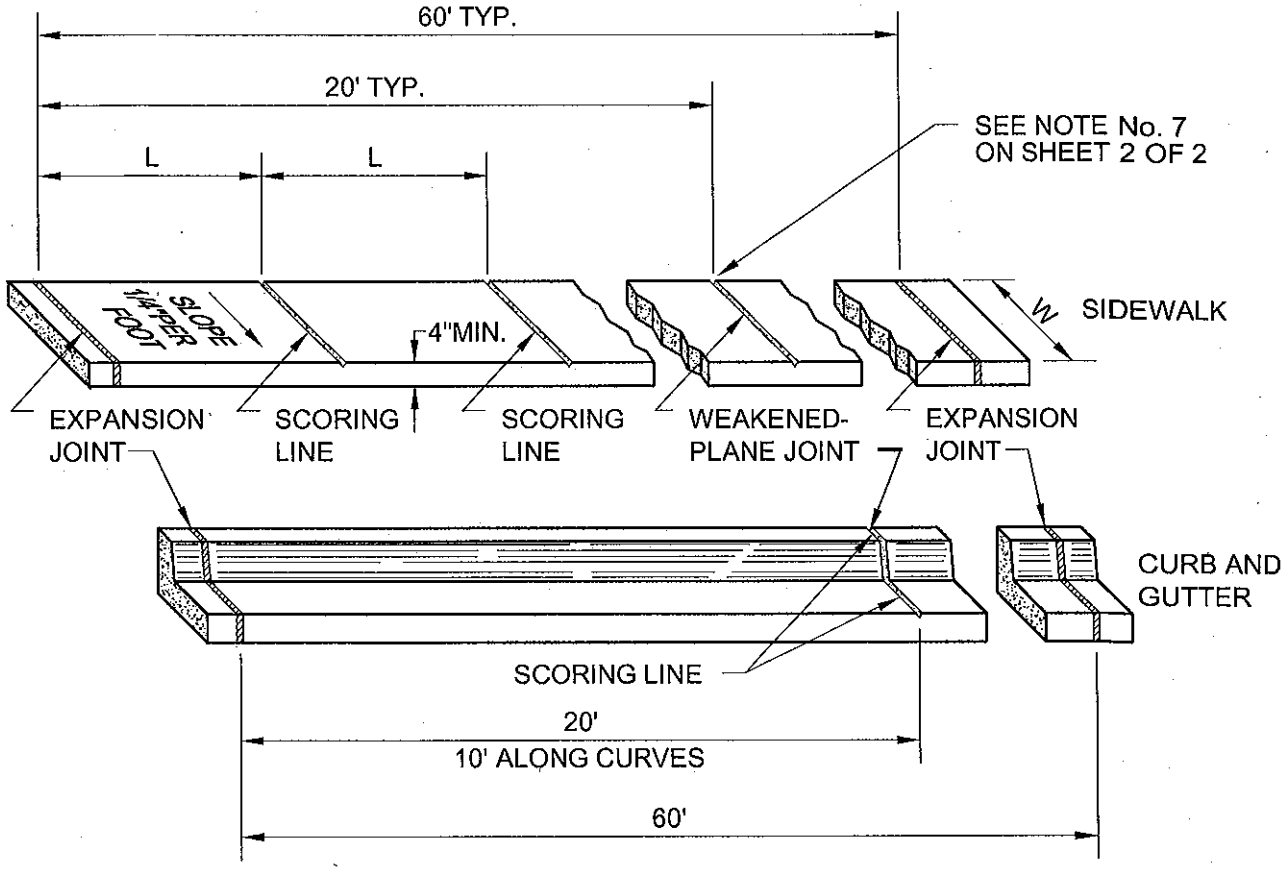

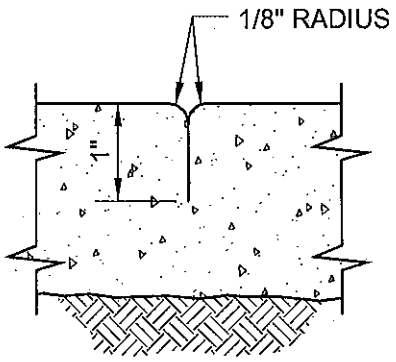

WEAKENED-PLANE JOINT

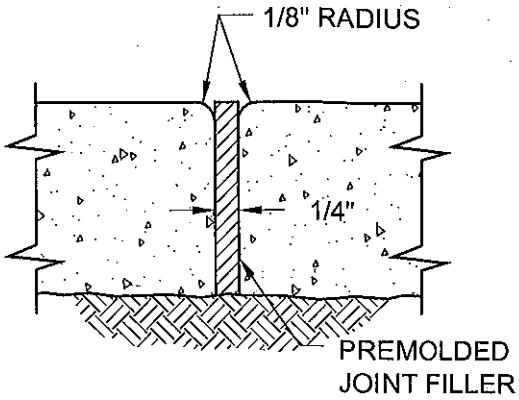

EXPANSION JOINT

CITY OF SAN BUENAVENTURA	PUBLIC WORKS DEPARTMENT ENGINEERING DIVISION	
SIDEWALK DETAILS		STD. DET. NO. 102
APPROVED BY: J. McDermott PRINCIPAL CIVIL ENGINEER	APPROVED BY RLR CITY ENGINEER R.C.E. 37064 DATE 2-25-14	SHEET 1 of 2

SCORE LINE SCHEDULE

W	L
4'	4'
5'	5'
6'	5'
8'	4'
10'	5'

IF "W" EXCEEDS 6', ADD ADDITIONAL SCORE LINE AT 1/2 W.

NOTES

1. ALL WORK SHALL BE DONE IN ACCORDANCE WITH STANDARD SPECIFICATIONS FOR PUBLIC WORKS CONSTRUCTION EXCEPT AS OTHERWISE NOTED.
2. EXPANSION JOINTS, 1/4 INCH THICK, SHALL BE PLACED AT THE B.C. AND E.C. OF ALL RETURNS, AT THE OUTER EDGES OF DRIVEWAYS INCLUDING "X" DISTANCES, AND AT UNIFORM INTERVALS AS SHOWN FOR ALL CONCRETE FLAT WORK.
3. WEAKENED PLANE JOINTS SHALL BE CONSTRUCTED AT EQUAL SPACING BETWEEN EXPANSION JOINTS IN WALKS AND GUTTERS.
4. SCORING LINES, 1/4 INCH DEEP, SHALL BE CONSTRUCTED IN CURBS AT LOCATIONS OF WEAKENED PLANE JOINTS IN THE GUTTER AND IN THE WALK AS SHOWN.
5. JOINTS IN THE CURB AND GUTTER SHALL ALIGN WITH CORRESPONDING JOINTS IN THE WALK.
6. LONGITUDINAL SCORING LINES WILL BE REQUIRED IN WALKS WIDER THAN 6 FEET.
7. WEAKENED PLANE JOINTS IN SIDEWALK SHALL BE CONSTRUCTED WITH T-SHAPED PLASTIC ZIPPER STRIPS. JOINT SHALL BE TOOLED.
8. SIDEWALK SHALL BE PLACED ON 4" OF FILL WITH SAND EQUIVALENT 20 OR HIGHER COMPACTED TO 90% MINIMUM.
9. FOR THE INSTALLATION OF ABOVE AND BELOW GROUND UTILITIES IN NEW OR EXISTING SIDEWALKS, THE SIDEWALK SHALL BE CONSTRUCTED FULL WIDTH AND TO THE NEAREST COLD JOINT OR PERPENDICULAR SCORE MARK.
10. REPAIR ANY DAMAGED EXISTING SIDEWALK ADJACENT TO NEW SIDEWALK.

* CURB FACE, 6" UNLESS OTHERWISE NOTED ON THE PLANS.

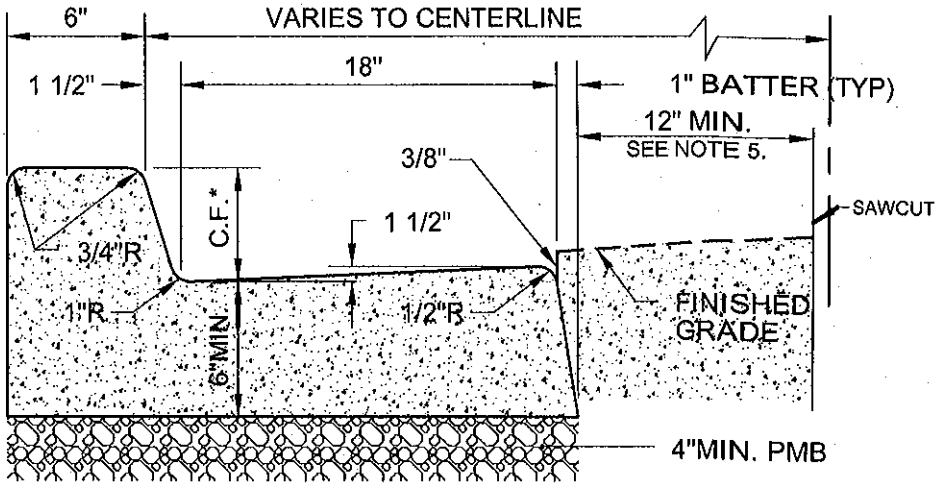

TYPE "A" CURB AND GUTTER

ALL CURB AND GUTTER SHALL BE TYPE "A" UNLESS OTHERWISE APPROVED BY THE CITY ENGINEER.

* CURB FACE, 8" UNLESS OTHERWISE NOTED ON THE PLANS.

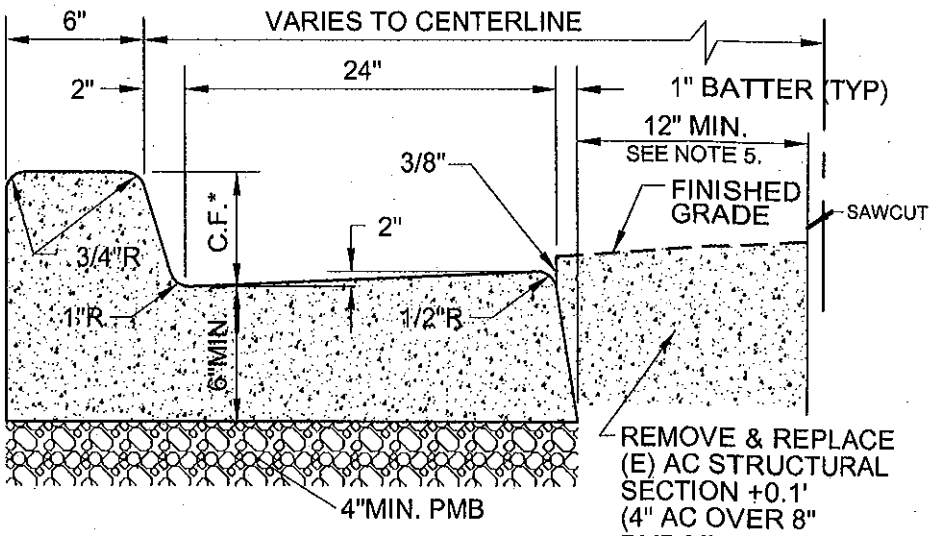

TYPE "B" CURB AND GUTTER

NOTES:

1. ALL WORK SHALL BE DONE IN ACCORDANCE WITH THE "STANDARD SPECIFICATIONS FOR PUBLIC WORKS CONSTRUCTION".
2. 4" MINIMUM PMB SHALL BE PLACED UNDER CURB AND GUTTER OR CURB. COMPACT TO 95% RELATIVE DENSITY.
3. THE FACE AND TOP OF THE CURB SHALL BE TROWELLED THEN FINISHED WITH A FINE HAIR BROOM. THE GUTTER SHALL BE TROWELLED SMOOTH ON 4 INCHES NEXT TO THE CURB.
4. CONCRETE SHALL BE 520-C-2500.
5. A MINIMUM OF 12" WIDE AC PAVEMENT REPAIR PATCH IS REQUIRED WHEN CURB AND GUTTER IS PLACED ADJACENT TO EXISTING AC PAVEMENT.

CITY OF SAN BUENAVENTURA	PUBLIC WORKS DEPARTMENT ENGINEERING DIVISION	
CURB & GUTTER		STD. DET. NO. 107
APPROVED BY: J. McDermott PRINCIPAL CIVIL ENGINEER	APPROVED BY R.C.E. CITY ENGINEER R.C.E. 37064 DATE 2-25-14	SHEET 1 of 2

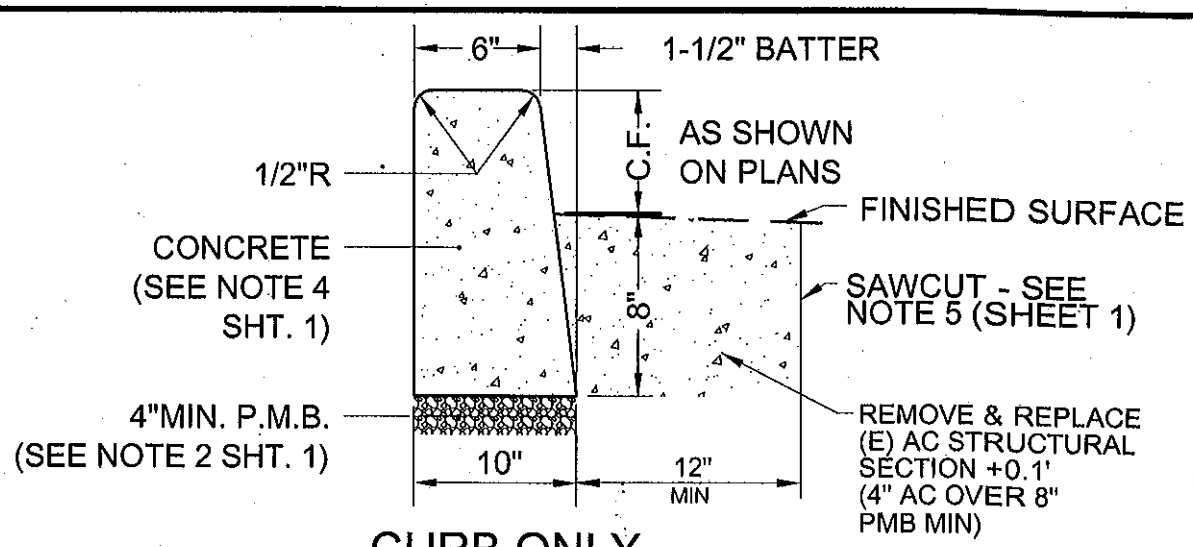

CURB ONLY

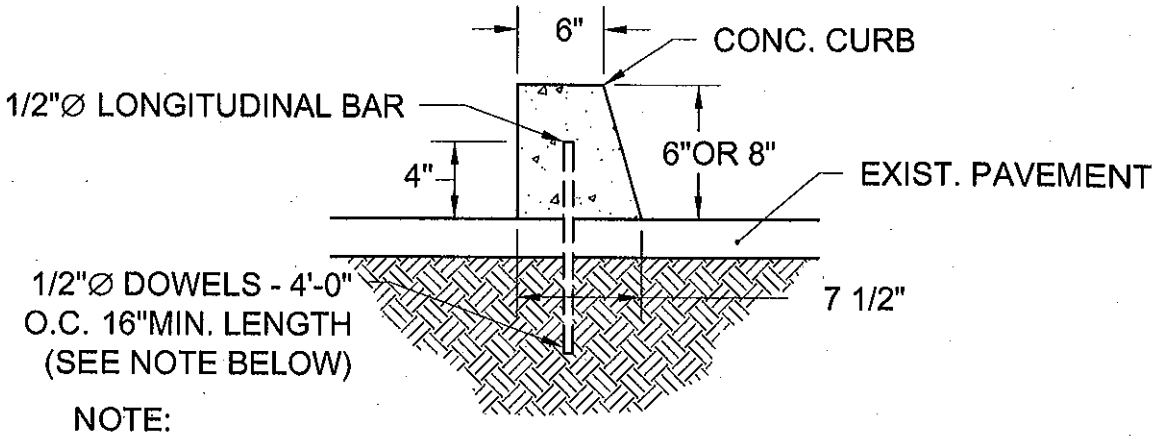

NOTE:

1. EXPANSION JOINTS PER CITY STANDARD PLAN 102.
2. WHERE APPROVED BY THE CITY ENGINEER, EPOXY RESIN MAY BE USED IN LIEU OF DOWELING.

SUPERPOSED CONCRETE CURB

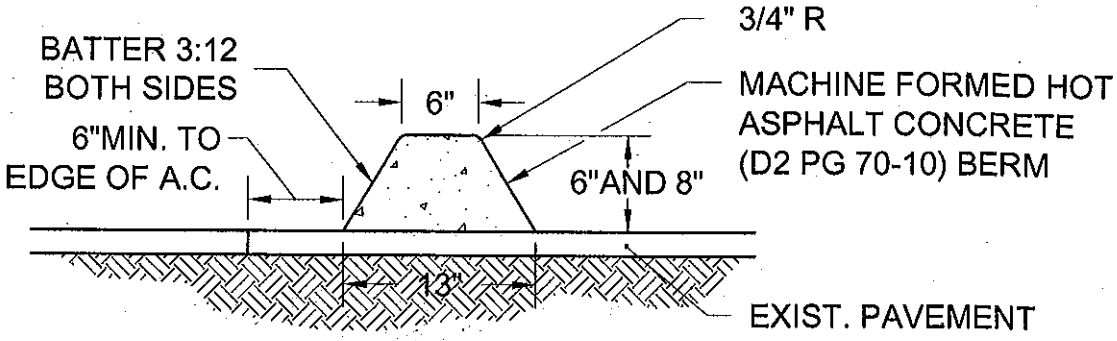

ASPHALT CONCRETE BERM

CITY OF SAN BUENAVENTURA	PUBLIC WORKS DEPARTMENT ENGINEERING DIVISION	
CURB & GUTTER		STD. DET. NO. 107
APPROVED BY: J. McDERMOTT PRINCIPAL CIVIL ENGINEER	APPROVED BY CITY ENGINEER R.C.E. 37064 DATE 2-25-14	SHEET 2 of 2

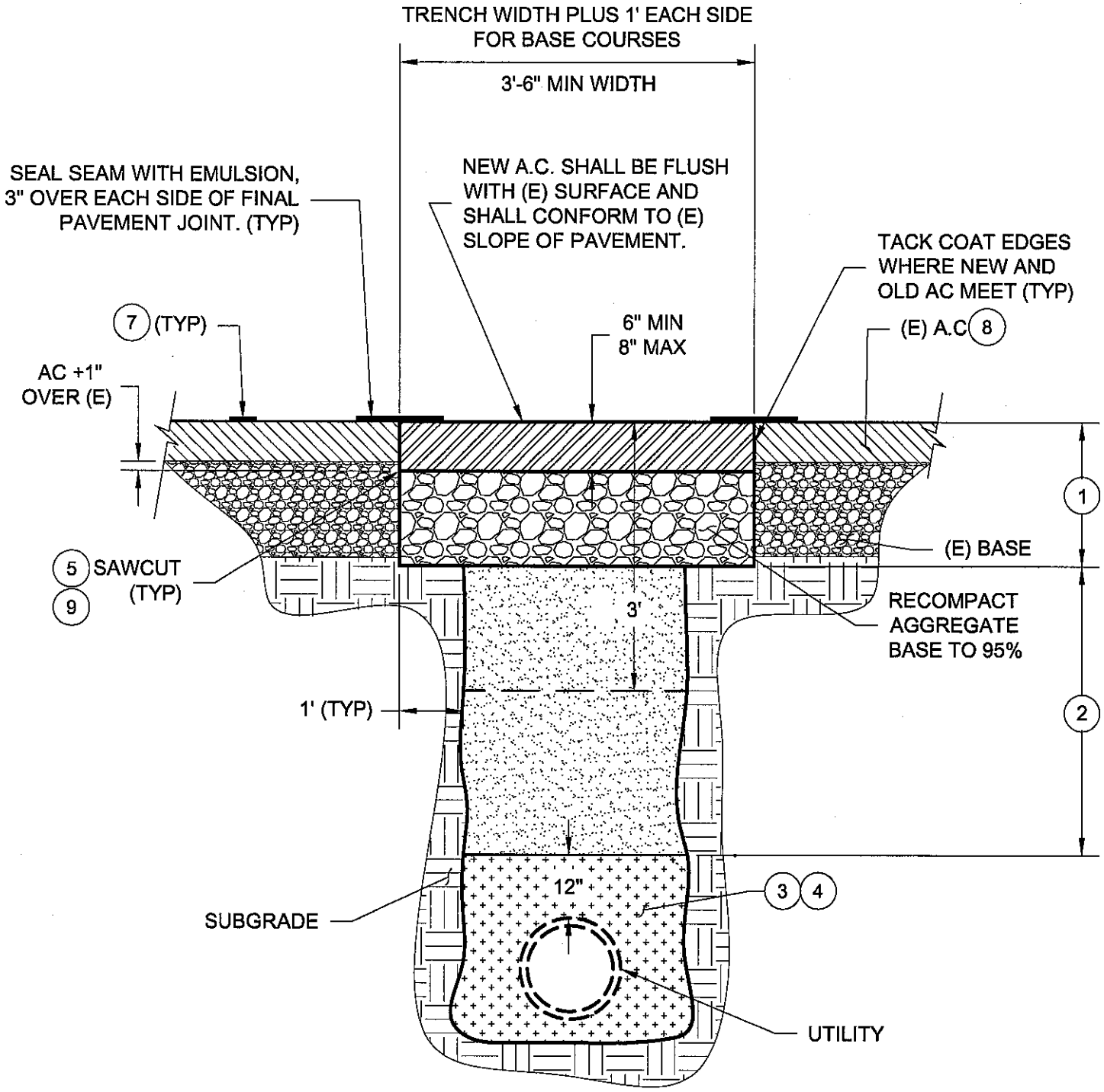

NOTES:

1. TRENCH BACKFILL REPAIR TYPE IS DEPENDENT ON MORATORIUM CONDITIONS AND APPLIES TO BOTH SIDES OF THE TRENCH.
2. A MORATORIUM STREET IS ONE THAT HAS RECEIVED A NEW ASPHALT OVERLAY WITHIN THE LAST 5 YEARS OR ANEW SLURRY OR CAPE SEAL WITHIN THE LAST 2 YEARS
3. SEE SHEETS 3 AND 4 FOR CONSTRUCTION NOTES
4. CONTRACTOR SHALL MAKE AN EFFORT TO PERFORM WORK SO THAT THE MAJORITY OF CONSTRUCTION ACTIVITY IS ON THE SIDE OF TRENCH THAT REQUIRES THE MOST RESURFACING

CITY OF SAN BUENAVENTURA	PUBLIC WORKS DEPARTMENT ENGINEERING DIVISION	
TRENCH BACKFILL / AC REPAIR ON NON MORATORIUM STREETS		STD. DET. NO. 112
APPROVED BY: PRINCIPAL CIVIL ENGINEER	APPROVED BY CITY ENGINEER R.C.E. 80986 DATE 1/5/2017	SHEET 1 of 5

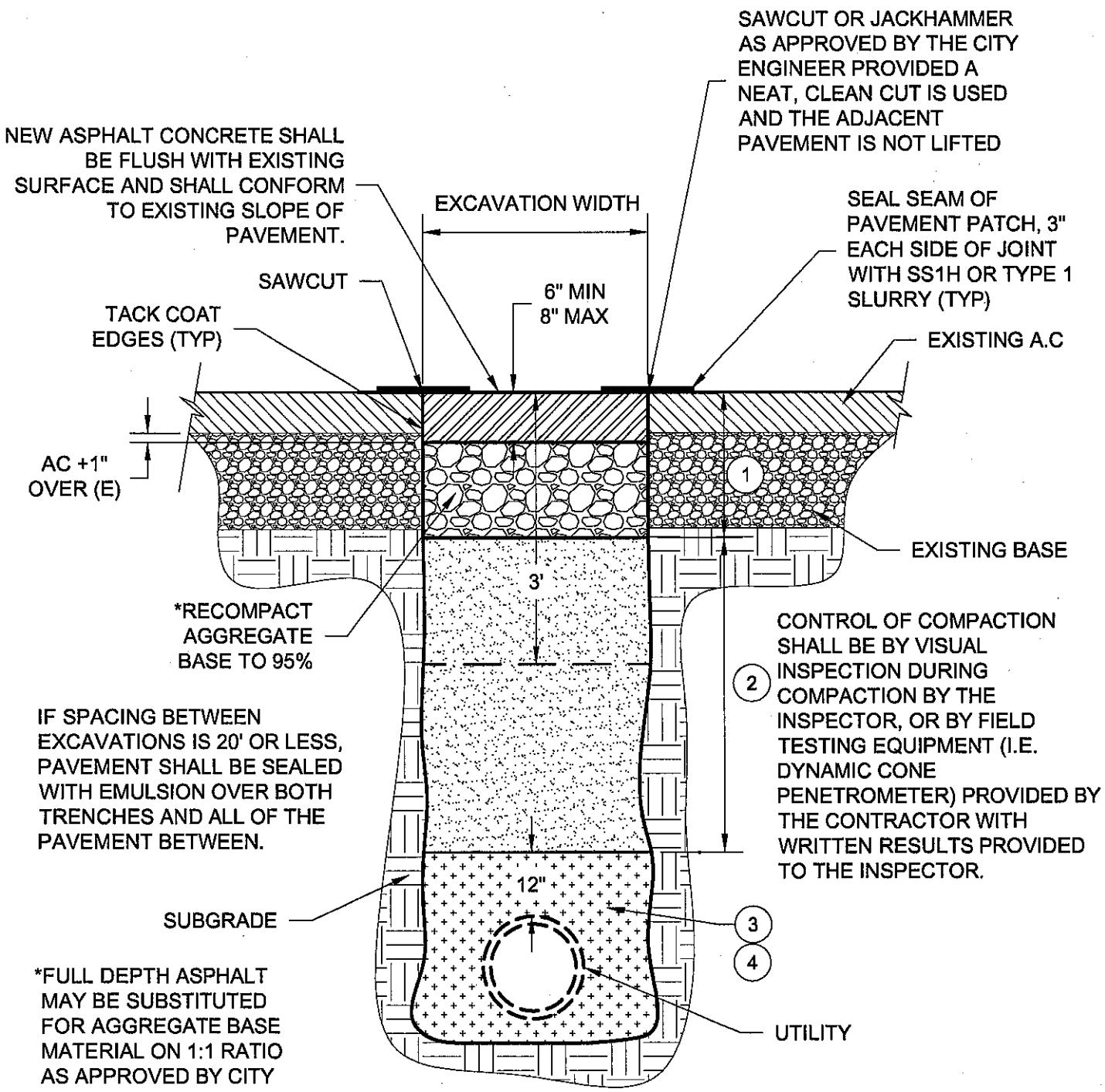

BACKFILL ONLY FOR SMALL RECTANGULAR EXCAVATIONS NO LARGER THAN 32 S.F.

NOTE: SEE SHEET NUMBER 4 AND 5 FOR NOTES

CITY OF SAN BUENAVENTURA	PUBLIC WORKS DEPARTMENT ENGINEERING DIVISION	
POTHOLE/UTILITY CUT REPAIR BACKFILL ON NON MORATORIUM STREETS (LESS THAN 32 SQUARE-FEET ONLY)		STD. DET. NO. 112
APPROVED BY: PRINCIPAL CIVIL ENGINEER	APPROVED BY CITY ENGINEER R.C.E. 80986 DATE 1/5/2017	SHEET 2 of 5

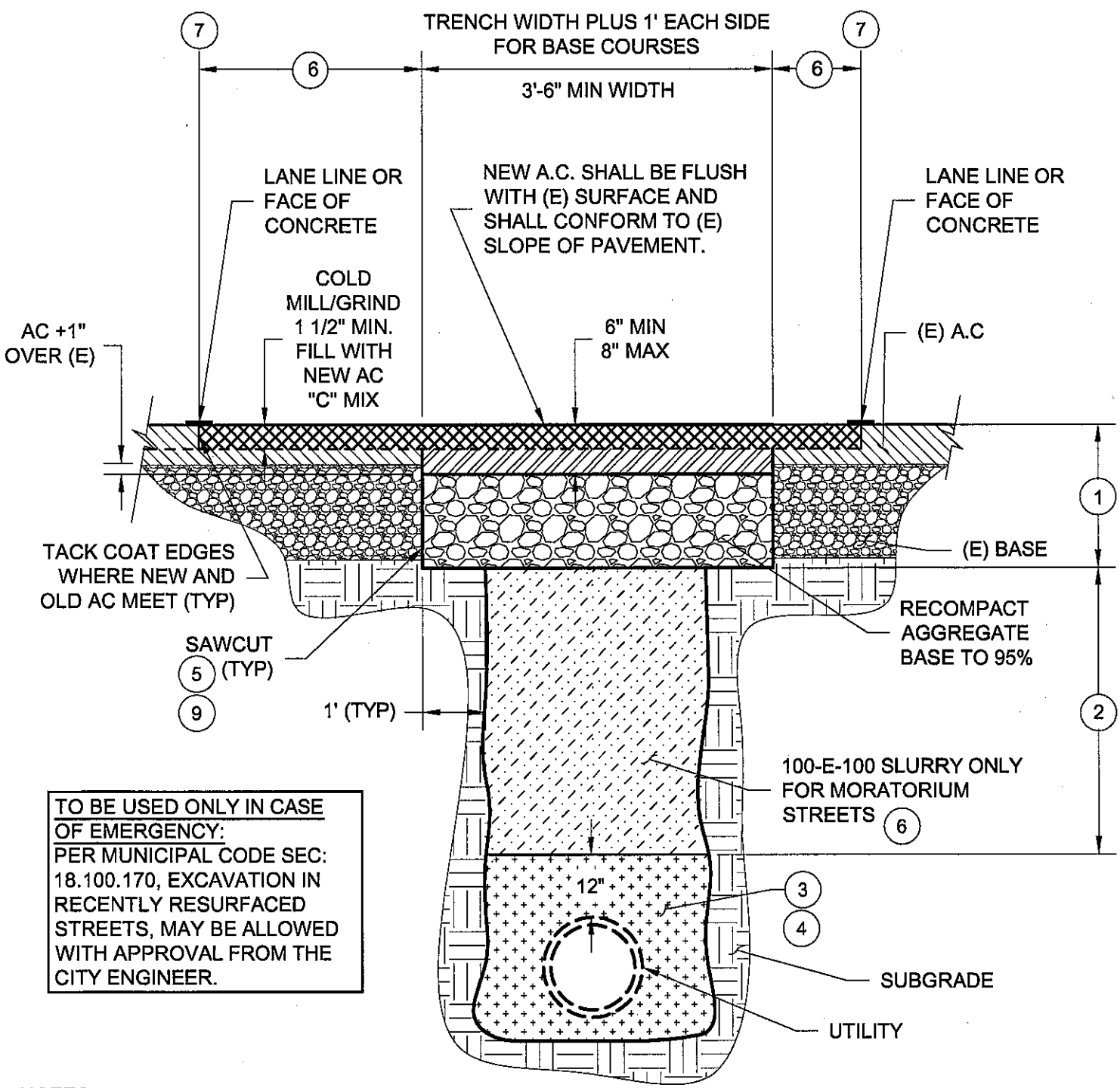

TO BE USED ONLY IN CASE OF EMERGENCY:
PER MUNICIPAL CODE SEC: 18.100.170, EXCAVATION IN RECENTLY RESURFACED STREETS, MAY BE ALLOWED WITH APPROVAL FROM THE CITY ENGINEER.

NOTES:

1. TRENCH BACKFILL REPAIR TYPE IS DEPENDENT ON MORATORIUM CONDITIONS AND APPLIES TO BOTH SIDES OF THE TRENCH.
2. A MORATORIUM STREET IS ONE THAT HAS RECEIVED A NEW ASPHALT OVERLAY WITHIN THE LAST 5 YEARS OR ANEW SLURRY OR CAPE SEAL WITHIN THE LAST 2 YEARS
3. SEE SHEETS 3 AND 4 FOR CONSTRUCTION NOTES
4. CONTRACTOR SHALL MAKE AN EFFORT TO PERFORM WORK SO THAT THE MAJORITY OF CONSTRUCTION ACTIVITY IS ON THE SIDE OF TRENCH THAT REQUIRES THE MOST RESURFACING

CITY OF SAN BUENAVENTURA	PUBLIC WORKS DEPARTMENT ENGINEERING DIVISION	
EMERGENCY TRENCH BACKFILL/ AC REPAIR ALL MORATORIUM STREETS		STD. DET. NO. 112
APPROVED BY: PRINCIPAL CIVIL ENGINEER	APPROVED BY CITY ENGINEER R.C.E. 80986 DATE 1/5/2017	SHEET 3 of 5

CONSTRUCTION NOTES

LEGEND

1. REFER TO SPECIFICATIONS FOR PAVEMENT STRUCTURAL SECTION.
2. BACKFILL - IMPORT, COMPACTED TO 90% RELATIVE DENSITY. OR 100-E-100 SLURRY AS APPROVED BY THE CITY ENGINEER. COMPACTION TEST REPORT FROM A CERTIFIED SOIL LAB MUST BE PROVIDED TO CITY INSPECTOR PRIOR TO AC OR PCC PAVING.
3. PIPE ZONE - IMPORT CLEAN SAND WITH SAND EQUIVALENT OF 20 OR GREATER. COMPACT TO 90% RELATIVE DENSITY. SEE STANDARD DETAIL 113 FOR UTILITY OR STRUCTURE.
4. IF SAND EQUIVALENT IS 20 OR GREATER, JETTING MAY BE USED IN PIPE ZONE ONLY WHEN APPROVED BY THE CITY ENGINEER.
5. STREET SHALL BE SAWCUT. IF SAWCUT IS DAMAGED AFTER UTILITY IS INSTALLED AND BACKFILL IS COMPLETE, THE STREET SHALL BE RE-SAWCUT SO THAT A CLEAN EDGE REMAINS FOR PAVING. SAWCUT A MINIMUM OF 1/2 PAVEMENT THICKNESS. FOR P.C.C. OVERLAYED BY ASPHALT, SAWCUT THICKNESS OF P.C.C. PLUS A.C. THICKNESS. ALL ASPHALTIC CONCRETE JOINTS SHALL BE SEALED WITH ASPHALTIC EMULSION, 6" MINIMUM EITHER SIDE BEFORE AND AFTER PAVEMENT IS PLACED. JOINTS OF NEW ASPHALTIC CONCRETE SHALL BE FLUSH WITH THE EXISTING PAVEMENT.
6. RECENTLY RESURFACED/MORATORIUM STREETS: FOR PERPENDICULAR TRENCHES, SEAL PAVEMENT WITH SLURRY SEAL CONSISTING OF MIX DESIGN APPROVED BY CITY ENGINEER, OVER ENTIRE TRENCH WIDTH PLUS AN ADDITIONAL 6' ON EITHER SIDE OF TRENCH CENTERLINE. FOR LONGITUDINAL TRENCHES,MILL AND FILL ENTIRE AREA ADJACENT TO TRENCH AND EXTEND TO NEXT LANE LINE OR CURB/GUTTER AS APPLICABLE (REPAIR ENTIRE LANES THAT ARE IMPACTED BY TRENCH CUT) UNLESS OTHERWISE APPROVED BY THE CITY ENGINEER. PAVEMENT SHALL BE CONTINUOUS WITH JOINTS ONLY WHERE NEW AND EXISTING ASPHALT/CONCRETE JOIN.
7. THE CONTRACTOR SHALL REPLACE TRAFFIC STRIPING, STREET MARKINGS, AND CURB MARKINGS REMOVED OR DAMAGED BY THE WORK WITH LIKE KIND MATERIALS TO MATCH EXISTING STRIPING.
8. FOR MULTIPLE TRENCH REPAIR LOCATIONS ADJACENT TO EACH OTHER, DISTANCE BETWEEN REPAIRS SHALL BE NO LESS THAN 4' OTHERWISE AREA BETWEEN TRENCHES SHALL BE A PART OF THE REPAIR. FOR MULTIPLE LOCATIONS LESS THAN 32 SQ FT IN SIZE. THE PAVEMENT SHALL BE SEALED WITH A TYPE II SLURRY SEAL TO INCLUDE THE FULL WIDTH (+1') AND LENGTH (+1') OF ALL TRENCH CUTS.
9. TRENCH REPAIR MUST BE UNIFORM AND SQUARE. ZIG ZAG TRENCHES ARE NOT ALLOWED.

NOTE:
TRENCH BACKFILL DETAILS ARE APPLICABLE FOR ALL UNDERGROUND UTILITY INSTALLATIONS INCLUDING, WITHOUT LIMITATION; TELECOMMUNICATIONS (CABLE, T.V., PHONE, ETC.), GAS, ELECTRIC, AND ALL UTILITIES INSTALLING CONDUITS WITHIN CITY STREETS WITHOUT A FRANCHISE AGREEMENT WITH THE CITY.

GENERAL NOTES

SPECIFICATIONS:
ALL BACKFILL SHALL BE PLACED AND TESTED IN ACCORDANCE WITH STANDARD SPECIFICATIONS FOR PUBLIC WORKS CONSTRUCTION EXCEPT AS OTHERWISE NOTED HEREON.

MAXIMUM LIFTS*

A. MECHANICAL COMPACTION

LIFT	EQUIPMENT	NOTES
3.00'	HYDROHAMMER	(NOT TO BE USED WITHIN 4' OF ANY PIPE)
1.50'	VIBRATORY	(NOT TO BE USED WITHIN 2' OF ANY PIPE)
1.00'	ROLLING STOCK	WALK BEHIND AND MINI.
.67' = 6"	HAND TAMPER	
.33' = 4"	HAND VIBRATORY PLATE	

B. HYDRAULIC DENSIFICATION

2.00'	JETTING UNDER PRESSURE	(ONLY USED WHEN APPROVED BY CITY ENGINEER)

NOTE: EITHER FILL OR BEDDING MUST BE FREE DRAINING.

*A LIFT IS ONE LAYER OF MATERIAL PLACED, PROCESSED, AND COMPACTED AS A UNIT AT OPTIMUM MOISTURE CONTENT.

CONTROL OF COMPACTION
VISUAL INSPECTION AND SOIL TESTING AS REQUIRED BY THE INSPECTOR. COMPACTION TEST REPORT FROM CERTIFIED SOIL LAB IS REQUIRED FOR ALL WORK COMPLETED WITHOUT CITY INSPECTOR VISUAL PRIOR TO AC OR PCC RESURFACING

ROCK IN BACKFILL
SUFFICIENT SAND AND FINES MUST BE MIXED INTO THE BACKFILL TO FILL VOIDS WHEN SOIL CONTAINS ROCKS. MAXIMUM SIZE ROCK IN FILL IS 6 INCHES, BROKEN PCC AND AC IS ALLOWED IN NATIVE BACKFILL ONLY, WITH 6 INCH MAXIMUM SIZE.

LABORATORY MAXIMUM DENSITY

METHOD 1: LABORATORY MAXIMUM DENSITY OF SOIL SHALL BE DETERMINED BY ASTM D1557-91. (COMPACTION EFFORT EQUALS 33,750 FT.-LBS. PER CUBIC FOOT.)

METHOD 2: LABORATORY MAXIMUM DENSITY OF BASE AND SUB-BASE MATERIALS SHALL BE DETERMINED BY TEST METHOD NO. CALIF. 216, METHOD A.

SAND EQUIVALENT
SAND EQUIVALENT SHALL BE DETERMINED BY TEST METHOD NO. CA. 217.

FIELD DENSITY
FIELD DENSITY OF SOIL SHALL BE DETERMINED BY ASTM D1556-00, USING THE BASE PLATE AND MAKING SUITABLE ADJUSTMENTS FOR VOLUMES OF ROCKS IN THE TEST HOLE, OR BY TEST METHOD NO. CALIF. T-231-B, PARTS A-E AND G FOR NUCLEAR DEVICES.
THE WORDS "RELATIVE COMPACTION" OR "RELATIVE DENSITY" SHALL MEAN THE RATIO OF THE FIELD DENSITY TO THE LABORATORY MAXIMUM DENSITY EXPRESSED IN PERCENT.

CITY OF SAN BUENAVENTURA	PUBLIC WORKS DEPARTMENT ENGINEERING DIVISION	
TRENCH BACKFILL		STD. DET. NO. 112
APPROVED BY: PRINCIPAL CIVIL ENGINEER	APPROVED BY CITY ENGINEER R.C.E. 80986 DATE 1/5/2017	SHEET 5 of 5

APPENDIX E PERMITS

CITY OF VENTURA

COMMUNITY DEVELOPMENT

ACKNOWLEDGMENT OF CONDITIONS

PROJ – 23-0443
CASE NOS. CDP-10-23-0046

Pursuant to the City of San Buenaventura Zoning Regulations, on the 25 day of January 2024, Resolution**, CD-2024-04,** was approved, with the property owner's consent and approval, and subject to 11 conditions necessary to enable the approval findings required by law.

As the applicant(s), or agent with the express written authority to make this acknowledgment on behalf of the applicant(s), I, Ling Liu hereby acknowledge that the applicant(s) have read and are fully aware of all of the above-referenced conditions (all of which conditions are incorporated herein) by this reference, have no objections to any of those conditions, and understand that compliance with all those conditions becomes a legal requirement applicable to the property owner(s) and applicant(s), and all their successors in interest, upon exercise of the rights or privileges conferred by the above-referenced resolution and as a consequence of accepting the benefits conferred by the resolution.

Further, as the applicant(s), or agent with the express written authority to make this acknowledgment on behalf of the applicant(s), I hereby acknowledge that the applicant(s) have reviewed and are fully aware of all dedications of property, fees, or other exactions that are required as conditions of approval of the project and that the 90-day period provided by California State Law to protest the imposition, extent, or amount of any such dedications of property, fees, or other exactions begins as of the date of the execution of this Acknowledgment Of Conditions Form.

The applicant(s) further understand that the above-captioned resolution is an exercise of the City's regulatory power as a charter city of the State of California and neither any resolution conditionally approving the project nor this acknowledgment constitute a contract between the City and any other party, or for the benefit of any other party.

I also acknowledge that the applicant(s) are aware that all conditions shall be complied with fully unless other arrangements have been made in writing with the Community Development Director.

Signature (Owner)	Date
	04-21-26
Signature (Applicant)	Date

NOTICE TO APPLICANT AND OWNER: YOU ARE PERSONALLY RESPONSIBLE FOR ASSURING COMPLIANCE WITH ALL CONDITIONS APPLICABLE TO DESIGN REVIEW COMMITTEE, PLANNING COMMISSION AND CITY COUNCIL APPROVAL. FAILURE TO COMPLY MAY LEAD TO REVOCATION OF PERMITS AND APPROVALS, CRIMINAL PROSECUTION, AND/OR THE CITY'S PURSUIT OF OTHER LEGAL REMEDIES UNDER THE SAN BUENAVENTURA ORDINANCE CODE.

CITY OF SAN BUENAVENTURA

RESOLUTION NO. CD-2024-04
APPROVING AN ADMINISTRATIVE COASTAL DEVELOPMENT PERMIT LOCATED AT 2269 ALESSANDRO DRIVE

PROJECT NO.: PROJ-23-0443
CASE NO.: CDP-10-23-0046

IT IS HEREBY ORDERED by the Community Development Director of the City of San Buenaventura, as follows:

SECTION 1: An application has been filed by City of Ventura pursuant to the City of San Buenaventura Municipal Code (SBMC), for an Administrative Coastal Development Permit to allow for the installation of an interim fire station located on a portion of a 2.92-acre site in the General Industrial (M-2) zoning district with a land use designation of Existing Urban in the Coastal Zone; commonly identified as Assessor's Parcel Number 076-0-010-115.

SECTION 2: All proceedings having been duly taken as required by law, and upon review of the information provided in the staff report and consideration of the testimony given at the public hearing, as well as other pertinent information, the Community Development Director hereby finds the following:

COASTAL DEVELOPMENT PERMIT FINDINGS

1. *The development does not significantly obstruct public views of the coastline, views from any public road or from a public recreation area as per* SBMC *Section 24.515.070(C)(1).*

   The proposed construction and installation of an interim fire station has no impact to public views of the coastline, views from any public road or from a public recreation area as the site sits 30 feet below South Seaward Avenue.

2. *The development is compatible with the established physical scale and character of the area as per* SBMC *Section 24.515.070(C)(2).*

   The proposed interim fire station consists of a small one-story living quarters building for firefighters and a tall one-story apparatus building for fire engines that will accommodate a use allowed by right in the M-2 zone. Other properties along Alessandro Drive are developed with 2 and 3-story commercial office buildings and a gas station. Therefore, the authorized project is compatible with the established physical scale and character of the area.

3. *The development is in conformance with all applicable provisions of this Municipal Code and the Comprehensive Plan including, specifically, coastal public access and recreation policies per* SBMC *Section 24.515.070(C)(3).*

   The proposed project is consistent with the comprehensive plan because it is located in an area designated as Existing Urban and would not interfere with public access to coastal and recreational areas.

4. *The proposed development is of a kind permitted by the Comprehensive Plan and the zone in the area where the development is to be located per* SBMC *Section 24.515.070(C)(4).*

   The project authorized by the Administrative Coastal Development Permit is consistent with the Zoning Regulations' purpose since all findings required for obtaining an Administrative Coastal Development Permit can be made in this case.

CALIFORNIA ENVIRONMENTAL QUALITY ACT

The proposed project is Categorically Exempt from the California Environmental Quality Act (CEQA) pursuant to Section 15303 (Class 3, New Construction) of the CEQA Guidelines since the project consists of the construction of two commercial/safety service buildings with less than 10,000 square feet of floor area. Further, the project would not trigger any of the exceptions to the exemptions listed under CEQA Guidelines Section 15300.2. Therefore, no further environmental review is required.

SECTION 3: Based on the above findings, Use Permit Case No. **CDP-10-23-0046** as described above, is **HEREBY APPROVED**, subject to the following conditions:

CONDITIONS OF APPROVAL

1. This permit is granted for the land or land use as described in the application and any attachments thereto, and as shown on the plot plan labeled Case No. CDP-10-23-0046, Exhibit "A" dated January 25, 2024, attached hereto and incorporated herein.

2. This approval shall not become effective until or unless the applicable California Coastal Commission appeal period has expired with no appeals being filed. In the event an appeal is filed, the City's approval shall stay pending the outcome of such appeal.

3. No pets would be allowed in the construction area, to avoid and minimize the potential for harassment, injury, and death of wildlife.

4. Construction activities related to this project may only occur between the hours of 8:00 am to 5:00 pm Monday through Saturday. Construction hours may be extended upon the review and approval of a Construction Management Plan by the Community Development Department. In no case shall construction activity take place on Sunday or any legal or City observed holiday. The definition of “construction activity” shall include running or idling of equipment.

5. Any wells and/or water production facilities on the site shall be abandoned or destroyed in a manner satisfactory to the Ventura Water General Manager and the County Resource Management Agency. A Ventura County Well Demolition Permit will be required prior to abandoning any wells.

6. Equipment idling time should be minimized.

7. Dust preventative measures should include:

    a. Site shall be sufficiently watered to prevent excessive amounts of dust. Watering shall occur at least twice daily with complete coverage, preferably in the late morning and after work is done for the day. Reclaimed water should be used if available.
    b. All exposed soil areas should be treated to prevent fugitive dust. Measures may include, watering, application of environmentally safe soil stabilization materials and/or roll-compaction as appropriate.
    c. All clearing and work shall cease during period of high winds (i.e., greater than 20 mph averaged over one hour).
    d. All material transported off site shall be either be sufficiently watered or securely covered to prevent excessive amounts of dust.
    e. Respiratory protection shall be used by all employees in accordance with Occupational Safety and Health Regulations.
    f. Streets must be swept at least once a day, preferably at the end of the day, if visible soil material is carried over to adjacent streets and roads.

8. During installation and construction activities, all leaks, drips and spills shall be cleaned up immediately.

9. All power equipment shall be equipped with exhaust mufflers or other suitable noise reduction devices.

10. The construction contractor shall use methods not involving impact, where possible. Pile drivers, clam shovel drops, hydromills, vibratory rollers and other major sources of vibration should not be used, if feasible.

11. The Community Development Department shall receive a status update from the Public Works Department of CIP Project No. 93114 – Fire Station No. 7 Permanent Facility regarding the status and progress of project implementation.

SECTION 4: This Administrative Coastal Development Permit shall be subject to revocation if the applicants fail to comply with the conditions listed herein at any time. If, at any time, the Community Development Director, and/or Planning Commission determine that there has been, or may be a violation of the findings or conditions of this action, or of the Municipal Code, a public hearing may be held before the Planning Commission and/or Community Development Director to review this Administrative Coastal Development Permit pursuant to Municipal Code Chapter 24.570. At said hearing, the Administrative Hearing Officer and/or Planning Commission may add conditions, may add conditions, or recommend enforcement actions, or revoke the Permit entirely, as necessary to ensure compliance with the Municipal Code, and to provide for the health, safety, and general welfare of the community.

APPROVED this 25th day of January 2024.

Rachel Dimond, AICP
Interim Community Development Director

Exhibits:
Exhibit A – Plans

N

2269 Alessandro Drive

30 60 120 Feet

Vicinity Map for PROJ-23-0443
Case No. CDP-10-23-0046

VENTURA COUNTY
AIR POLLUTION
CONTROL DISTRICT

ALI REZA GHASEMI, PE
Air Pollution Control Officer
4567 Telephone Road, 2nd Floor | Ventura, CA 93003
Phone: 805.303.4005 | Fax: 805.456.7797

DRAFT

Permit to Operate 81438 - 101

Valid: 04/01/2025 to 03/31/2026

THIS PERMIT HAS BEEN ISSUED TO THE FOLLOWING:

COMPANY NAME AND ADDRESS:

City of Ventura
501 Poli Street
Ventura, CA 93002

FACILITY NAME AND ADDRESS:

City of Ventura Fire Station No. 7
2269 Alessandro Drive
Ventura, CA 93001

EQUIPMENT DESCRIPTION:

Permission is hereby granted to operate the equipment listed at the end of this permit in Table A.

1. THIS PERMIT HAS BEEN ISSUED SUBJECT TO THE FOLLOWING PERMITTED EMISSIONS (PURSUANT TO RULE 29.B):

Permitted Emission	Tons/Year	Pounds/Hour
Reactive Organics	0.00	0.02
Nitrogen Oxides	0.05	0.45
Particulate Matter	0.00	0.02
Sulfur Oxides	0.00	0.04
Carbon Monoxide	0.04	0.41

Note: Because of rounding, values in these tables shown as 0.00 are less than 0.005, but greater than zero.

THIS PERMIT HAS BEEN ISSUED SUBJECT TO THE FOLLOWING CONDITIONS:

2. The permittee shall notify the District when the emergency engine has been installed. Please notify the District by emailing notifications@vcapcd.org or call (805) 303 - 3700. The notification shall include the serial number of the engine and the Facility ID number. Since this stationary source meets the definition of a "small source" (District Rule 11.11), this permit is both an Authority to Construct and a Permit to Operate for a new diesel-fired emergency standby engine.
3. Annual hours of operation for maintenance and testing of each emergency engine shall not exceed **30 hours per year**. This limit does not include emergency operation when electrical line service has failed. When not being operated for maintenance or testing, the emergency engine shall only be used

during a failure or loss of all or part of normal electrical power service to the facility. This condition is applied pursuant to the California ARB Airborne Toxic Control Measure (ATCM) for Stationary Compression Ignition Engines.

In order to comply with this condition, the engine shall be equipped with a non-resettable hour meter and the permittee shall maintain a log that differentiates operation during maintenance and testing from emergency operation. These records shall be compiled into a monthly total. The monthly operating hour records shall be summed for the previous 12 months. Total operating hours for any of these 12 month periods, excluding emergency operation, in excess of the specified annual limit shall be considered a violation of this condition.

4. The emergency diesel engine(s) shall be operated in compliance with all applicable requirements of the California ARB Airborne Toxic Control Measure (ATCM) for Stationary Compression Ignition Engines, Section 93115 through 93115.15, Title 17, California Code of Regulations. This includes, but is not limited to, the following permit conditions.

5. Pursuant to Section 93115.5(b) of the ATCM for Stationary Compression Ignition Engines, effective January 1, 2006, no owner or operator of an in-use emergency standby stationary diesel-fueled engine shall add to the engine or any fuel tank directly attached to the engine any fuel unless the fuel is CARB diesel fuel or another fuel that meets the requirements of Section 93115.5(b) of the ATCM.

6. Pursuant to Rule 74.9.D.3, an emergency engine is exempt from Rule 74.9, "Stationary Internal Combustion Engines", provided that it is operated during either an emergency or maintenance operation. Maintenance operation is limited to 50 hours per calendar year and is defined as "the use of an emergency standby engine and fuel system during testing, repair, and routine maintenance to verify its readiness for emergency standby use".

7. A log of engine operation for each emergency engine shall be maintained based on readings from a non-resettable hour meter. The logs shall differentiate operation during maintenance and testing from operation during an emergency. The hours of operation shall be totaled on a monthly basis and shall be summed for the previous 12 months.

   This data shall be maintained for a minimum of three (3) years from the date of each entry and shall be made available to the APCD upon request.

THE FOLLOWING GENERAL CONDITIONS APPLY TO ALL PERMITTED FACILITIES:

G1. **PERMIT ON PREMISES:** The owner or operator shall maintain a legible copy of this permit on the premises of the subject equipment readily accessible to inspection personnel from the Air Pollution Control District. (Rule 19)

G2. **PERMIT ACCEPTANCE:** Permit acceptance is deemed acceptance of all conditions specified herein and acceptance of the District Rules and Regulations. Within thirty (30) days after receipt of this permit, the permittee may petition the Hearing Board in writing for a public hearing to review any new and/or modified condition(s). (Rule 22)

G3. **OPERATION CHANGES:** An application for an Authority to Construct or Permit to Operate must be submitted prior to the addition, modification, relocation, or replacement of any equipment, contrivance, or process, the use of which may cause, eliminate, reduce, or control the issuance of air contaminants; or the operation outside established permit limits or conditions. (Rule 10)

G4. **TRANSFERABILITY:** This permit is not transferrable from one location to another unless the equipment is specifically listed as being portable. Permits may be transferred from one person (owner) to another only upon submittal of Form App003 (Permit Application Form – Administrative Change). (Rule 20)

G5. **UPSET/BREAKDOWN:** The permittee shall notify the Air Pollution Control District as soon as reasonably possible, but no later than four (4) hours after detection of any occurrence which constitutes a breakdown condition that results in a violation of any condition of this permit or any applicable emission limitation or restriction prescribed by District Rules and Regulations, or by state law. (Rule 32)

G6. **NUISANCE:** A person shall not discharge such quantities of air contaminants or other material which cause injury, detriment, nuisance or annoyance to any considerable number of persons, or to the public. (Rule 51)

G7. **RIGHT OF ENTRY:** Representatives of the District, during reasonable hours, and upon identification, for the purpose of enforcing or administering the Rules of the District, any applicable state or federal air pollution rules or regulations, relating to the emission or control of air contaminants, or of any order, regulation or rule prescribed pursuant thereto, may enter every building, premises, or other place of the permitted facility. Representatives of the District shall have access to and be able to copy records that must be kept under conditions of this permit, have access to inspect equipment and operations regulated or required under the permit, and be able to monitor substances or parameters for the purpose of assuring compliance with any applicable federal, state, or District requirement. (Rule 8)

G8. **PERMIT RENEWAL:** The District reserves the right to amend this permit, upon annual renewal, to ensure facility compliance with applicable state and federal emission standards and with District Rules and Regulations. Unless otherwise stated in this permit, the permit shall be

renewed annually with payment of a renewal fee as described in Rule 42.H. The renewal fee due date shall be the permit expiration date or sixty (60) days after the mailing of the notice of the renewal fee due, whichever is later. If the renewal fee is not paid by the due date, the permit will be void and the permittee will be notified by certified mail. Operating without a valid Permit to Operate is a violation of local and state law. The permit will be reinstated upon payment of the renewal fees and the late fees prescribed in Rule 42.H. (Rules 10, 29, 30, and 42.H)

G9. **INFORMATION REQUESTS:** If, within a reasonable amount of time, any permittee refuses to furnish information requested by the District, the District may suspend this Permit to Operate. The permittee will be informed, in writing, of the permit suspension and the reasons for the suspension. (Rule 27)

G10. **SEVERABILITY:** If any permit condition is found invalid, such finding shall not affect the remaining permit conditions. (Rule 6)

G11. **NON-ENDORSEMENT / OTHER REGULATIONS:** The granting of this Permit to Operate shall not be construed as an endorsement by the District and shall not guarantee compliance with the rules of the District. This Permit to Operate shall not be construed to allow any emission unit to operate in violation of any state or federal emission standard or any rule of the District. This permit cannot be considered as permission to violate existing laws, ordinances, regulations or statutes of other government agencies. (Rule 10.B.2.d)

Sincerely,

Ali R. Ghasemi
Air Pollution Control Officer

Attachments:

- Table A - Permit Equipment List(s)

Q:\PRISM\PRISMFileRoom\PermitFiles\81438\Engineering\Permits\ATC-PTO 81438 101 - Draft Permit - 6-3-2025.docx

PERMIT EQUIPMENT LIST - TABLE A

ATC/PTO 81438 101 / FID: 81438 City of Ventura Fire Station No. 7 / SSID: 81438

A PERMITTED EQUIPMENT

1 Caterpillar Diesel-Fired Emergency Standby Engine

Quantity	*Description*
1	480 BHP Caterpillar Diesel-Fired Emergency Standby Engine , Model C9, Serial No. TBD, EPA Family Name SCPXL08.8NZS, Model Year 2025 (APCD Device no: 103555)

Print Form

Notice of Exemption

Appendix E

To: Office of Planning and Research
P.O. Box 3044, Room 113
Sacramento, CA 95812-3044

County Clerk
County of: Ventura
800 S. Victoria Avenue
Ventura, CA 93009

From: (Public Agency): City of Ventura
501 Poli Street, PO Box 99
Ventura, CA 93001
(Address)

Project Title: Interim Fire Station No. 7

Project Applicant: City of Ventura

Project Location - Specific:

On a portion of a 2.92-acre site at 2269 Alessandro Drive

Project Location - City: Ventura Project Location - County: Ventura

Description of Nature, Purpose and Beneficiaries of Project:

The installation of an interim fire station with the goal of reducing the impact of high call volumes and life safety through improved response times. It includes 2,880 square foot living quarters are and a 5,648 square foot apparatus bay attached to the north side of the living quarters.

Name of Public Agency Approving Project: City of Ventura

Name of Person or Agency Carrying Out Project: City of Ventura

Exempt Status: **(check one):**

- ☐ Ministerial (Sec. 21080(b)(1); 15268);
- ☐ Declared Emergency (Sec. 21080(b)(3); 15269(a));
- ☐ Emergency Project (Sec. 21080(b)(4); 15269(b)(c));
- ☒ Categorical Exemption. State type and section number: 15303, New Construction
- ☐ Statutory Exemptions. State code number: _____

Reasons why project is exempt:

The proposed project is Categorically Exempt from the California Environmental Quality Act (CEQA) pursuant to Section 15303 (Class 3, New Construction) of the CEQA Guidelines since the project is for two commercial/safety service buildings not exceeding 10,000 square feet in floor area. Further, the project would not trigger any of the exceptions to the exemptions listed under CEQA Guidelines Section 15300.2. Therefore, no further environmental review is required.

Lead Agency Contact Person: Jared Rosengren Area Code/Telephone/Extension: 805 658 4737

If filed by applicant:

1. Attach certified document of exemption finding.
2. Has a Notice of Exemption been filed by the public agency approving the project? ☐ Yes ☐ No

Signature: Jared Rosengren Date: 2/16/23 Title: Principal Planner

▪ Signed by Lead Agency ☐ Signed by Applicant

Authority cited: Sections 21083 and 21110, Public Resources Code.
Reference: Sections 21108, 21152, and 21152.1, Public Resources Code.

Date Received for filing at OPR: _____

CALIFORNIA Water Boards

GAVIN NEWSOM
GOVERNOR

YANA GARCIA
SECRETARY FOR
ENVIRONMENTAL PROTECTION

Los Angeles Regional Water Quality Control Board

July 16, 2025

Ms. Ling Liu
Civil Engineer
City of Ventura Public Works Department
501 Poli Street
Ventura, CA 93001

NOTICE OF APPLICABILITY OF COVERAGE UNDER GENERAL NATIONAL POLLUTANT DISCHARGE ELIMINATION SYSTEM PERMIT AND WASTE DISCHARGE REQUIREMENTS–CITY OF VENTURA PUBLIC WORKS DEPARTMENT, INTERIM FIRE STATION NO. 7, 2269 ALESSANDRO DRIVE, VENTURA, CA (ORDER NO. R4-2023-0429, NPDES NO. CAG994004, CI-10845)

Dear Ms. Liu:

You submitted a Notice of Intent (NOI) form with laboratory analytical data sheet on June 23, 2025, and subsequently a revised NOI Form on July 11, 2025, for enrollment under the General National Pollutant Discharge Elimination System (NPDES) permit for the above-referenced site. Based on the attached Fact Sheet and other information provided, we have determined that the groundwater discharge from your facility meets the conditions to be regulated under Order No. R4-2023-0429, *General National Pollutant Discharge Elimination System Permit and Waste Discharge Requirements for Discharges of Groundwater from Construction and Project Dewatering to Surface Waters in Coastal Watersheds of Los Angeles and Ventura Counties* (General NPDES Permit), CAG994004, adopted by the California Regional Water Quality Control Board, Los Angeles Region (Los Angeles Water Board) on December 21, 2023. The General NPDES Permit No. CAG 994004, Order No. R4-2023-0429, became effective on March 21, 2024.

Enclosed are your Waste Discharge Requirements, which also serve as your NPDES permit, consisting of Order No. R4-2023-0429 and Monitoring and Reporting Program (MRP) No. CI-10845. The discharge limitations in Part V.A.1. Tables 2, 3, 7, 8, and the Receiving Water Limitations in Part VI.A.4 Tables 34 of Order No. R4-2023-0429 for the specific constituents listed on Tables A.1., A.2., A.3., and A.4 of the Fact Sheet are the applicable limitations. Because the groundwater from the project flows into the Pacific Ocean, the mineral limitations in Attachment B of Order No. R4-2023-0429 are not applicable to your discharge. All other parts of the Order apply, including but not limited to narrative effluent and receiving water limitations. Prior to starting a new discharge, a representative sample of the effluent shall be obtained and analyzed to determine compliance with the discharge limitations. No later than three days prior to initiation of discharge, you must notify Ventura County Public Works via email to: Discharge.alert@ventura.org about the discharge.

The MRP requires you to implement the monitoring program on the effective date of coverage under this permit. All monitoring reports should be sent to the Los Angeles Water Board, electronically by email to losangeles@waterboards.ca.gov. When submitting monitoring or technical reports to the Los Angeles Water Board per these requirements, please include a reference to "Compliance File No. CI-10845 and NPDES No. CAG994004", which will ensure that the reports are directed to the appropriate file and staff. Also, please do not combine other reports with your monitoring reports. Submit each type of report as a separate document.

The Los Angeles Water Board is implementing a paperless office system to reduce paper use, increase efficiency and provide a more effective way for our staff, the public and interested parties to view water quality documents. Therefore, please convert all regulatory documents, submissions, data, and correspondence that you would normally submit to us as hard copies to a searchable Portable Document Format (PDF). Documents that are 10 MB or larger should be transferred to a disk and mailed to the Los Angeles Water Board as listed in Part X.B.5.c. of the attached MRP. Documents that are less than 10 MB should be emailed to losangeles@waterboards.ca.gov. If you need additional information regarding electronic submittal of documents, please visit the Los Angeles Water Board's website listed above and navigate to Paperless Office.

To avoid future annual fees, please submit a written request for termination of your enrollment under the General Permit in a separate letter, when the project has been completed, and the permit is no longer needed.

We are sending a copy of Order No. R4-2023-0429 by email to you and other parties on the mailing list listed below. A paper copy of the Order will be furnished to anyone who requests it, or it can be obtained at our web site address:
http://www.waterboards.ca.gov/losangeles/board_decisions/adopted_orders/.

If you have any questions, please contact Noman Chowdhury at
noman.chowdhury@waterboards.ca.gov.

Sincerely,

_____
for Susana Arredondo
Executive Officer

Enclosures:

Fact Sheet
Monitoring and Reporting Program for No. CI-10845
Order No. R4-2023-0429, General NPDES Permit No. CAG994004

cc:

Environmental Protection Agency, Region 9, Permit Section (WTR-2-3)
State Water Resources Control Board, NPDES-wastewater
U.S. Army Corps of Engineers
U.S. Fish and Wildlife Services, Division of Ecological Services
NOAA, National Marine Fisheries Service
California Department of Fish and Wildlife, Marine Resources, Region 5
Ventura County, Department of Public Works, Environmental Program Division
Ventura County, Department of Public Works, Flood Control Division
Ventura County, Department of Health Services
Jason Kay, Fire Battalion Chief
Ewelina Mutkowska, Rincon Consultants

STATE OF CALIFORNIA
CALIFORNIA REGIONAL WATER QUALITY CONTROL BOARD
LOS ANGELES REGION

320 West 4th Street, Suite 200, Los Angeles, California 90013
Phone (213) 576-6600 Fax (213) 576-6640
Los Angeles Regional Water Quality Control Board
http://www.waterboards.ca.gov/losangeles

GENERAL ORDER NO. R4-2023-0429 (SERIES NO. 029)
NPDES No. CAG994004 (CI-10845)

WASTE DISCHARGE REQUIREMENTS FOR CITY OF VENTURA PUBLIC WORKS DEPARTMENT (INTERIM FIRE STATION NO. 7)

FACT SHEET

FACILITY ADDRESS
2269 Alessandro Drive
Ventura, CA 93001

FACILITY MAILING ADDRESS
501 Poli St.
Ventura, CA 93001

PROJECT DESCRIPTION
The City of Ventura Public Works Department is planning to construct Interim Fire Station No. 7 for Ventura City Fire Department at 2269 Alessandro Drive in Ventura, California. The site location map is shown in Figure 1. During planned construction activities, it is anticipated that groundwater will be encountered, and it will be necessary to pump, treat and discharge the groundwater into the Coastal Watershed of the Pacific Ocean via nearby the City's storm drain system. Prior to discharge, the water collected will be passed through a series of 20,000-gallon frac tanks for flocculation and gravity settling. Water that has settled will be pumped through a sand filter for removal of sediments and reduction of total suspended solids (TSS) into a flow equalization tank. From the equalization tank, water will be pumped into a series of GAC filters for removal of trace metals (nickel, selenium, zinc, and copper) and a final polish (see Figure 2 for treatment schematic). The system will feature a Bypass (Recirculation Line) for water that is high in TSS and/or pH. The system will measure and record discharge flow, pH, and turbidity.

VOLUME AND DESCRIPTION OF DISCHARGE
Up to 43,000 gallons per day of treated groundwater will be discharged to Discharge Point M-001 (Latitude: N 34° 16' 2.0748", Longitude: W 119° 16' 10.7364"). The discharge flows into the Pacific Ocean, a water of the United States.

APPLICABLE EFFLUENT LIMITATIONS

Based on the information provided in the NPDES Application Supplemental Requirements, the Los Angeles Water Board has determined that the discharges from the project site have reasonable potential to cause or contribute to an exceedance of a water quality standard, and thus effluent limitations for the constituents listed in Tables A.1. through A.4, below are applicable to the discharger's project. These effluent limitations are derived from Part V.A.1. Table 2, 3, 7, 8, and the Receiving Water Limitations in Part VI.A.4 Tables 34 of Order No. R4-2023-0429. As appropriate, effluent limitations are expressed as Maximum Daily Effluent Limitation (MDEL) and Average Monthly Effluent Limitation (AMEL). Because the discharge from the project site flows into the Pacific Ocean, the mineral limitations in Attachment B. of Order No. R4- 2023-0429 are not applicable to your discharge. All other parts of the Order apply, including but not limited to narrative effluent and receiving water limitations.

The Discharger is required to comply with these limitations during its enrollment under Order No. R4-2023-0429.

Table A.1. Effluent Limitations (Table 2 and 7)

Constituents	Units	MDEL	AMEL
Total Suspended Solids	mg/L	75	50
Turbidity	NTU	150	50
BOD_5 20°C	mg/L	30	20
Oil and Grease	mg/L	15	10
Settleable Solids	ml/L	0.3	0.1
Sulfides	mg/L	1.0	Not Applicable (NA)
Phenols	mg/L	1.0	NA
Residual Chlorine	mg/L	0.1	NA
Methylene Blue Active Substances (MBAS)	mg/L	0.5	NA
Selenium	µg/L	120	58

Table A.2. Temperature Effluent Limitations Applicable to Discharges (Table 3)

Receiving Water Type	Max. Temp. (°F)	Other Effluent Limitations
Coastal Waters	-	Elevated temperature waste discharges shall not result in increases in the natural water temperature exceeding 4 °F at the shoreline, the surface of any ocean substrate, or the ocean surface beyond 1,000 feet from the discharge. Thermal waste discharges shall not exceed the natural temperature of the receiving water by more than 20 °F. The discharge shall be discharged away from

Receiving Water Type	Max. Temp. (°F)	Other Effluent Limitations
		the shoreline to achieve dispersion through the vertical water column. The discharge shall be discharged a sufficient distance from ASBS to ensure maintenance of natural temperature in ASBS.

Table A.3. Acute Toxicity applicable to Discharges to all Waterbodies (Table 8)

Parameters	Unit	MDEL	AMEL
Acute Toxicity[1,2] **(Survival endpoint)**	Pass or Fail (TST), Percent (%) Effect[3]	Pass or Percent (%) Effect <50	Pass

Table A.4. Saltwater Water Bacteria Limitations Water Contact Recreation (Rec-1) (Table 34) —Geometric Mean (GM), Statistical Threshold Value (STV)

Parameters	Units	30-day GM	Rolling Six-week GM	Single Sample Maximum	STV[4]
Fecal coliform	MPN or CFU/100mL	200		400	
Enterococci[5],[6]	MPN or CFU/100mL		30		110

[1] Acute Toxicity: The null hypothesis (Ho) for the TST statistical approach is Mean effluent discharge response ≤0.80 × Mean control response. A test result that rejects this null hypothesis is reported as “Pass.” Refer to section VIII. of this Order for Compliance Determination; Aquatic Toxicity Testing; Acute Toxicity.

[2] The average monthly effluent limitation (AMEL) is the Median Monthly Effluent Limitation (MMEL) and shall be reported as “Pass” or “Fail.” The maximum daily effluent limitation (MDEL) shall be reported as “Pass” or “Fail” and “% Effect.” If an acute toxicity routine monitoring test results in a “Fail” for the instream waste concentration (IWC), which is 100 percent effluent, the discharger shall complete a maximum of two MMEL compliance tests. The MMEL compliance tests shall be initiated within the same calendar month that the first routine monitoring test was initiated that resulted in the “Fail” at the IWC. If the first MMEL compliance test results in a “Fail” at the IWC, then the second MMEL compliance test is not necessary because the “Fail” results from the first two tests would constitute a violation of the acute toxicity MMEL.

[3] Percent Effect: The relative “Percent Effect” for the effluent is defined and reported as: ((Mean control response - Mean discharge effluent response) ÷ Mean control response)) × 100.

[4] Statistical Threshold Value (STV) is a set value that approximates the 90th percentile of the water quality distribution of a bacterial population.

[5] Enterococci: The bacteria water quality objective for all waters where the salinity is greater than 1 ppt more than 5 percent of the time during the calendar year is: a six-week rolling geometric mean of enterococci not to exceed 30 cfu/100 mL, calculated weekly, with a STV of 110 cfu/100 mL not to be exceeded by more than 10 percent of the samples collected in a calendar month, calculated in a static manner. U.S. EPA Method 1600 or an equivalent method may be used to measure culturable enterococci. CFUs or "colony forming units" are determined by directly counting visible colonies of bacterial growth on the plate or film. MPN, or Most Probable Number, on the other hand, measures growth statistically. One MPN is equal to one CFU.

[6] While these limitations are identified as receiving water limitations in Order No. R4-2023-0429, they are applied as effluent limitations for enrollees because there are no receiving water monitoring requirements for enrollees in the general order.

FREQUENCY OF DISCHARGE

Discharge will occur for approximately 10 days.

FEASIBILITY OF CONSERVATION, REUSE, AND/OR ALTERNATIVE DISPOSAL METHODS OF WASTEWATER

It is not technically feasible to reuse this water for groundwater recharge, surface spreading, percolation, agricultural or urban irrigation, industrial reuse, surface water augmentation, or environmental restoration due to lack of existing infrastructure to convey the pumped groundwater to possible reuse location. Therefore, the groundwater will be discharged to the Pacific Ocean in compliance with the requirements of the attached Order No. R4-2023-0429.

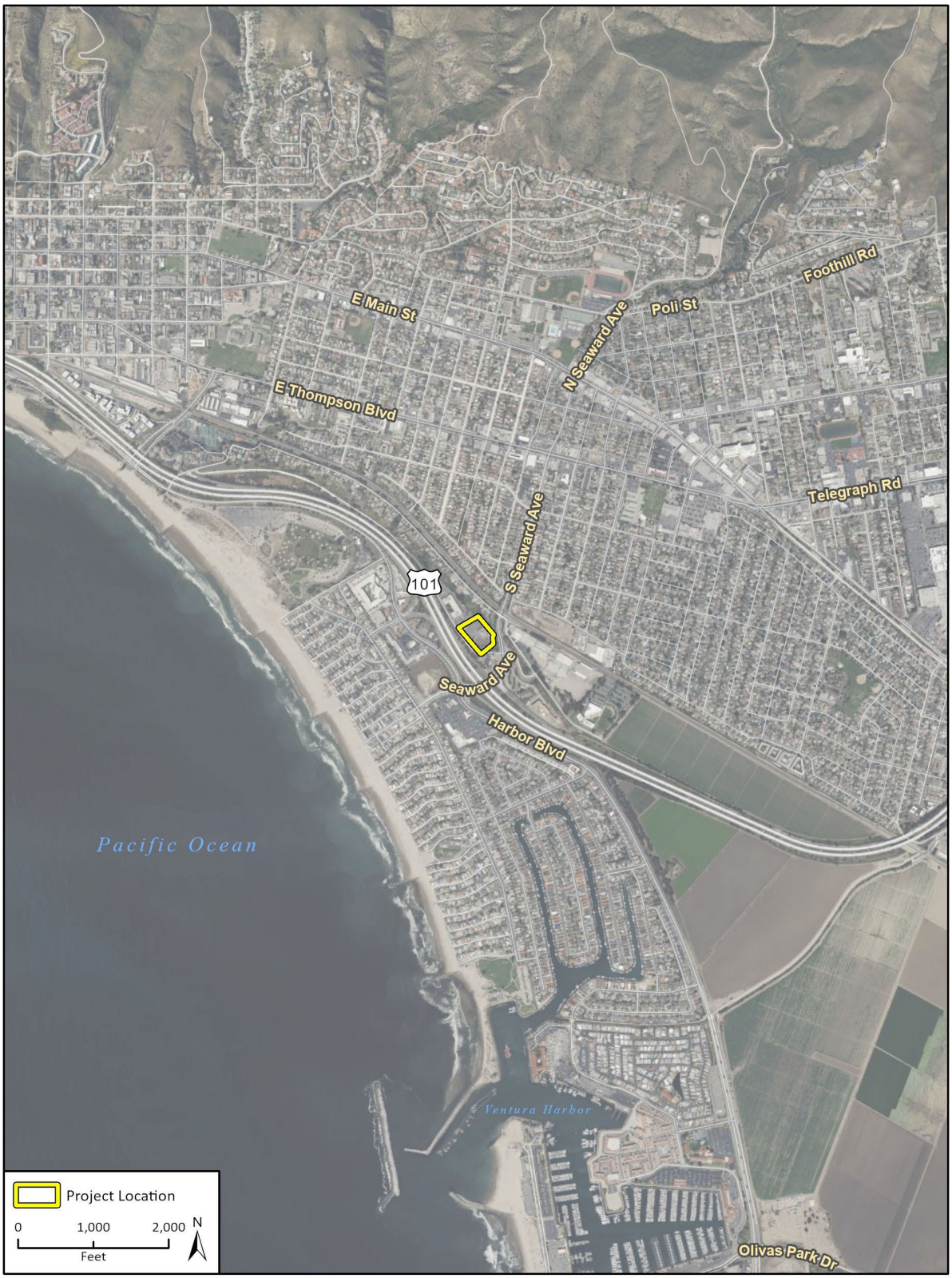

Imagery provided by Microsoft Bing and its licensors © 2025.

25-17709 EE5
Fig X Project Site

Figure 1 – Site Location

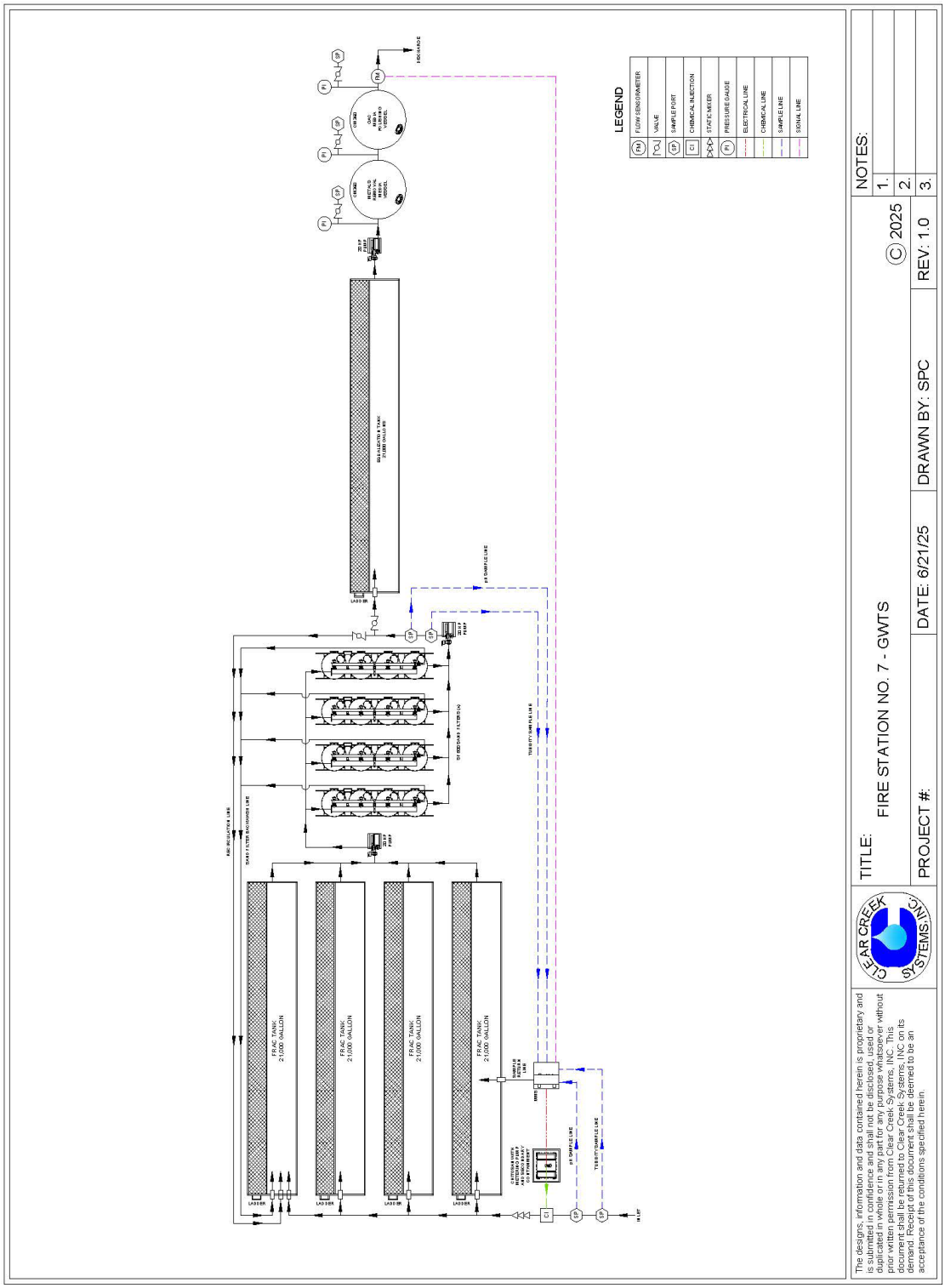

Figure 2 - Treatment Process Schematic Diagram

STATE OF CALIFORNIA
CALIFORNIA REGIONAL WATER QUALITY CONTROL BOARD
LOS ANGELES REGION

MONITORING AND REPORTING PROGRAM NO. CI-10845
FOR
DISCHARGE OF GROUNDWATER FROM CONSTRUCTION AND PROJECT DEWATERING TO SURFACE WATERS
IN
COASTAL WATERSHEDS OF LOS ANGELES AND VENTURA COUNTIES

FOR

CITY OF VENTURA PUBLIC WORKS DEPARTMENT
(INTERIM FIRE STATION NO. 7)

(GENERAL NPDES PERMIT NO. CAG994004, SERIES NO. 029)

This Order was adopted	**December 21, 2023**
Enrollment to this Order shall become effective on:	**July 16, 2025**
This Order shall expire on:	**March 21, 2029**
The United States Environmental Protection Agency (U.S. EPA and the California Regional Water Quality Control Board have classified this discharge as follows:	**Minor**

I, Susana Arredondo, Executive Officer, do hereby certify that this Order with all attachments is a full, true, and correct copy of the Order adopted by the California Regional Water Quality Control Board, Los Angeles Region, on the date indicated above.

_____
for Susana Arredondo, Executive Officer

Date: July 16, 2025

Table of Contents

MONITORING AND REPORTING PROGRAM NO. CI-10845 1
- **I. GENERAL MONITORING PROVISIONS** 3
- **II. MONITORING LOCATIONS** 8
- **III. INFLUENT MONITORING REQUIREMENTS (Not Applicable)** 8
- **IV. EFFLUENT MONITORING REQUIREMENTS** 8
- **V. WHOLE EFFLUENT TOXICITY TESTING REQUIREMENTS** 9
  - **A. ACUTE TOXICITY EFFLUENT MONITORING PROGRAM** 10
  - **B. AMMONIA REMOVAL** 14
  - **C. CHLORINE REMOVAL** 15
  - **D. REPORTING** 15
- **VI. LAND DISCHARGE MONITORING REQUIREMENTS (Not Applicable)** 16
- **VII. RECLAMATION MONITORING REQUIREMENTS (Not Applicable)** 16
- **VIII. RECEIVING WATER MONITORING REQUIREMENTS (Not Applicable)** 16
- **IX. OTHER MONITORING REQUIREMENTS (Not Applicable)** 16
- **X. REPORTING REQUIREMENTS** 16
  - **A. GENERAL MONITORING AND REPORTING REQUIREMENTS** 16
  - **B. SELF-MONITORING REPORTS** 16
  - **C. DISCHARGE MONITORING REPORTS (DMRs) (Not Applicable)** 19
  - **D. OTHER REPORTS (Not Applicable)** 19
  - **E. NOTIFICATION** 19
- **XI. MONITORING FREQUENCIES ADJUSTMENT** 20

MONITORING AND REPORTING PROGRAM (MRP)

40 CFR section 122.48 requires that all NPDES permits specify monitoring and reporting requirements. Section 13383 of the California Water Code (CWC) also authorizes the Los Angeles Water Board to establish monitoring, reporting, and record keeping requirements. This MRP establishes monitoring and reporting requirements which implement the federal and California laws and/or regulations.

I. GENERAL MONITORING PROVISIONS

A. An effluent sampling station shall be established for Discharge Point M-001 and shall be located where representative samples of that effluent can be obtained.

B. This Los Angeles Water Board shall be notified in writing of any change in the sampling stations once established or in the methods for determining the quantities of pollutants in the individual waste streams.

C. Pollutants shall be analyzed using the analytical methods described in 40 CFR section Sections 136.3, 136.4, and 136.5 (revised May 18, 2012); or, where no methods are specified for a given pollutant, by methods approved by this Los Angeles Water Board or the State Water Board. U.S. EPA published regulations for the Sufficiently Sensitive Methods Rule (SSM Rule) which became effective September 18, 2015. For the purposes of the NPDES program, when more than one test procedure is approved under 40 C.F.R. part 136 for the analysis of a pollutant or pollutant parameter, the test procedure must be sufficiently sensitive as defined at 40 C.F.R. 122.21(e)(3) and 122.44(i)(1)(iv). Both 40 C.F.R sections 122.21(e)(3) and 122.44(i)(1)(iv) apply to the selection of a sufficiently sensitive analytical method for the purposes of monitoring and reporting under NPDES permits, including review of permit applications. A U.S. EPA-approved analytical method is sufficiently sensitive where:

1. The State Water Resources Control Board Minimum Level (ML) is at or below both the level of the applicable water quality criterion/objective and the permit limitation for the measured pollutant or pollutant parameter; or
2. In permit applications, the ML is above the applicable water quality criterion/objective, but the amount of the pollutant or pollutant parameter in a facility's discharge is high enough that the method detects and quantifies the level of the pollutant or pollutant parameter in the discharge; or
3. The method has the lowest ML of the U.S. EPA-approved analytical methods where none of the U.S. EPA-approved analytical methods for a pollutant can achieve the MLs necessary to assess the need for effluent limitations or to monitor compliance with a permit limitation.

The MLs in Appendix 4 of the *Policy for the Implementation of Toxics Standards for Inland Surface Waters, Enclosed Bays, and Estuaries of California*, February 2005, (the Policy), which adopted amendments to the State Implementation Policy, March 2000 (SIP) remain applicable. However, there may be situations when analytical methods are published with MLs that are more sensitive than the MLs for analytical methods listed in the Policy. For instance, U.S. EPA Method 1631E for mercury is not currently listed in Appendix 4 of the Policy and Appendix A of the General NPDES permit, but it is published with a method quantitation limit (also called reporting limit or minimum level) of 0.2 ng/L that makes it a sufficiently sensitive analytical method.

D. For any analyses performed for which no procedure is specified in the U.S. EPA guidelines or in the MRP, the constituent or parameter analyzed, and the method or procedure used must be specified in the monitoring report.

E. Laboratories analyzing effluent samples and receiving water samples shall be certified by the State Water Board, Division of Drinking Water (DDW) Environmental Laboratory Approval Program (ELAP) in accordance with Water Code section 13176 and must include quality assurance/quality control (QA/QC) data in their reports. A copy of the laboratory certification shall be provided each time a new certification and/or renewal of the certification is obtained from ELAP.

F. Each monitoring report must affirm in writing that “all analyses were conducted at a laboratory certified for such analyses by the State Water Board, DDW or approved by the Executive Officer and in accordance with current U.S. EPA guideline procedures or as specified in this Monitoring and Reporting Program”.

G. The monitoring reports shall specify the analytical method, the Method Detection Limit (MDL), and the ML for each pollutant. For reporting compliance with numerical limitations, performance goals, and receiving water limitations, analytical data shall be reported by one of the following methods, as appropriate:

1. An actual numerical value for sample results greater than or equal to the ML; or
2. “Detected, but Not Quantified (DNQ)” if results are greater than or equal to the laboratory’s MDL but less than the ML; or
3. “Not Detected (ND)” for sample results less than the laboratory’s MDL with the MDL indicated for the analytical method used.
4. Analytical data reported as “less than” for the purpose of reporting compliance with permit limitations shall be the same or lower than the permit limit(s) established for the given parameter.

   Current MLs, which are listed in Appendix A, are those published by the State Water Resources Control Board in the Policy.

H. The MLs employed for effluent analyses to determine compliance with effluent limitations shall be lower than the effluent limitations established for a given parameter as per the 40 CFR parts 122 and 136; Use of Sufficiently Sensitive Test Methods for Permit Applications and Reporting. If the ML value is not below the effluent limitation, then the lowest ML value and its associated analytical method shall be selected for compliance purposes. At least once a year, the Discharger shall submit a list of the analytical methods employed for each test and associated laboratory QA/QC procedures.

The MLs employed for effluent analyses not associated with determining compliance with effluent limitations in this order shall be lower than the lowest applicable water quality objective, for a given parameter. Water quality objectives for parameters may be found in the Basin Plan Chapter 3 and California Toxics Rule (40 CFR 131.38). If the ML value is not below the water quality objective, then the lowest ML value and its associated analytical method shall be selected for compliance purposes. At least once a year, the Discharger shall submit a list of the analytical methods employed for each test, the associated laboratory QA/QC procedures, reporting levels (RL's), and MDL

The Los Angeles Water Board, in consultation with the State Water Board Quality Assurance Program, shall establish a ML that is not contained in Appendix A to be included in the Discharger's permit in any of the following situations:

1. When the pollutant under consideration is not included in Appendix A;
2. When the Discharger and Los Angeles Water Board agree to include in the permit a test method that is more sensitive than that specified in 40 CFR Part 136 (revised May 18, 2012);
3. When the Discharger agrees to use an ML that is lower than that listed in Appendix A;
4. When the Discharger demonstrates that the calibration standard matrix is sufficiently different from that used to establish the ML in Appendix A, and proposes an appropriate ML for their matrix; or,
5. When the Discharger uses a method whose quantification practices are not consistent with the definition of an ML. Examples of such methods are the USEPA-approved method 1613 for dioxins and furans, method 1624 for volatile organic substances, and method 1625 for semi-volatile organic substances. In such cases, the Discharger, the Los Angeles Water Board, and the State Water Board shall agree on a lowest quantifiable limit and that limit will substitute for the ML for reporting and compliance determination purposes.

I. Water/wastewater samples must be analyzed within allowable holding time limits as specified in 40 CFR section 136.3. All QA/QC items must be run on the same dates the samples were actually analyzed, and the results shall be reported in the Los Angeles Water Board format, when it becomes available, and submitted with the

laboratory reports. Proper chain of custody procedures must be followed, and a copy of the chain of custody shall be submitted with the report.

J. All analyses shall be accompanied by the chain of custody, including but not limited to date and time of sampling, sample identification, and name of person who performed sampling, date of analysis, name of person who performed analysis, QA/QC data, method detection limits, analytical methods, copy of laboratory certification, and a perjury statement executed by the person responsible for the laboratory.

K. The Discharger shall calibrate and perform maintenance procedures on all monitoring instruments to ensure accuracy of measurements or shall insure that both equipment activities will be conducted.

L. The Discharger shall have, and implement, an acceptable written quality assurance (QA) plan for laboratory analyses. The annual monitoring report required in Section X.b.3. of this MRP shall also summarize the QA activities for the previous year. Duplicate chemical analyses must be conducted on a minimum of ten percent (10%) of the samples, or at least one sample per sampling period, whichever is greater. A similar frequency shall be maintained for analyzing spiked samples.

M. When requested by the Los Angeles Water Board or U.S. EPA, the Discharger will participate in the NPDES discharge monitoring report QA performance study. The Discharger must have a success rate equal to or greater than 80%.

N. For parameters that both monthly average and daily maximum limitations are specified, and the monitoring frequency is less than four times a month, the following shall apply. If an analytical result is greater than the monthly average limitation, the Discharger shall collect four additional samples at approximately equal intervals until compliance with the monthly average limitation has been demonstrated. All five analytical results shall be reported in the monitoring report for that month, or 45 days after results for the additional samples were received, whichever is later. In the event of noncompliance with a monthly average effluent limitation, the sampling frequency for that constituent shall be increased to weekly and shall continue at this level until compliance with the monthly average effluent limitation has been demonstrated. The Discharger shall provide for the approval of the Executive Officer a program to ensure future compliance with the monthly average limitation.

O. In the event wastes are transported to a different disposal site during the report period, the following shall be reported in the monitoring report:

1. Types of wastes and quantity of each type;

2. Name and address for each hauler of wastes (or method of transport if other than by hauling); and
3. Location of the final point(s) of disposal for each type of waste.

If no wastes are transported off-site during the reporting period, a statement to that effect shall be submitted.

P. Each monitoring report shall state whether or not there was any change in the discharge as described in the Order during the reporting period.

Q. All monitoring reports shall include the discharge limitations in the Order, tabulated analytical data, the chain of custody form, and the laboratory report (including but not limited to date and time of sampling, date of analyses, method of analysis and detection limits).

R. Each monitoring report shall contain a separate section titled "Summary of Non-compliance" which discusses the compliance record and corrective action taken or planned that may be needed to bring the discharge into full compliance with waste discharge requirements. This section shall clearly list all non-compliance with waste discharge requirements, as well as all excursions of effluent limitations.

S. Before commencing a new discharge, a representative sample of the effluent shall be collected and analyzed for toxicity and for all the constituents listed in Fact Sheet, and the test results must meet all applicable limitations of Order No. R4-2023-0429.

T. In the event of presence of oil sheen, debris, and/or other objectionable materials or odors, discharge shall not commence until compliance with the requirements is demonstrated. All visual observations shall be included in the monitoring report.

U. If monitoring results indicate an exceedance of a limit contained in Order R4-2023-0429, the discharge shall be terminated and shall only be resumed after remedial measures have been implemented and full compliance with the requirements has been ascertained.

V. In addition, as applicable, following an effluent limit exceedance, the Discharger shall implement the following accelerated monitoring program:

1. Monthly monitoring shall be increased to weekly monitoring
2. Quarterly monitoring shall be increased to monthly monitoring
3. Semi-annually monitoring shall be increased to quarterly
4. Annual monitoring shall be increased to semi-annually

If three consecutive accelerated monitoring events demonstrate full compliance with effluent limits, the Discharger may return to the regular monitoring frequency, with the approval of the Executive Officer of the Los Angeles Water Board.

II. MONITORING LOCATION

The Discharger shall establish the following monitoring location to demonstrate compliance with the effluent limitations, discharge specifications, and other requirements in this Order:

Table 1. Monitoring Point Information

Discharge Point Name	Monitoring Location Name	Monitoring Location Description
Discharge Point 1	M-001	Treated effluent, after treatment and before contact with the receiving water and/or dilution by any other water or waste.

III. INFLUENT MONITORING REQUIREMENTS (Not Applicable)

IV. EFFLUENT MONITORING REQUIREMENTS

The Discharger shall monitor the effluent at Discharge Point M-001. (The representative effluent samples shall be collected after all treatment processes (if any) while discharging and before contact or mixing with receiving water or other waters and/or dilution with any other water or waste.

Table 2. Monitoring Requirements

Parameter	Units	Sample Type	Minimum Sampling Frequency	Required Analytical Test Method
Flow	gal/day	totalizer	continuously[1]	N/A
Total yearly discharge volume[2]	million gallons	grab	yearly report	N/A
pH	pH units	grab	monthly	[3]
Temperature	°F	grab	monthly	[3]
Total Suspended Solids	mg/L	grab	monthly	[3]

[1] Record the monthly total flow and report the calculated daily average flow and monthly flow in the quarterly and annual reports, as appropriate.
[2] The total yearly discharge volume including the amount recycled at the facility shall be reported each year or at the end of the project and submitted in the annual monitoring report.
[3] Pollutants shall be analyzed using the analytical methods described in 40 CFR Part 136; for priority pollutants the methods must meet the lowest minimum levels (MLs) specified in Attachment 4 of the SIP (and included as Appendix A of this Order), where no methods are specified for a given pollutant, by methods approved by this Regional Water Board or the State Water Board

Parameter	Units	Sample Type	Minimum Sampling Frequency	Required Analytical Test Method
Turbidity	NTU	grab	monthly	[3]
$BOD_5$20ºC	mg/L	grab	monthly	[3]
Oil and Grease	mg/L	grab	monthly	[3]
Settleable Solids	ml/L	grab	monthly	[3]
Sulfides	mg/L	grab	monthly	[3]
Phenols	mg/L	grab	monthly	[3]
Residual Chlorine	mg/L	grab	monthly	[3]
Methylene Blue Active Substances (MBAS)	mg/L	grab	monthly	[3]
Selenium	µg/L	grab	monthly	[3]
Fecal Coliform	MPN/100 mL	grab	quarterly	[3]
Enterococci	MPN/100 mL	grab	quarterly	[3]
Acute Toxicity	Pass or Fail (TST), Percent (%) Effect[4,5]	grab	annually	[3]
PFAS[6]	ng/L[7]	grab	annually[8]	[3]

V. WHOLE EFFLUENT TOXICITY TESTING REQUIREMENTS

The MRP requires an annual test of Acute Toxicity, which measures primarily lethal effects that occur over a 96-hour period. Acute toxicity shall be recorded in percent survival measured in undiluted (100%) effluent. The final effluent limitations will be implemented using the methods for estimating acute toxicity of effluents and receiving waters to freshwater and marine organisms (U.S. EPA 2002, EPA-821-02-012), current U.S. EPA guidance in national pollutant discharge elimination system test of significant toxicity implementation document (EPA 833-R-10-003, June/2010).

[4] Percent Effect: The relative "Percent Effect" for the effluent is defined and reported as:((Mean control response - Mean discharge effluent response) ÷ Mean control response)) × 100.

[5] The Discharger shall conduct whole effluent toxicity monitoring using the fathead minnow, Pimephales promelas as the test species, as outlined in section V of this MRP. The maximum daily effluent limitation (MDEL) shall be reported as "Pass" or "Fail" and "% Effect, and the median monthly effluent limitation (MMEL) result shall be reported as "Pass" or "Fail".

[6] U.S. EPA Method 1633 or other ELAP-accredited methodologies for analyzing PFAS in wastewaters shall be used to meet the required reporting limit of 50 ng/L. The ELAP-accredited method for each group of compounds will specify which specific analytes can be measured. All analytes that can be measured using the selected ELAP-accredited method shall be analyzed.

[7] Nanogram per liter (ng/L)

[8] After three years of PFAS monitoring, the Discharger may request the Los Angeles Water Board to reduce or discontinue the monitoring of PFAS.

A. ACUTE TOXICITY EFFLUENT MONITORING PROGRAM

1. Acute Toxicity in Discharge Effluent

The Acute toxicity in-stream waste concentration is 100 percent effluent. Effluent samples shall be collected after all treatment processes (if applicable) and before discharge to the receiving water.

2. Sample Volume and Holding Time

The total sample volume shall be determined by the specific toxicity test method used. Sufficient sample volume shall be collected to perform the required toxicity test and TRE/TIE studies, if needed. All toxicity tests shall be conducted as soon as possible following sample collection. No more than 36 hours shall elapse before the conclusion of sample collection and test initiation.

3. Acute Toxicity Test Method

The Discharger shall conduct acute toxicity tests on effluent samples (e.g., grab samples) by methods specified in 40 CFR Part 136 which cites U.S. EPA's *Methods for Measuring the Acute Toxicity of Effluents and Receiving Waters to Freshwater and Marine Organisms*, Fifth Edition, October 2002, U.S. EPA, Office of Water, Washington D.C. (U.S. EPA 2002, EPA-821-02-012).

4. Acute Toxicity Test Species

The fathead minnow, *Pimephales promelas*, shall be used as the test species for discharge into freshwater and the topsmelt, *Atherinops affinis*, shall be used as the test species for discharge into coastal water. If the salinity of the receiving water is between 1 to 32 parts per thousand (ppt), the Discharger have the option of using the inland silverside, Menidia beryllina, instead of the topsmelt. The method for *Pimephales promelas* is found in U.S. EPA's Acute Toxicity Test Method 2000.0 and method for Menidia beryllina is found in U.S. EPA's Acute Toxicity Test Method 2006.0, or a more recent edition.

5. Additional Monitoring for TRE Determination and Compliance

When there is one violation of the MDEL or MMEL, the Discharger shall conduct additional acute toxicity testing, that shall be initiated within two weeks after the calendar month in which the MMEL or MEDL violation occurred. If the results of the additional toxicity test fail, then the discharger shall initiate a TRE/TIE as described in section 8 below. However, if the additional tests result in a "Pass" then the discharge is in compliance.

6. Quality Assurance and Additional Requirements

Quality assurance measures, instructions, and other recommendations and requirements are found in the test methods manual previously referenced. Additional requirements are specified below.

a. The discharge is subject to the determination of "Pass" or "Fail" and "Percent Effect" from an acute toxicity test using the Test of Significant Toxicity (TST)

statistical t-test approach described in the National Pollutant Discharge Elimination System Test of Significant Toxicity Implementation Document (EPA 833-R-10-003, 2010), Appendix A, Figure A-1, Table A-1 and Appendix B, Table B-1, and the procedures described in in the State Policy for Water Quality Control: Toxicity Provisions. The null hypothesis (Ho) for the TST approach is: Mean discharge effluent response ≤0.80 × Mean control response. A test result that rejects this null hypothesis is reported as "Pass." A test result that does not reject this null hypothesis is reported as "Fail." The relative "Percent Effect" at the discharge effluent is defined and reported as: The effluent water is not toxic because the response (e.g., survival) of the test organisms in the effluent water samples is greater than 80 percent of the test organism's response in the control water sample. ((Mean control response - Mean discharge effluent response) ÷ Mean control response)) × 100. This is a t-test (formally Student's t-Test), a statistical analysis comparing two sets of replicate observations - in the case of WET, only two test concentrations (i.e., control and effluent). The purpose of this statistical test is to determine if the means of the two sets of observations are different (i.e., if the discharge effluent differs from the control (the test result is "Pass" or "Fail")). The Welch's t-test employed by the TST statistical approach is an adaptation of Student's t-test and is used with two samples having unequal variances.

b. If the initial toxicity test, conducted in a given month, results in "Fail" at the IWC, then the Discharger shall initiate up to two additional acute toxicity tests in the remainder of the month to determine compliance with the MMEL. If the first additional test conducted in the month is also a "Fail," then that constitutes a violation of the MMEL. However, if the first and second additional tests result in a "Pass" then the discharge is in compliance with the MMEL.

c. If the effluent toxicity test does not meet all test acceptability criteria (TAC) and all required test conditions specified in the referenced WET methods manual (*Methods for Measuring the Acute Toxicity of Effluents and Receiving Waters to Freshwater and Marine Organisms* (U.S. EPA 2002, EPA-821-R-02-012) (See Table 4 for TAC below)), then the Discharger must re-sample and re-test within 14 days. Deviations from recommended test conditions, specified in the referenced *test Methods for Measuring the Acute Toxicity of Effluents and Receiving Waters to Freshwater and Marine Organisms* (U.S. EPA 2002, EPA-821-R-02-012), must be evaluated on a case-by-case basis to determine the validity of test results. The Discharger shall consider the degree of the deviation and the potential or observed impact of the deviation on the test results in consultation with Los Angeles Water Board staff before rejecting or accepting a test result as valid and shall report the results of the validity determination with supporting evidence for that decision in their monthly report.

Table 3. U.S. EPA Methods and Test Acceptability Criteria

Species & U.S. EPA Test Method Number	Test Acceptability Criteria
Topsmelt, *Atherinops affinis,* or the inland silverside, Menidia beryllina Larval Survival Test Method 2006.0 (Table 18 of Test Method referenced above).	90% or greater survival in controls

d. Dilution and control water, including brine controls, shall be laboratory water prepared and used as specified in the test methods manual. If dilution water and control water is different from test organism culture water, then a second control using culture water shall also be used.

e. When preparing samples for toxicity testing, in addition to the required monitoring for conductivity, etc., it is recommended that total alkalinity and total hardness be measured in the undiluted effluent, receiving water, dilution water, and culture water (following the WET methods manual), as well as the major geochemical ions (see Mount et al., 2018).

f. A reference toxicant test must be performed concurrently with each effluent toxicity test. All reference toxicant test results shall be reviewed and reported.

7. Preparation of an Initial Investigation Toxicity Reduction Evaluation (TRE) Work Plan

The Discharger shall prepare and submit an Initial Investigation TRE Work Plan within 180 days of the effective date of this Order. The Discharger shall review and update this work plan as necessary, so it remains current and applicable to the discharge. At a minimum, the work plan shall include:

a. A description of the investigation and evaluation techniques that will be used to identify potential causes and sources of toxicity, effluent variability, and treatment system efficiency.

b. A description of methods for maximizing in-house treatment efficiency, good housekeeping practices, and a list of all chemicals used in the operation of the Facility; and

c. If a TIE is necessary, an indication of the person who would conduct the TIEs (i.e., an in-house expert or an outside contractor).

8. Toxicity Reduction Evaluation (TRE) and Toxicity Identification Evaluation (TIE) Process

When any combination of two or more MDEL or MMEL violations within a single calendar month or within two successive calendar months, the Discharger shall initiate the TRE. The TRE shall include all reasonable steps to identify the source(s) of toxicity and discuss appropriate BMPs to eliminate the causes of toxicity. No later than 30 days after the source of toxicity and appropriate BMPs and/or treatment are

identified, the Discharger shall submit a TRE Corrective Action Plan to the Executive Officer for approval. At minimum, the plan shall include:

i. The potential sources of pollutant(s) causing toxicity.

ii. Recommended BMPs and/or treatment to reduce the pollutant(s) causing toxicity.

iii. Follow-up monitoring to demonstrate that toxicity has been removed.

iv. Actions the Discharger will take to mitigate the effects of the discharge and prevent the recurrence of toxicity.

v. A schedule for these actions, progress reports, and the final report.

vi. Many recommended TRE elements parallel required or recommended efforts for source control, pollution prevention, and storm water control programs. TRE efforts should be coordinated with such efforts. As toxic substances are identified or characterized, the Discharger shall continue the TRE by determining the sources and evaluating alternative strategies for reducing or eliminating the substances from the discharge. All reasonable steps shall be taken to reduce toxicity to levels consistent with toxicity evaluation parameters.

vii. The discharger may conduct a toxicity identification evaluation (TIE) as part of the TRE, if needed. The TIE should be conducted using the following EPA manuals: Methods for Aquatic Toxicity Identification Evaluations: Phase I Toxicity Characterization Procedures (EPA/600/6-91/003, 1991); Methods for Aquatic Toxicity Identification Evaluations, Phase II Toxicity Identification Procedures for Samples Exhibiting Acute and Chronic Toxicity (EPA/600/R-92/080, 1993); Methods for Aquatic Toxicity Identification Evaluations, Phase III Toxicity Confirmation Procedures for Samples Exhibiting Acute and Chronic Toxicity (EPA/600/R-92/081, 1993); and Marine Toxicity Identification Evaluation (TIE): Phase I Guidance Document (EPA/600/R-96-054, 1996).

viii. The Discharger shall conduct routine effluent monitoring for the duration of the TIE/TRE process.

ix. The Los Angeles Water Board recognizes that toxicity may be episodic and identification of causes and reduction of sources of toxicity may not be successful in all cases. The TRE may be ended at any stage if monitoring finds that there is no toxicity.

9. Reporting Toxicity Test Results

The Self-Monitoring Report (SMR) shall include a full laboratory report for each toxicity test. This report shall be prepared using the format and content of the test methods manual chapter called Report Preparation, including:

a. The valid toxicity test results for the TST statistical approach, reported as “Pass” or “Fail” and “Percent Effect” for the toxicity in effluent for the discharge. All toxicity

test results (whether identified as valid or otherwise) conducted during the calendar month shall be reported on the SMR.

The null hypothesis (Ho) for the TST statistical approach is: Mean discharge effluent response ≤0.80 × Mean control response for acute toxicity test. A test result that rejects this null hypothesis is reported as "Pass." A test result that does not reject this null hypothesis is reported as "Fail."

The effluent water is not toxic because the response (e.g., survival) of the test organisms in the effluent water samples is greater than 80 percent of the test organism's response in the control water sample.

The relative "Percent Effect" at the discharge effluent is defined and reported as: ((Mean control response - Mean discharge effluent response) ÷ Mean control response)) × 100.

b. Water quality measurements for each toxicity test (e.g., pH, dissolved oxygen, temperature, conductivity, hardness, salinity, chlorine, ammonia).

c. TRE/TIE results. The Executive Officer shall be notified no later than 30 days from completion of each aspect of TRE/TIE analyses.

B. AMMONIA REMOVAL

1. Except with prior approval from the Executive Officer of the Los Angeles Water Board, ammonia shall not be removed from bioassay samples. The Discharger must demonstrate the effluent toxicity is caused by ammonia because of increasing test pH when conducting the toxicity test. It is important to distinguish the potential toxic effects of ammonia from other pH sensitive chemicals, such as certain heavy metals, sulfide, and cyanide. The following may be steps to demonstrate that the toxicity is caused by ammonia and no other toxicants before the Executive Officer would allow for control of pH in the test.

   a. There is consistent toxicity in the effluent and the maximum pH in the toxicity test is in the range to cause toxicity due to increased pH.

   b. Chronic ammonia concentrations in the effluent are greater than 4 mg/L total ammonia.

   c. Conduct graduated pH tests as specified in the toxicity identification evaluation methods. For example, mortality should be higher at pH 8 and lower at pH 6.

   d. Treat the effluent with a zeolite column to remove ammonia. Mortality in the zeolite treated effluent should be lower than the non-zeolite treated effluent. Then add ammonia back to the zeolite-treated samples to confirm toxicity due to ammonia.

2. When it has been demonstrated that toxicity is due to ammonia because of increasing test pH, pH may be controlled using appropriate procedures which do not significantly alter the nature of the effluent, after submitting a written request to the Los Angeles Water Board and receiving written permission expressing approval from the Executive Officer of the Los Angeles Water Board.

C. CHLORINE REMOVAL

Except with prior approval from the Executive Officer of the Los Angeles Water Board, chlorine shall not be removed from bioassay sample.

D. REPORTING

The Discharger shall submit a full report of the toxicity test results, including any additional testing conducted during the month as required by this General permit. Test results shall be reported as % survival for acute toxicity test results with the self-monitoring reports (SMR) for the month in which the test is conducted.

1. If an initial TRE investigation indicates that the source of toxicity is undetermined, then those results also shall be submitted with the SMR for the period in which the investigation occurred.

   a. The full report shall be submitted on or before the end of the month in which the SMR is submitted.

   b. The full report shall consist of (1) the results; (2) the dates of sample collection and initiation of each toxicity test; (3) the acute toxicity effluent limit.

2. Test results for toxicity tests shall be reported according to the appropriate manual chapter on Report Preparation and shall be attached to the SMR. Routine reporting shall include, at a minimum, as applicable, for each test:

   a) Sample date(s);
   b) Test initiation date;
   c) Test species;
   d) End point values for each dilution (e.g., number of young, growth rate, percent survival);
   e) Any applicable charts; and
   f) Available water quality measurements for each test (e.g., pH, D.O., temperature, conductivity, hardness, salinity, ammonia).

3. The Discharger shall provide a compliance summary, which includes a summary table of toxicity data from all samples collected during that year.

The Discharger shall notify this Los Angeles Water Board by calling Noman Chowdhury (213) 576-6704 and by email to noman.chowdhury@waterboards.ca.gov

of any toxicity exceedance of the limit or trigger within 24 hours of receipt of the results followed by a written report within 14 calendar days of receipt of the results. The verbal or electronic notification shall include the exceedance and a plan that the Discharger has taken or will take to investigate and correct the cause(s) of toxicity. It may also include a status report on any actions required by the permit, with a schedule for actions not yet completed. If no actions have been taken, the reasons shall be given.

VI. LAND DISCHARGE MONITORING REQUIREMENTS (Not Applicable)

VII. RECLAMATION MONITORING REQUIREMENTS (Not Applicable)

VIII. RECEIVING WATER MONITORING REQUIREMENTS (Not Applicable)

IX. OTHER MONITORING REQUIREMENTS (Not Applicable)

X. REPORTING REQUIREMENTS

A. GENERAL MONITORING AND REPORTING REQUIREMENTS

The Discharger shall comply with all Standard Provisions (Attachment D) of Order No. R4-2023-0429 related to monitoring, reporting, and record keeping.

1. If there is no discharge during any reporting period, the report shall so state.

2. Each monitoring report shall contain a separate section titled “Summary of Non-Compliance” which discusses the compliance record and corrective actions taken or planned that may be needed to bring the discharge into full compliance with waste discharge requirements. This section shall clearly list all non-compliance with waste discharge requirements, as well as all excursions of effluent limitations.

3. The Discharger shall inform the Los Angeles Water Board well in advance of any proposed construction activity that could potentially affect compliance with applicable requirements.

B. SELF-MONITORING REPORTS

1. At any time during the term of this General NPDES permit, the State or Los Angeles Water Board may notify the Discharger to electronically submit Self-Monitoring Reports (SMRs) using the State Water Board’s California Integrated Water Quality System (CIWQS) Program Web site (http://www.waterboards.ca.gov/ciwqs/index.html). Until such notification is given, the Discharger shall email an electronic copy of SMRs to losangeles@waterboards.ca.gov. The CIWQS Web site will provide additional

directions for SMR submittal in the event there will be service interruption for electronic submittal.

2. The Discharger shall report in the SMR the results for all monitoring specified in this MRP. The Discharger shall submit SMRs including the results of all required monitoring using U.S. EPA-approved test methods or other test methods specified in this Order. If the Discharger monitors any pollutant more frequently than required by this Order, the results of this monitoring shall be included in the calculations and reporting of the data submitted in the SMR.

3. Monitoring periods and reporting for all required monitoring shall be completed according to the following schedule:

Table 4. Monitoring Periods and Reporting Schedule:

Sampling Frequency	**Monitoring Period Begins On**	**Monitoring Period**	**SMR Due Date**
Continuously	July 16, 2025	Continuously	Submit with quarterly SMR
Monthly	First day of calendar month following permit effective date or on permit effective date if that date is first day of the month.	1st day of calendar month through last day of calendar month.	Submit with quarterly SMR
Quarterly	Closest of January 1, April 1, July 1, or October 1 following (or on) permit effective date	Jan 1 through Mar. 31; Apr 1 through June 30; July 1 through 30; Oct. 1 through Dec. 31	45 days from the end of the monitoring period
Annually	January 1 following (or on) permit effective date	January 1 through December 31	45 days from the end of the monitoring period

4. Reporting Protocols. The Discharger shall report with each sample result the applicable Reporting Level (RL) and the current Method Detection Limit (MDL), as determined by the procedure in Part 136.

   The Discharger shall report the results of analytical determinations for the presence of chemical constituents in a sample using the following reporting protocols:

   a. Sample results greater than or equal to the RL shall be reported as measured by the laboratory (i.e., the measured chemical concentration in the sample).

b. Sample results less than the RL, but greater than or equal to the laboratory's MDL, shall be reported as "Detected, but Not Quantified," or DNQ. The estimated chemical concentration of the sample shall also be reported.

For the purposes of data collection, the laboratory shall write the estimated chemical concentration next to DNQ as well as the words "Estimated Concentration" (may be shortened to "Est. Conc."). The laboratory may, if such information is available, include numerical estimates of the data quality for the reported result. Numerical estimates of data quality may be percent accuracy (± a percentage of the reported value), numerical ranges (low to high), or any other means considered appropriate by the laboratory.

c. Sample results less than the laboratory's MDL shall be reported as "Not Detected," or ND.

d. Dischargers are to instruct laboratories to establish calibration standards so that the ML value (or its equivalent if there is differential treatment of samples relative to calibration standards) is the lowest calibration standard. At no time is the Discharger to use analytical data derived from *extrapolation* beyond the lowest point of the calibration curve.

5. The Discharger shall submit SMRs in accordance with the following requirements:

a. Data Summary Tables: The Discharger shall arrange all reported data in a tabular format. The data shall be summarized to clearly illustrate whether the facility is operating in compliance with interim and/or final effluent limitations. The Discharger is not required to duplicate the submittal of data that is entered in a tabular format within CIWQS. When electronic submittal of data is required and CIWQS does not provide for entry into a tabular format within the system, the Discharger shall electronically submit the data in a tabular format as an attachment.

b. Cover letter and Summary of Non-Compliance: The Discharger shall attach a cover letter to the SMR. The information contained in the cover letter shall clearly identify violations of the WDRs; discuss corrective actions taken or planned; and the proposed time schedule for corrective actions. Identified violations must include a description of the requirement that was violated and a description of the violation.

c. Paperless Submittal of SMRs: SMRs must be submitted to the Los Angeles Water Board, signed, and certified as required by the Standard Provisions (Attachment D) of Order No. R4-2023-0429. The Los Angeles Water Board is implementing a paperless office system to reduce paper use, increase efficiency and provide a more effective way for our staff, the public and interested parties to view water quality documents. Therefore, please convert all regulatory

documents, submissions, data, and correspondence that you would normally submit to us as hard copies to a searchable Portable Document Format (PDF). Documents that are less than 10 MB should be emailed to losangeles@waterboards.ca.gov. Documents that are 10 MB or larger should be transferred to a disk and mailed to the address listed below.

CRWQCB – Los Angeles Region
320 West 4th Street, Suite 200
Los Angeles, CA 90013
Attn: Enforcement Unit I

If you need additional information regarding electronic submittal of documents, please visit and navigate the Paperless Office pages in the Los Angeles Water Board's website at http://www.waterboards.ca.gov/losangeles/resources/Paperless/.

C. DISCHARGE MONITORING REPORTS (DMRs) (Not Applicable)

D. OTHER REPORTS (Not Applicable)

E. NOTIFICATION

A. The Discharger shall notify the Executive Officer in writing prior to discharge of any chemical which may be toxic to aquatic life. Such notification shall include:

1. Name and general composition of the chemical
2. Frequency of use
3. Quantities to be used
4. Proposed discharge concentrations and
5. U.S. EPA registration number, if applicable

No discharge of such chemical shall be made prior to obtaining the Executive Officer's approval.

B. The Discharger shall notify the Los Angeles Water Board by calling Noman Chowdhury at (213) 576-6704 and/or email to noman.chowdhury@waterboards.ca.gov within 24 hours of noticing an exceedance above the effluent limits in Order No. R4-2023-0429. The Discharger shall provide to the Los Angeles Water Board within 14 days of observing the exceedance a detailed statement of the actions undertaken or proposed that will bring the discharge into full compliance with the requirements and submit a timetable for correction.

C. Pre-Discharge Notification
Three (3) days prior to initiation of a discharge, the Discharger shall notify the Municipal Separate Storm Water System (MS4) operator Ventura County Public

Works at Discharge.alert@ventura.org and provide the following information about the discharge:

1. The reasons for discharge
2. The start date of discharge
3. The location of discharge and the applicable receiving water
4. The estimated flow rate discharge, indicating if the discharge is intermittent or continuous.

XI. MONITORING FREQUENCIES ADJUSTMENT

Monitoring frequencies may be adjusted by the Executive Officer to a less frequent basis if the Discharger requests and the request is backed by statistical trends of monitoring data submitted.

APPENDIX F– CITY DRAWING FILE NO. 2025-D-010 (151SHEETS)

CITY OF SAN BUENAVENTURA
PUBLIC WORKS DEPARTMENT - ENGINEERING DIVISION
INTERIM FIRE STATION NO. 7
Specification No. 2025-010
2269 ALESSANDRO DR (APN 076-0-010-115)

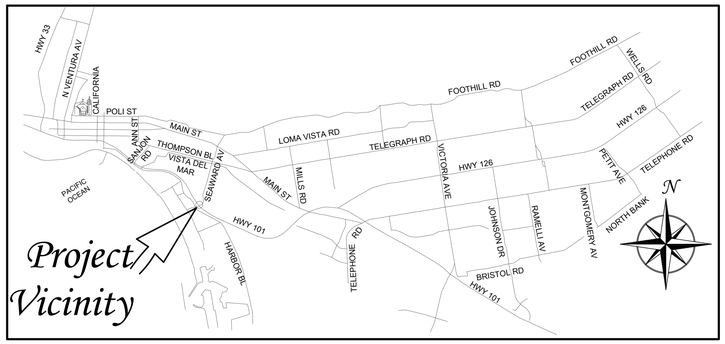

VICINITY MAP

NO SCALE

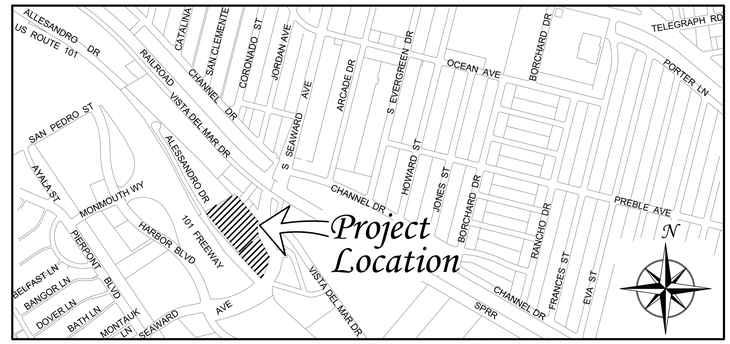

LOCATION MAP

NO SCALE

GENERAL NOTES

1. ALL WORK SHOWN HEREON SHALL BE CONSTRUCTED IN ACCORDANCE WITH THE "STANDARD SPECIFICATIONS FOR PUBLIC WORKS CONSTRUCTION," 2018 EDITION, AND ITS SUPPLEMENTS, THE MODIFICATIONS TO THOSE STANDARD SPECIFICATIONS CONTAINED IN THE CONTRACT SPECIFICATIONS AND THE CITY OF SAN BUENAVENTURA STANDARD CONSTRUCTION DETAILS.
2. IN ACCORDANCE WITH PROVISIONS OF CALIFORNIA PUBLIC CONTRACT CODE SECTION 3300, THE OWNER HAS DETERMINED THAT THE CONTRACTOR SHALL POSSESS A VALID "A" OR "B" LICENSE AT THE TIME THE CONTRACT BIDS ARE OPENED. FAILURE TO POSSESS THE SPECIFIED LICENSE SHALL RENDER THE BID AS NON-RESPONSIVE AND SHALL ACT AS A BAR TO AWARD OF CONTRACT TO ANY BIDDER NOT POSSESSING SAID LICENSE AT THE TIME OF BID OPENING. THE CONTRACTOR SHALL PRESENT SATISFACTORY EVIDENCE THAT THEY AND THEIR SUBCONTRACTOR(S) HAVE PAID THE BUSINESS LICENSE FEE(S) OF THE CITY OF SAN BUENAVENTURA BEFORE ENTERING INTO A CONTRACT WITH THE CITY.
3. THE CONTRACTOR SHALL NOTIFY THE FOLLOWING 72 HOURS IN ADVANCE OF CONSTRUCTION:
   UNDERGROUND SERVICE ALERT 811
   CITY OF VENTURA ENGINEERING DIVISION (805) 658-4778
4. UTILITIES AND FACILITIES ABOVE AND BELOW THE GROUND ARE LOCATED FROM THE BEST AVAILABLE RECORD INFORMATION. THE CONTRACTOR SHALL TAKE DUE PRECAUTIONARY MEASURES TO PROTECT THE UTILITIES OR FACILITIES SHOWN ON THE PLANS FROM HARM. ATTENTION IS DIRECTED TO POSSIBLE EXISTENCE OF UNDERGROUND UTILITIES OR FACILITIES NOT KNOWN TO THE CITY OR IN A LOCATION DIFFERENT FROM THAT WHICH IS SHOWN ON THE PLANS. THE CONTRACTOR SHALL TAKE STEPS TO ASCERTAIN THE EXACT LOCATION OF ALL UNDERGROUND UTILITIES AND FACILITIES PRIOR TO DOING WORK IN ORDER TO AVOID DAMAGE OF SUCH UTILITY OR FACILITY OR INTERFERE WITH THEIR SERVICE. WHERE UNDERGROUND MAIN DISTRIBUTION CONDUITS SUCH AS WATER, GAS, SEWER, ELECTRIC POWER, TELEPHONE , OR CABLE TELEVISION ARE SHOWN ON THE PLANS, THE CONTRACTOR SHALL ASSUME THAT EVERY PROPERTY PARCEL WILL BE SERVED BY A SERVICE CONNECTION FOR EACH TYPE OF UTILITY, OR AS DIRECTED BY THE ENGINEER.
5. SURVEY MONUMENTS, PROPERTY MARKERS, AND TIE POINTS SHALL BE PRESERVED AND REFERENCED BEFORE CONSTRUCTION AND REPLACED AFTER CONSTRUCTION PURSUANT TO SECTION 8771 F THE BUSINESS AND PROFESSIONS CODE.
6. BENCHMARK DISKS SHALL NOT BE DESTROYED, OR DISTURBED UNTIL A REPLACEMENT WITH A SECOND ORDER, CLASS ONE, GEODETIC ELEVATION HAS BEEN ACCEPTED BY THE CITY ENGINEER.
7. ALL WORK PERFORMED IN ACCORDANCE WITH CONDITIONS OF VENTURA COUNTY AIR POLLUTION CONTROL DISTRICT PERMIT AND CITY OF VENTURA ADMINISTRATIVE COASTAL DEVELOPMENT PERMIT CONDITIONS OF APPROVAL FOR CDP-06-23-0037.
8. HOURS OF WORK SHALL BE LIMITED TO 7:00 AM TO 5:00 PM MONDAY THROUGH FRIDAY EXCEPTING LEGAL OR CITY OBSERVED HOLIDAYS.
9. NOT LESS THAN TWO WEEKS PRIOR TO COMMENCEMENT OF DEMOLITION, ALL RESIDENCES WITHIN 500 FEET OF THE PROJECT SITE SHALL BE PROVIDED NOTIFICATION OF THE ACTIVITIES, CONSTRUCTION SCHEDULE AND EQUIPMENT TO BE USED.
10. THE APPARATUS BAY WILL BE DESIGNED WITH A FIRE SPRINKLER SYSTEM, AS APPROVED BY THE CITY OF VENTURA FIRE DEPARTMENT.
11. THIS SITE IS URBAN UNZONED FIRE HAZARD.

SCOPE OF WORK

THE SCOPE OF WORK CONSISTS OF THE INSTALLATION OF AN INTERIM FACILITY: LIVING QUARTERS, GYM, AND A APPARATUS BAY. BOTH LIVING QUARTERS AND GYM ARE FACTORY BUILT MODULAR. THE APPARATUS BAY IS SITE BUILT, PRE-ENGINEERED METAL BUILDING (PEMB). PROPOSED BUILDINGS WILL BE FIRE SPRINKLED, AS A SEPARATE PERMIT.

OWNER: CITY OF BUENAVENTURA

ADDRESS: 2269 ALESSANDRO DR

APN: APN 076-0-010-115

LOT SIZE: 133,585 SF (3.0 AC)

FIRE ZONE: URBAN UNZONED FIRE HAZARD

BLDG AREAS:

APPARATUS BAY= 5,000 SQ.FT.
LIVING QUARTERS= 2,880 SQ.FT.
MULTI PURPOSE ROOM= 960 SQ.FT.

EXISTING FIRE HYDRANTS ARE SUFFICIENT FOR FIRE WATER SUPPLY DEMANDS OF BUILDINGS.

UTILITIES/SERVICES

WATER:	VENTURA WATER 336 SAN JON RD VENTURA, CA 93001 (805)652-4505	GAS:	SO. CALIFORNIA GAS CO. 9400 OAKDALE AVE CHATSWORTH, CA 91313 (818)701-3319
SEWER:	VENTURA WATER 1400 SPINNAKER DR VENTURA, CA 93001 (805)677-4118	TELEPHONE:	AT&T 1264 CALLENS RD VENTURA, CA 93003 (805)639-0540
STORM DRAIN:	VENTURA PUBLIC WORKS 336 SANJON RD VENTURA, CA 93001 (805)652-4521	CABLE TV:	TIME WARNER 2525 KNOLL DR VENTURA, CA 93003 (805)477-4439
ELECTRIC:	SO. CALIFORNIA EDISON CO. 10060 TELEGRAPH RD VENTURA, CA 93004 (805)654-7476	CABLE TV:	CHARTER CABLE 51 W. MAIN ST VENTURA, CA 93001 (805)648-5705

CBC CODE COMPLIANCE SUMMARY

A. BUILDING TYPE OF CONSTRUCTION:
   - TYPE II-B, NON-COMBUSTIBLE CONSTRUCTION; GOVERNS DUE TO NON-SEPARATED MIXED OCCUPANCY.

B. BUILDING OCCUPANCY CLASSIFICATION:
   - GROUP S-2, APPARATUS BAY (FIRE ENGINE CARPORT).
   - GROUP R-2, LIVING QUARTERS (SLEEPING AND RESIDENTIAL USE).

C. CONDITIONED VS. NON-CONDITIONED AREAS PER OCCUPANCY:
   - R-2 LIVING QUARTERS, CONDITIONED.
   - S-2 APPARATUS BAY, NON CONDITIONED, OPEN CARPORT STYLE APPARATUS BAY.

D. NUMBER OF STORIES:
   - 1 STORY, TOTAL BUILDING AREA = 7,880 S.F. MIXED OCCUPANCY.

E. MIXED OCCUPANCY METHOD:
   - NON SEPERATED MIXED OCCUPANCY - R-2 - GOVERNS AREA AND CONSTRUCTION TYPE.

F. FIRE PROTECTION:
   - AUTOMATIC FIRE SPRINKLER SYSTEM PER NFPA 13.

CALIFORNIA BUILDING CODES

CBC APPLICABLE CODES: 2025 CBC, 2025 CGBSC, 2025 CFC, 2025 NFPA, 2025 CAC, 2025 CCR, 2025 CAL GREEN, 2025 CEC, 2025 CMC, 2025 CPC, 2025 CENC.

CITY OF BUENAVENTURA MUNICIPAL CODES

APPLICABLE CODES: 2020 SMBC

SHEET INDEX

SHEET NUMBER	SHEET TITLE
1	COVER SHEET
2	CODE PLAN
3	ABBREVIATIONS AND SYMBOL LEGEND
4	SITE PLAN AND GEOMETRIC CONTROL PLAN
5	GRADING AND IMPROVEMENTS COVER SHEET
6	GRADING AND DRAINAGE PLAN
7	SITE CROSS SECTIONS
8	GRADING AND DRAINAGE DETAILS
9	UTILITY PLAN
10	SANITARY SEWER STANDARD DETAILS
11	CLARIFIER SYSTEM DETAILS
12	BIOSWALE DETAILS
13	TRASH ENCLOSURE DETAILS
14	WALKWAY LIGHTING DETAILS
15	CURB, GUTTER, & SIDEWALK STANDARD DETAILS
16	WATER STANDARD DETAILS
17	CONSTRUCTION DETAILS
18	FENCE GATE IMPROVEMENTS AND DETAILS
19	TELECOM PLAN
20	FIRE DEPARTMENT PLAN
21-33	BUILDING STRUCTURAL PLANS AND DETAILS
34	ARCHITECTURAL
35-63	APPARATUS BAY PLANS
64-74	FIRE ALARM AND SPRINKLER PLANS
75-80	MECHANICAL PLANS
81-82	ENERGY COMPLIANCE DOCUMENTATION
83-87	PLUMBING PLANS
88	FIRE STATION ALERT SYSTEM PLANS
89-95	LANDSCAPING PLANS AND DETAILS
96-114	ELECTRICAL PLANS
115-140	LIVING QUARTER PLANS
141-149	GYM PLANS
150-151	SOUTHERN CALIFORNIA EDISON PLANS

UNDERGROUND SERVICE ALERT
CALLTHREE WORKING DAYS
BEFORE YOU DIG:

811
Know what's below.
Call before you dig.

GRADING PLANS PER SEPARATE PERMIT
FIRE SPRINKLER PLANS PER SEPARATE PERMIT
FIRE ALERT SYSTEM PLANS PER SEPARATE PERMIT
DEFERRED SUBMITTALS GLOBAL MODULAR PLANS

CONSULTANT DIRECTORY

STRUCTURAL:	KPFF CONSULTING ENGINEERS 700 FLOWER STREET, #2100 LOS ANGELES, CA 90017 (213) 418-0201, kathrin.klemm@kpff.com	ELECTRICAL:	CANNON 16842 VON KARMAN AVENUE, #150 IRVINE, CA 92606 (919) 753-8111, DineshP@CannonCorp.us	LANDSCAPING:	DESIGN STUDIO LANDSCAPE DEVELOPMENT 88 N. OAK STREET, SUITE 1A VENTURA, CA 93001 (805) 225-3836, rleo@landscapedevelopment.com
PLUMBING AND: MECHANICAL	3C ENGINEERING, INC. 1500 PALM STREET SAN LUIS OBISPO, CA 93401 (805) 540-3363, dstanger@3ceng.com	FIRE ALERTING: AND DISPATCH	HONEYWELL FIRE SYSTEMS william.butler2@honeywell.com	ENVIRONMENTAL:	RINCON CONSULTANTS, INC. 180 N. ASHWOOD AVENUE VENTURA, CA 93003 (805) 644-4455, emutkowska@rinconconsultants.com
FIRE ALARM:	COLLINGS AND ASSOCIATES LLC 260 MAPLE COURT, #241 VENTURA, CA 93003 (805) 658-0003, ayakel@collingsandassociates.com	BUILDING:	CLEARSPAN STRUCTURES 1395 JOHN FITCH BLAVD. SOUTH WINDSOR, CT 06074 (866) 643-1010, lmelssen@farmtek.com	GEOTECHNICAL:	EARTH SYSTEMS 5917 OLIVAS PARK DRIVE, SUITE F VENTURA, CA 93003 (805) 642-6727, tmazzei@earthsystems.com
		BUILDING:	GLOBAL MODULAR, INC. 450 COMMERCE AVENUE ATWATER, CA 95301 (209) 676-8029, dperez@gdvi.net		

PARKING ANALYSIS

LIVING QUARTERS FLOOR AREA=2,880 SQ.FT.

PARKING SPACES REQUIRED: ONE SPACE FOR EVERY 300 SQ.FT. OF GROSS FLOOR AREA.

$\frac{2,880 \text{ SQ.FT.}}{300 \text{ SQ.FT.}}$ = 9.6 PARKING SPACES REQUIRED.

PROPOSED NUMBER OF PARKING SPACES FOR INTERIM FIRE STATION=10 PARKING SPACES

THE APPARATUS BAY AND GYM STRUCTURES WILL BE USED AS FIRE ENGINE CARPORTS AND STAFF EXERCISE EQUIPMENT: NO OFF-STREET PARKING REQUIRED.

PLUMBING FIXTURE ANALYSIS

OCCUPANCY GROUP S, STORAGE, CPC 422.1. WHAREHOUSE/STORAGE
LOAD FACTOR: 300 GROSS SF/PERSON, PER CBC TABLE 1004.5

APPARATUS BAY AREA: 5,900 SF

OCCUPANT LOAD = $\frac{5,900 \text{ SF}}{300 \text{ SF/PERSON}}$ = 20 OCCUPANTS

FIXTURE TYPE		REQUIRED QUANTITY
WATER CLOSETS (WC)	1 PER 100 EMPLOYEES PER SEX	2 (1M, 1F)
	REQUIRED = $\frac{10}{100}$ = 0.1 $\xrightarrow{\text{ROUND UP}}$ 1.0	
LAVATORIES	1 PER 100 OCCUPANTS PER SEX	2 (1M, 1F)
	REQUIRED = $\frac{10}{100}$ = 0.1 $\xrightarrow{\text{ROUND UP}}$ 1.0	
Drinking Fountain	1 Per 400 Occupants Per Sex	1
	Required = $\frac{20}{100}$ = 0.5 $\xrightarrow{\text{Round Up}}$ 1.0	
Service Sink	1 Per Building	1

REVIEWED BY: 6 May 2026
DATE

Barbara McCormack
FLEET AND FACILITIES MANAGER

REGISTERED PROFESSIONAL ENGINEER
DANIELA HASZA
NO. 92225
CIVIL
STATE OF CALIFORNIA

REV.	DESCRIPTION	CK'D	APP	DATE

PUBLIC WORKS DEPARTMENT ENGINEERING DIVISION
CITY OF SAN BUENAVENTURA
INTERIM FIRE STATION NO. 7
COVER SHEET

DRN. BY: DAG | DES. BY: GDK | CK'D. BY: GDK

PRINCIPAL ENGINEER — 5 May 2026 DATE
CITY ENGINEER — 5/7/2026 DATE

SPEC. NUMBER 2025-010 | PROJECT NUMBER FA11-1061

April 27, 2026 | SHEET 1 OF 151 | DWG. NO. 2025-D-010

CODE ANALYSIS

GENERAL INFORMATION AND OCCUPANCY

OCCUPANCY

304.1	CIVIC ADMINISTRATION	GROUP B
310.1	DORMITORY	GROUP R-2
311.3	LOW-HAZARD STORAGE	GROUP S-2

AUTOMATIC FIRE SPRINKLERS

903.2	AUTOMATIC FIRE SPRINKLERS	PROVIDED

CONSTRUCTION TYPE

T-601	CONSTRUCTION TYPE	TYPE V-B

ALLOWABLE HEIGHT & AREA

508.3	NON-SEPARATED OCCUPANCIES, EXCEPTION 2	1-HR SEPARATION BETWEEN R-2 AND OTHER OCCUPANCIES
T-504.3	ALLOWABLE BUILDING HEIGHT (R-2, S, WITH AREA INCREASE)	40 FEET
T-504.4	ALLOWABLE NUMBER OF STORIES (R-2, S)	2 STORIES
T-506.2	ALLOWABLE BUILDING AREA WITH SPRINKLERS (R-2, S)	21,000 SF
504.2	FIRE SPRINKLER HEIGHT INCREASE	N/A
506.3	FRONTAGE INCREASE	N/A
506.3	AREA INCREASE	N/A

ACTUAL AREA - STATION

01-GROUND FLOOR	
S-2	5,900 SF
B	
R-2	2,880 SF
	8,780 SF

CODE ANALYSIS

TYPE IIB SPRINKELRED - APPARATUS BAY

CONSTRUCTION TYPE: VB - SPRINKLERED IN ACCORDANCE WITH CBC §903.3.1.1 - LIVING QUARTERS MODULAR

OCCUPANCY GROUP: B, R-2, AND S-2 - NON-SEPARATED OCCUPANCY

PER CBC §508.3.2 MOST RESTRICTIVE OCCUPANCY WILL GOVERN THEREFORE OCCUPANCY GROUP R-2 WILL BE USED.

PER EXCEPTION 2: PROVIDE SEPARATION BETWEEN R-2 OCCUPANCY AND OTHER OCCUPANCIES CONTIGUOUS TO THEM IN ACCORDANCE WITH THE REQUIREMENTS OF CBC §420.

BUILDING HEIGHT	20'-0"	
ALLOWABLE HEIGHT:	40'-0" PER TABLE 504.3	O.K
NO. OF STORIES	1	
ALLOWABLE NO. OF STORIES PER TABLE 504.4 (WITH AREA INCREASE)	2	O.K.
FIRST FLOOR AREA:	8,780 SF	
ALLOWABLE AREA:	21,000 S.F. PER TABLE 506.2 21,000 S.F. > 13,647 S.F.	O.K.

PLUMBING CALCULATIONS

OCCUPANT LOAD PER CPC SECTION 422, TABLE-A:

S-2	= (1 OCC / 5,000 SF)	X 5,900 SF = 2 OCC
B	= (1 OCC / 200 SF)	X 2,880 SF = 15 OCC
R-2	= (1 OCC / 200 SF)	

PER EXCEPTIONS UNDER CPC SECTION 422.2, SEPERATE FACILITIES FOR EACH SEX ARE NOT REQUIRED IN:
A) RESIDENTIAL INSTALLATIONS
B) IN OCCUPANCIES WITH A TOTAL OCCUPANT LOAD OF 10 OR LESS.
C) IN BUSINESS OR MERCANTILE OCCUPANCIES WITH A TOTAL OCCUPANT LOAD OF 50 OR LESS.

PER CPC SECTION 415.2, WHERE FOOD IS CONSUMED INDOORS, WATER STATIONS SHALL BE PERMITTED TO BE SUBSTITUTED FOR DRINKING FOUNTAINS.

REQUIRED FIXTURES PER CPC TABLE 422.1 AND SECTION 422.2:

S-2:	TOILETS:	1 SINGLE OCCUPANCY
	SINKS:	1 SINGLE OCCUPANCY
B:	TOILETS:	*PART OF R-2 TOTAL*
	SINKS:	
R-2:	TOILETS:	2 + 1 URINAL SINGLE OCCUPANCY
	SINKS:	2 SINGLE OCCUPANCY
	SHOWERS:	2

PROVIDED:

S-2:	TOILETS:	
	SINKS:	*PART OF R-2 TOTAL*
B:	TOILETS:	
	SINKS:	
R-2:	TOILETS:	4
	SINKS:	4 SINGLE OCCUPANCY
	SHOWERS:	4

CODE PLAN

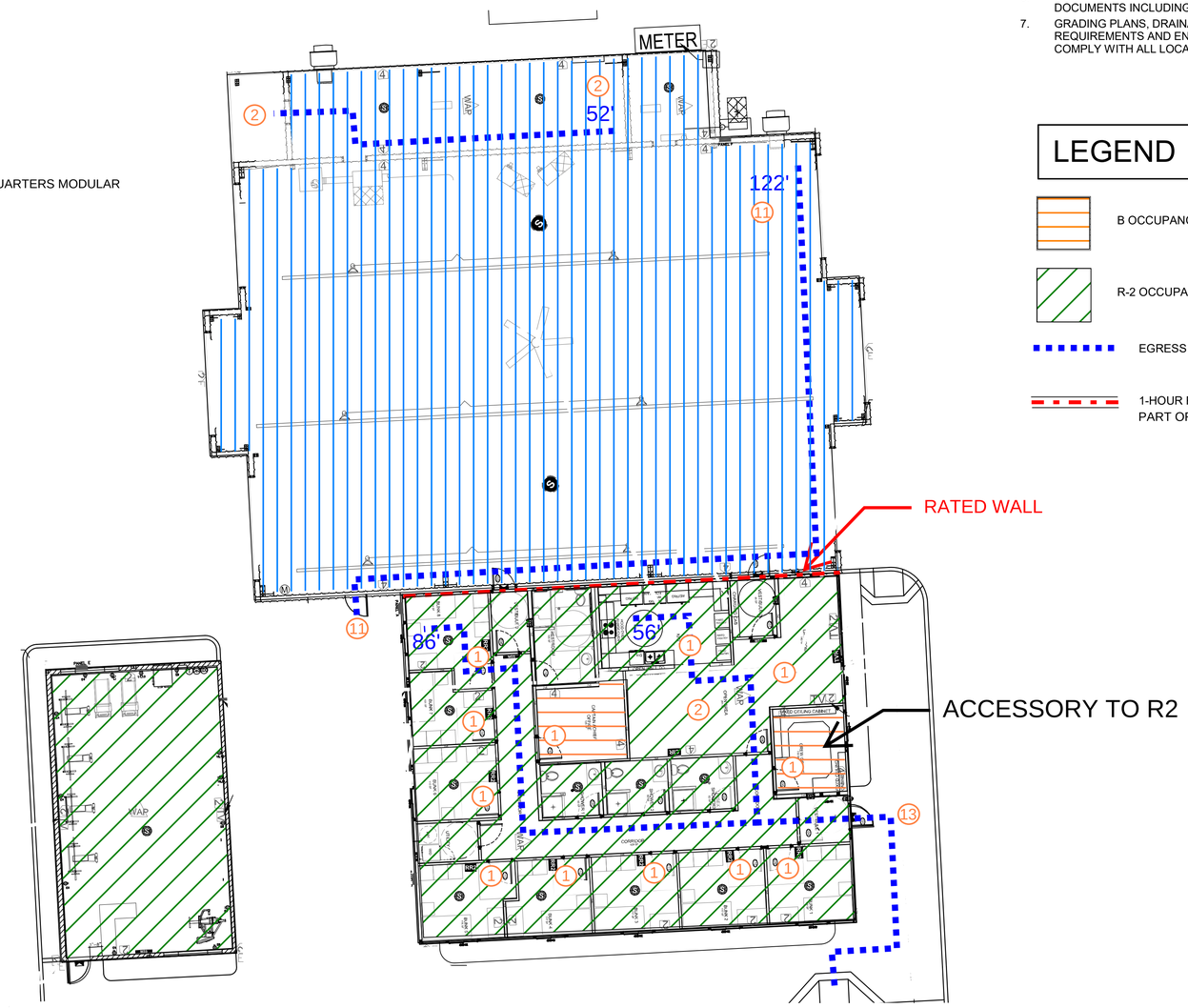

GENERAL NOTES

1. APPLICABLE CODES AND STANDARDS:
1.1. 2022 CALIFORNIA BUILDING CODE AND ITS APPENDICES AND STANDARDS.
1.2. 2022 CALIFORNIA PLUMBING CODE AND ITS APPENDICES AND STANDARDS.
1.3. 2022 CALIFORNIA MECHANICAL CODE AND ITS APPENDICES AND STANDARDS.
1.4. 2022 CALIFORNIA FIRE CODE AND ITS APPENDICES AND STANDARDS.
1.5. 2022 CALIFORNIA ELECTRICAL CODE AND ITS APPENDICES AND STANDARDS.
1.6. 2022 CALIFORNIA BUILDING ENERGY EFFICIENCY STANDARDS.
1.7 2022 CALIFORNIA GREEN BUILDING STANDARDS CODE AND ITS APPENDICIES AND STANDARDS.
2. ALL WORK DESCRIBED IN THE DRAWINGS SHALL BE VERIFIED FOR DIMENSION, GRADE, EXTENT AND COMPATIBILITY WITH EXISTING SITE CONDITIONS. ANY DISCREPANCIES AND UNEXPECTED CONDITIONS THAT AFFECT OR CHANGE THE WORK DESCRIBED IN THE CONTRACT DOCUMENTS SHALL BE BROUGHT TO THE ARCHITECT'S ATTENTION IMMEDIATELY. DO NOT PROCEED WITH THE WORK IN THE AREA OF DISCREPANCIES UNTIL ALL SUCH DISCREPANCIES ARE RESOLVED. IF THE CONTRACTOR CHOOSES TO DO SO, HE/SHE SHALL BE PRECEDING AT HIS/HER OWN RISK.
4. DIMENSIONS SHOWN SHALL TAKE PRECEDENCE OVER DRAWING SCALE OR PROPORTION. LARGER SCALE DRAWINGS SHALL TAKE PRECEDENCE OVER SMALLER SCALE DRAWINGS.
5. IN THE EVENT OF THE UNFORESEEN ENCOUNTER OF MATERIALS SUSPECTED TO BE OF AN ARCHAEOLOGICAL OR PALEONTOLOGICAL NATURE, ALL GRADING AND EXCAVATION SHALL CEASE IN THE IMMEDIATE AREA AND THE THE CONTRACTOR SHALL NOTIFY THE OWNER. THE FIND SHALL BE LEFT UNTOUCHED UNTIL AN EVALUATION BY A QUALIFIED ARCHAEOLOGIST OR PALEONTOLOGIST IS MADE.
6. CONTRACTOR IS TO BE RESPONSIBLE FOR BEING FAMILIAR WITH THESE DOCUMENTS INCLUDING ALL CONTRACT REQUIREMENTS.
7. GRADING PLANS, DRAINAGE IMPROVEMENTS, ROAD AND ACCESS REQUIREMENTS AND ENVIRONMENTAL HEALTH CONSIDERATIONS SHALL COMPLY WITH ALL LOCAL ORDINANCES.

LEGEND

- B OCCUPANCY
- S-2 OCCUPANCY
- R-2 OCCUPANCY
- EGRESS PATH OF TRAVEL
- 1-HOUR RATED FIRE PARTITION IN ACCORDANCE WITH CBC 708 PART OF MODULAR BUILDING

URBAN UNZONED FIRE HAZARD

REV.	DESCRIPTION	CK'D	APP	DATE

PUBLIC WORKS DEPARTMENT ENGINEERING DIVISION
CITY OF SAN BUENAVENTURA

INTERIM FIRE STATION NO. 7
CODE PLAN

DRN. BY: DAG	DES. BY: RTH	CK'D. BY: RTH

PRINCIPAL ENGINEER — DATE: 5 May 2026
CITY ENGINEER — DATE: 5/7/2026

SPEC. NUMBER 2025-010 | PROJECT NUMBER FA11-1061

October 8, 2025 | SHEET 2 OF 151 | DWG. NO. 2025-D-010

ABBREVIATIONS

AB	AGGREGATE BASE
ABAN	ABANDONED
AC	ASPHALT CONCRETE
ACP	ASBESTOS CEMENT PIPE
ADMIN	ADMINISTRATION
APN	ASSESSORS PARCEL NUMBER
ARV	AIR RELEASE VALVE
ASB	AGGREGATE SUBBASE
ASPH	ASPHALT
AV	AVENUE
BIP	BLACK IRON PIPE
BC	BEGINNING OF CURVE
BCR	BEGINNING OF CURB RETURN
BL, BLVD	BOULEVARD
BLDG	BUILDING
BM	BENCHMARK
BO	BLOW OFF
BP	BEGIN PIPELINE, BOLLARD / GUARD POST
BPR	BEGIN PAVEMENT RETURN
BTM	BRASS TOP MONUMENT
BVC	BEGINNING OF VERTICAL CURVE
C, CTR	CENTER
CALC	CALCULATED
CALTRANS	CALIFORNIA TRANSPORTATION
CATV	CABLE TELEVISION
CB	CATCH BASIN
CF	CURBFACE
CHX	CHISELED "X"
CIP	CAST IRON PIPE
CL	CENTERLINE
CML&C	CEMENT LINED AND COATED
CMP	CORRUGATED METAL PIPE
CMU	CONCRETE MASONRY UNIT
CO	CLEAN OUT
CONC	CONCRETE
CR	COUNTY RECORDER, CURB RETURN
CP	CONTROL POINT
CWS	CROSS WALK SIGNAL
DI	DRAIN INLET
DIA	DIAMETER
DIP	DUCTILE IRON PIPE
DMH	DRAIN MANHOLE
DR	DRIVE
E	EAST, EXISTING
EC	END OF CURVE
ECR	END OF CURB RETURN
EF	EACH FACE
EFF	EFFLUENT
EL, ELEV	ELEVATION
EL, ELEC	ELECTRIC
EMH	ELECTRIC MANHOLE
EP	EDGE OF PAVEMENT, END PIPELINE
EPR	END OF PAVEMENT RETURN
ES	EDGE OF SHOULDER
ESMT	EASEMENT
ET AL	AND OTHERS
EVC	END OF VERTICAL CURVE
EW	EACH WAY
EXIST, EX	EXISTING
FB	FIELD BOOK
FG	FINISHED GRADE
FH	FIRE HYDRANT
FL	FLOWLINE
FS	FINISHED SURFACE
FT	FOOT, FEET
FWY	FREEWAY

G	GAS
GAL	GALLON
GALV	GALVANIZED
GIP	GALVANIZED IRON PIPE
GV	GAS VALVE
GY	GUY WIRE
HDPE	HIGH DENSITY POLYETHYLENE
HGL	HYDRAULIC GRADE LINE
HH	HAND HOLE
H/W	HEADWALL
ICL	IRRIGATION CONTROL LID
ID	INSIDE DIAMETER
INV	INVERT
IP	IMPROVEMENT DISTRICT, IRON PIN
IRR	IRRIGATION
L	LENGTH (OF ARC)
LANDSC	LANDSCAPE
LF	LINEAR FOOT, LINEAR FEET
LD	LAND DIVISION
LN	LANE
MAG CHK	MAGNETIC NAIL SURVEY MARKER
MAINT	MAINTENANCE
MAX	MAXIMUM
MC	MIDDLE OF CURVE
MCSD	MONTALVO COMMUNITY SERVICES DISTRICT
MH	MANHOLE
MHD	STORM DRAIN MANHOLE
MIN	MINIMUM
MLLW	MEAN LOW LOW WATER
MON	MONUMENT
MR	MISCELLANEOUS RECORDS
MW	WATER MONITORING WELL
N	NORTH, NEW
NAT GRD	NATURAL GROUND
NIC	NOT IN CONTRACT
NO	NUMBER
OD	OUTSIDE DIAMETER
OG	ORIGINAL GROUND
OH	ORCHARD HEAD
OR	OFFICIAL RECORD
OVHD	OVERHEAD
PAV	PAVING
PC	POINT OF CURVATURE
PCC	POINT OF COMPOUND CURVE, PORTLAND CEMENT CONCRETE
PD	PLANNED DEVELOPMENT
PI, P.I.	POINT OF INTERSECTION
PMT	PARKING METER
PL	PROPERTY LINE
PMB	PROCESSED MISCELLANEOUS BASE
PNT	POINT
POB	POINT OF BEGINNING
POC	POINT ON CURVE, POINT OF COMMENCEMENT
POST	POINT OF SEMI-TANGENT
POT	POINT ON TANGENT
PP	POWER POLE
PPSL	POWER POLE STREET LIGHT
PRC	POINT OF REVERSE CURVE
PROP	PROPOSED
PRV	PRESSURE REDUCING VALVE
PT	POINT OF TANGENCY
PUE	PUBLIC UTILITY EASEMENT
PV	PETROLEUM OIL VALVE
PVC	POLY VINYL CHLORIDE
PVMT	PAVEMENT

Q	FLOW, CFS
RCB	REINFORCED CONCRETE BOX
RCP	REINFORCED CONCRETE PIPE
RD	ROAD
RH	REDHEAD
RO	RANCHO
RP	REFERENCE POINT, RADIAL POINT
RR	RAILROAD, RESTROOM
RS	RECORD OF SURVEY
R/W	RIGHT OF WAY
RW	RECYCLED/RECLAIMED WATER
S	SOUTH
SBMD	STANDARD BENCHMARK DISC
SCE	SOUTHERN CALIFORNIA EDISON
SCO	SEWER CLEANOUT
SD	STORM DRAIN, SEWER DISTRICT
SDMH	STORM DRAIN MANHOLE
SDR	SURFACE DRAIN
SL	SURVEY LINE, STREET LIGHT
SLS	STREET LIGHT STANDARDS
SMH	SANITARY SEWER MANHOLE
SNM	SELECT NATURAL MATERIAL
SP	STEEL PIPE
SPRR	SOUTHERN PACIFIC RAILROAD
SS	SANITARY SEWER, SLOPE STAKE
SS1	STREET SIGN 1
SS2	STREET SIGN 2
SSM	STANDARD SURVEY MONUMENT
SSPWC	STANDARD SPECIFICATIONS FOR PUBLIC WORKS CONSTRUCTION
ST	STREET
STA	STATION
STD	STANDARD
ST HWY	STATE HIGHWAY
STL	STEEL
ST LT	STREET LIGHT
TB	TOP OF BERM, TOP OF BANK
TBM	TEMPORARY BENCHMARK
TC	TOP OF CURB
TELE	TELEPHONE
TMH	TELEPHONE MANHOLE
TOPO	TOPOGRAPHY
TLP	TRAFFIC LOOP
TP	TURNING POINT, TELEPHONE POLE
TPOB	TRUE POINT OF BEGINNING
TR	TRAFFIC, TRACT
TSL	TRAFFIC SIGNAL LIGHT
TSS	TRACK SIGNAL STANDARD
TSSL	TRACK SIGNAL STREET LIGHT
TV	TELEVISION
TW	TOP OF WALL
TYP	TYPICAL
UG	UNDERGROUND
UMH	UTILITY MANHOLE, UNMARKED MANHOLE
V	VOLT
VB	VALVE BOX
VC	VERTICAL CURVE
VCP	VITRIFIED CLAY PIPE
VNT	VENT
VPI	VERTICAL POINT OF INTERSECTION
W	WEST, WATER
WFHD	WHARFHEAD FIRE HYDRANT
W/W	WINGWALL
WV	WATER VALVE
X-SEC	CROSS SECTION

CITY UTILITY CALLOUT LEGEND

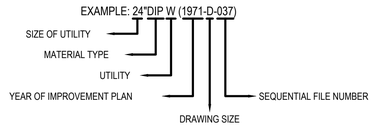

SERVICE LINES

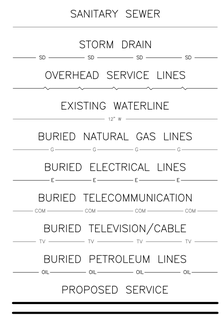

SURVEY MAP SYMBOLS

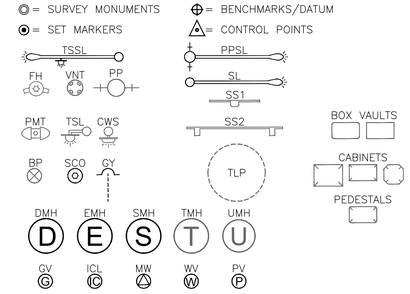

CALIFORNIA ENVIROMENTAL QUALITY ACT CONDITIONS OF APPROVAL

FENCE TYPES

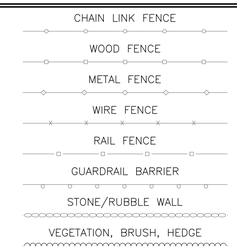

REV.	DESCRIPTION	CK'D	APP	DATE

PUBLIC WORKS DEPARTMENT ENGINEERING DIVISION

CITY OF SAN BUENAVENTURA

INTERIM FIRE STATION NO. 7

ABBREVIATIONS AND SYMBOL LEGEND

DRN. BY: DAG	DES. BY: GDK	CK'D. BY: GDK

PRINCIPAL ENGINEER — DATE: 5 May 2026

CITY ENGINEER — DATE: 5/7/2026

REGISTERED PROFESSIONAL ENGINEER — DANIELA HASA — NO. 92225 — CIVIL — STATE OF CALIFORNIA

SPEC. NUMBER 2025-010	PROJECT NUMBER FA11-1061
April 27, 2026	SHEET 3 OF 151	DWG. NO. 2025-D-010

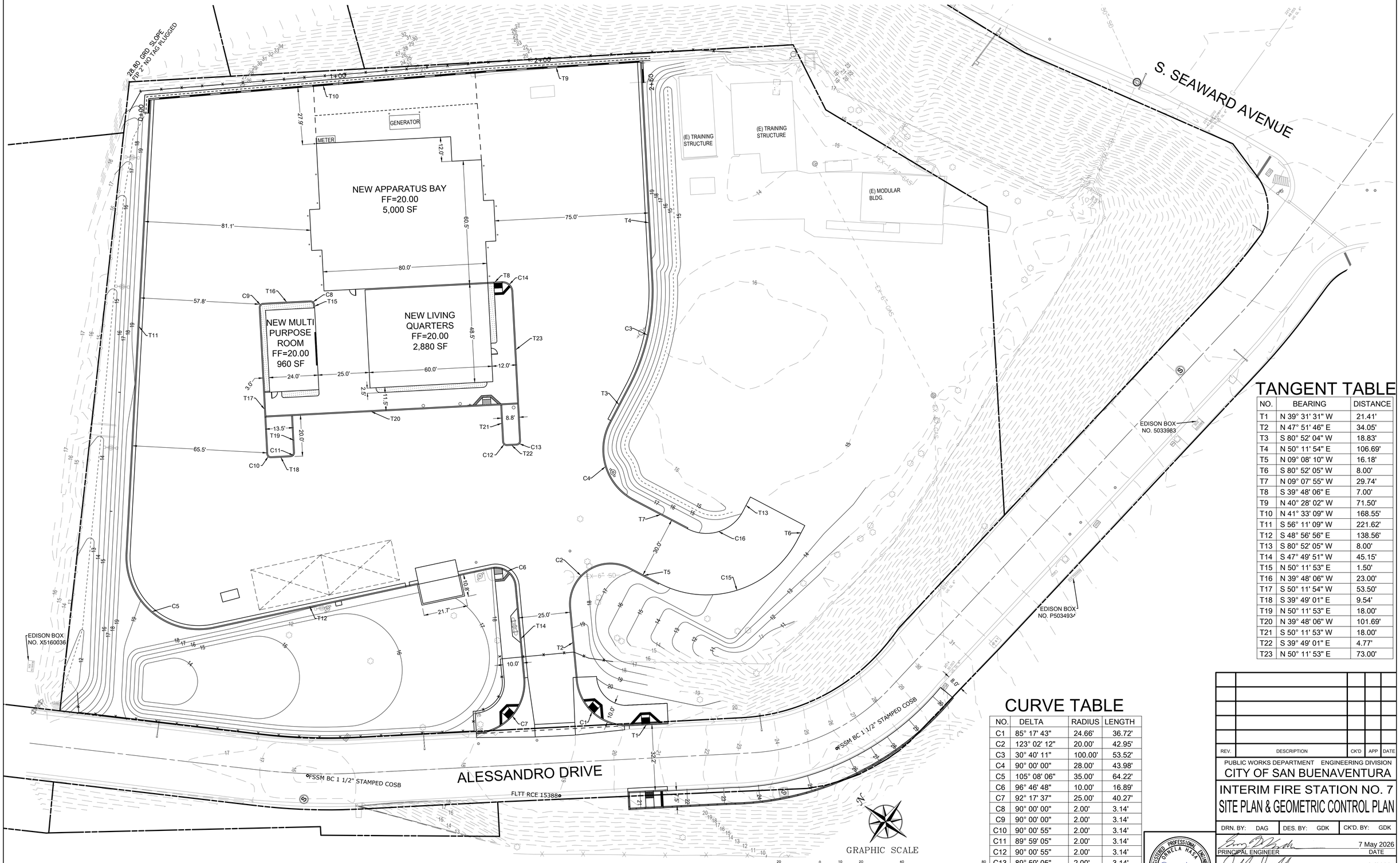

SITE AND GEOMETRIC CONTROL PLAN

SCALE: 1"=20'

TANGENT TABLE

NO.	BEARING	DISTANCE
T1	N 39° 31' 31" W	21.41'
T2	N 47° 51' 46" E	34.05'
T3	S 80° 52' 04" W	18.83'
T4	N 50° 11' 54" E	106.69'
T5	N 09° 08' 10" W	16.18'
T6	S 80° 52' 05" W	8.00'
T7	N 09° 07' 55" W	29.74'
T8	S 39° 48' 06" E	7.00'
T9	N 40° 28' 02" W	71.50'
T10	N 41° 33' 09" W	168.55'
T11	S 56° 11' 09" W	221.62'
T12	S 48° 56' 56" E	138.56'
T13	S 80° 52' 05" W	8.00'
T14	S 47° 49' 51" W	45.15'
T15	N 50° 11' 53" E	1.50'
T16	N 39° 48' 06" W	23.00'
T17	S 50° 11' 54" W	53.50'
T18	S 39° 49' 01" E	9.54'
T19	N 50° 11' 53" E	18.00'
T20	N 39° 48' 06" W	101.69'
T21	S 50° 11' 53" W	18.00'
T22	S 39° 49' 01" E	4.77'
T23	N 50° 11' 53" E	73.00'

CURVE TABLE

NO.	DELTA	RADIUS	LENGTH
C1	85° 17' 43"	24.66'	36.72'
C2	123° 02' 12"	20.00'	42.95'
C3	30° 40' 11"	100.00'	53.52'
C4	90° 00' 00"	28.00'	43.98'
C5	105° 08' 06"	35.00'	64.22'
C6	96° 46' 48"	10.00'	16.89'
C7	92° 17' 37"	25.00'	40.27'
C8	90° 00' 00"	2.00'	3.14'
C9	90° 00' 00"	2.00'	3.14'
C10	90° 00' 55"	2.00'	3.14'
C11	89° 59' 05"	2.00'	3.14'
C12	90° 00' 55"	2.00'	3.14'
C13	89° 59' 05"	2.00'	3.14'
C14	90° 00' 00"	5.00'	7.85'
C15	90° 00' 00"	50.00'	78.54'
C16	90° 00' 00"	20.00'	31.42'

REV.	DESCRIPTION	CK'D	APP	DATE

PUBLIC WORKS DEPARTMENT ENGINEERING DIVISION

CITY OF SAN BUENAVENTURA

INTERIM FIRE STATION NO. 7
SITE PLAN & GEOMETRIC CONTROL PLAN

DRN. BY: DAG | DES. BY: GDK | CK'D. BY: GDK

PRINCIPAL ENGINEER — DATE: 7 May 2026

CITY ENGINEER — DATE: 5/7/2026

REGISTERED PROFESSIONAL ENGINEER — DANIELA HASA — NO. 92225 — CIVIL — STATE OF CALIFORNIA

SPEC. NUMBER 2025-010 | PROJECT NUMBER FA11-1061

May 7, 2026 | SHEET 4 OF 151 | DWG. NO. 2025-D-010

CITY OF SAN BUENAVENTURA

PUBLIC WORKS DEPARTMENT - ENGINEERING DIVISION

INTERIM FIRE STATION NO. 7

GRADING AND IMPROVEMENT PLANS

2269 ALESSANDRO DR (APN 076-0-010-115)

OWNER / APPLICANT

CITY OF BUENAVENTURA
501 POLI STREET
VENTURA, CA 93001
PHONE: 805-658-4791
EMAIL: lliu@cityofventura.ca.gov

LOT AREA

CURRENT LOT AREA: 133,585 SF (3.0 AC)

TOPOGRAPHY DATE

CITY OF BUENAVENTURA, PUBLIC WORKS.

BENCHMARK DATA

BASIS OF BEARINGS: SOUTH 39° 45' 35" EAST ON THE CENTERLINE OF ALESSANDRO DRIVE IN FRONT OF THE SUBJECT PROPERTY DRIVEWAY, WAS USED FOR THIS SURVEY.

COORDINATE AND BEARING BASIS ARE NAD83 CALIFORNIA STATE PLANE, ZONE V, US FOOT, IN ACAD CIVIL 3D CODE CA83-VF, UTILIZING GNSS TOPNETLIVE NETWORK (LEWY) RTN (NAD83_NO_TRANS, GEOID12B) WITH VRS CORRECTIONS.

ALL SURVEY READINGS SHOWN HEREON ARE GRID DISTANCES, WITH ELEVATIONS TRANSLATED TO LOCAL NAVD 88 BENCHMARK DESIGNATION S-1100.

BOUNDARY, EASEMENTS AND RIGHT OF WAY LINES WERE COMPILED FROM RECORDED MAPS AND RELATED SURVEY MONUMENTS FOR THE IMMEDIATE PROJECT SITE. ALL LINES SHOWN HEREON ARE FOR INFORMATIONAL PURPOSES ONLY AND DO NOT REPRESENT OR DETERMINE A DEFINITIVE SURVEY BOUNDARY RESOLUTION.

BENCHMARK DATUM	MONUMENT DESCRIPTION
NAVD 1988 (VEN CO ADJ PUB 1992)	IN VENTURA, AT THE INTERSECTION OF THE SOUTHERN PACIFIC RAILROAD AND SEAWARD AVENUE, IN THE TOP AND 0.4 FOOT NORTHWEST OF THE SOUTHEAST END OF THE NORTHEAST CONCRETE CURB OF SEAWARD AVENUE OVERPASS, 7.0 FEET NORTHEAST OF THE NORTHEAST RAIL, 0.4 FOOT SOUTHEAST OF THE SOUTHEAST END OF THE SOUTHEAST END OF THE NORTHEAST STEEL RAIL, 55.1 FEET SOUTHEAST OF THE CENTER OF THE NORTHBOUND LANES OF SEAWARD AVENUE, AND ABOUT LEVEL WITH THE TRACK.
DESIGNATION	
S 1100 PID 1968	
ELEVATION	
80.11'	

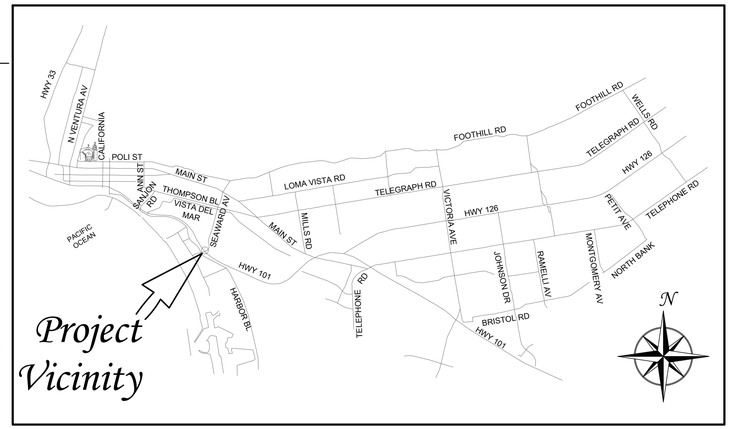

VICINITY MAP

NO SCALE

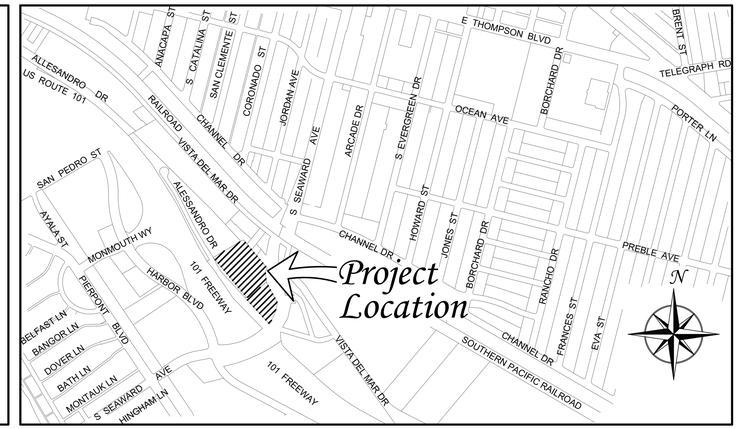

LOCATION MAP

NO SCALE

GENERAL NOTES

1. Utilities and facilities above and below the ground are located from the best available record information. the Contractor shall take due precautionary measures to protect the utilities or facilities shown on the plans from harm. Attention is directed to the possible existence of underground utilities or facilities not known to the City or in a location different from that which is shown on the plans. The Contractor shall take steps to ascertain the exact location of all underground utilities and facilities prior to doing work in order to avoid damage of such utility or facility or interfere with their service.
2. Survey monuments, property markers, and tie points shall be preserved, and referenced before construction and replaced after construction pursuant to Section 8771 of the Business and Professions Code.
3. Benchmark disks shall not be destroyed or disturbed until a replacement with a second order, class one, geodetic elevation has been accepted by the City Engineer.
4. All existing facilities shall be protected in place unless otherwise noted. any damage shall be repaired in-kind and at the contractor's expense and to the City's satisfaction.
5. No work shall be done in the SCRRA / METROLINK Railroad right-of-way prior to obtaining written permission from the Railroad and securing all necessary permits and approvals.

GRADING NOTES

1. All grading shall be in accordance with the City Ordinance No. 2017-009 and the latest revision thereto. Rough grading certification by the applicant's Civil Engineer, Soils Engineer and Engineering Geologist (where applicable) shall be submitted to the City Engineer for review and approval prior to authorizing issuance of building permits.
2. All work shall be done in accordance with the 2022 California Building Code as required by the San Buenaventura Municipal Code Chapter 12.115.
3. All work shall be done in accordance with the "GREENBOOK" Standard Specifications for Public Works Construction (SSPWC), 2021 Edition and the latest revisions thereto; and the City Standard Construction Details and the latest revisions thereto.
4. Recommendations and conclusions of the Soils Report No. 24-12-45 (APRIL 16, 2024), by EARTH SYSTEMS of VENTURA, CA (805) 642-6727 Letter No. 24-03-015, dated DEC. 16, 20 24, shall be thoroughly complied with. Both the mentioned report and letter are hereby appended and made a part of this grading plan.
5. Owner: CITY OF BUENAVENTURA Phone: (805) 677-3908
6. General Contractor (If available): _____ Phone: _____
7. Grading Contractor (A or C-12 License): _____ Phone: _____
8. Approximate date of start of grading: _____
   Approximate date of completion: _____
9. Cut: _____ CY Export: _____ CY Destination: _____
   Fill: 26,930 CY Import: _____ CY Source: _____
10. Water shall be available on the site at all times during grading operations to properly maintain dust control. Cleanup and Dust Control shall comply with Section 7-8.1 of the SSPWC.
11. Utilities and facilities above and below the ground are located from the best available record information. The Contractor shall take due precautionary measures to protect the utilities or facilities shown on the plans from harm. Attention is directed to possible existence of underground utilities or facilities not known to the City or in a location different from that, which is shown on the plans. The Contractor shall take steps to ascertain the exact location of all underground utilities and facilities prior to doing work in order to avoid damage of such utility or facility or to interfere with their service. Call Dig Alert, Toll Free at 811, two full working days in advance. California Government Code §4216
12. A separate plan check and permit must be obtained from the Building and Safety, for the construction of any and all retaining walls and PRIVATE sewer and water mains including service connections. The approvals of this plan by the City Engineer are not inclusive of the approval for the construction of any retaining walls and PRIVATE sewer and water mains including services connections.
13.
14. A City Encroachment Permit is required for any work within the public right-of-way.

    A Ventura County Watershed Protection District Permit is required for any work within a channel under their jurisdiction <if applicable>.
6.

   construction pursuant to Section 8771 of the State Business and Professions Code.
18. In order to mitigate the impacts on cultural resources or landscaping, if cultural material suggestive of prehistoric or historic origin is encountered, work in the vicinity of the find shall be stopped, and the

    until the find is evaluated and it is determined whether the material is archaeologically significant and
19. No cross lot drainage will be permitted without satisfactory storm water acceptance deed. All
20. Work hours shall be limited to Monday through Friday from 7:00 a.m. to 5:00 p.m. No work shall take place on Sundays or any legal or City observed holidays. The definition of work shall include running or idling equipment. Saturday work requires prior concurrence by the City Engineer. The planning commission and city council shall retain the right to impose more restrictive hours of construction upon any projects involving construction activity by adding appropriate conditions to the city's approval of subdivisions, planned development permits, conditional use permits, variances and other projects. SBMC 10.650.150.
21. Reconstruct any concrete curb, gutter, sidewalk and/or driveways per City standards damaged or defaced during construction. A City Encroachment Permit is required.
22. All grading excavations must be observed and approved by the project geotechnical engineering consultant prior to placement of any new engineered, compacted fill materials.
23. All foundation excavations must be observed and approved by the project geotechnical engineering consultant prior to placement of any reinforcing steel and/or concrete.

STORMWATER POLLUTION PREVENTION NOTES

24. The project shall comply with the requirements of the project Storm Water Pollution Control Plan or Storm Water Pollution Prevention Plan. Plan shall be onsite at all times.
25. Grading shall be undertaken in accordance with conditions and requirements of the Ventura Countywide Storm Water Quality Management Program (VCSQMP), National Pollutant Discharge Elimination System (NPDES) Permit No. CAS004002, and any other NPDES permit issued by the State of California Regional Water Quality Control Board. Incorporate Best Management Practices (BMPs) designed in accordance with the Ventura County Technical Guidance Manual for Stormwater Control Measures.
26. No direct storm water discharges from development will be allowed onto City streets or the public storm drain system without treatment by an approved storm water pollution prevention device located on private property. Maintenance of the private storm water pollution prevention devices shall be the sole responsibility of the owner. Discharges or connection without treatment by an approved storm water pollution prevention device shall be considered in violation of the above referenced permit and the City's Stormwater Ordinance.

UTILITIES/SERVICES

WATER:	VENTURA WATER 336 SAN JON RD VENTURA, CA 93001 (805)652-4505	GAS:	SO. CALIFORNIA GAS CO. 9400 OAKDALE AVE CHATSWORTH, CA 91313 (818)701-3319
SEWER:	VENTURA WATER 1400 SPINNAKER DR VENTURA, CA 93001 (805)677-4118	TELEPHONE:	AT&T 1264 CALLENS RD VENTURA, CA 93003 (805)639-0540
STORM DRAIN:	VENTURA PUBLIC WORKS 336 SANJON RD VENTURA, CA 93001 (805)652-4521	CABLE TV:	TIME WARNER 2525 KNOLL DR VENTURA, CA 93003 (805)477-4439
ELECTRIC:	SO. CALIFORNIA EDISON CO. 10060 TELEGRAPH RD VENTURA, CA 93004 (805)654-7476	CABLE TV:	CHARTER CABLE 51 W. MAIN ST VENTURA, CA 93001 (805)648-5705

ABBREVIATIONS

AC	ASPHALTIC CONCRETE
CONST	CONSTRUCTION
CB	CATCH BASIN
DI	STORM DRAIN INLET
DIA	DIAMETER
DW	DOMESTIC WATER
EG	EDGE OF GUTTER
EP	EDGE OF PAVEMENT
EX	EXISTING
FF	FINISHED FLOOR
FG	FINISHED GRADE
FL	FLOW LINE
FS	FINISHED SURFACE
FW	FIRE WATER
HDPE	HIGH DENSITY POLYETHYLENE
MH	MANHOLE
OG	ORIGINAL GROUND
P/L	PROPERTY LINE
PP	POWER POLE
PVC	POLYVINYL CHLORIDE
PVMT	PAVEMENT
RCP	REINFORCED CONCRETE PIPE
R/W	RIGHT OF WAY
SD	STORM DRAIN
SS	SANITARY SEWER
STD	STANDARD
TBM	TEMPORARY BENCH MARK
TC	TOP OF CURB
TG	TOP OF GRATE
TW	TOP OF WALL
W	WATER

SYMBOLS

- SANITARY SEWER MANHOLE
- TELEPHONE MANHOLE
- FIRE HYDRANT
- WATER VALVE
- WATER METER
- POWER POLE
- —S— SANITARY SEWER LINE
- —W— WATER LINE
- —SD— STORM DRAIN
- —w— EX. WATER LINE
- —s— EX. SEWER LINE
- —t— EX. TELECOM LINE
- —g— EX. GAS LINE

UNDERGROUND SERVICE ALERT
CALLTHREE WORKING DAYS
BEFORE YOU DIG:

811
Know what's below.
Call before you dig.

REGISTERED PROFESSIONAL ENGINEER
DANIELA HASA
NO. 92225
CIVIL
STATE OF CALIFORNIA

REV.	DESCRIPTION	CK'D	APP	DATE

PUBLIC WORKS DEPARTMENT ENGINEERING DIVISION

CITY OF SAN BUENAVENTURA

INTERIM FIRE STATION NO. 7

GRADING AND IMPROVEMENTS COVER SHEET

DRN. BY: DAG	DES. BY: GDK	CK'D. BY: GDK

PRINCIPAL ENGINEER — DATE: 5 May 2026

CITY ENGINEER — DATE: 5/7/2026

SPEC. NUMBER 2025-010 | PROJECT NUMBER FA11-1061

April 28, 2026 | SHEET 5 OF 151 | DWG. NO. 2025-D-010

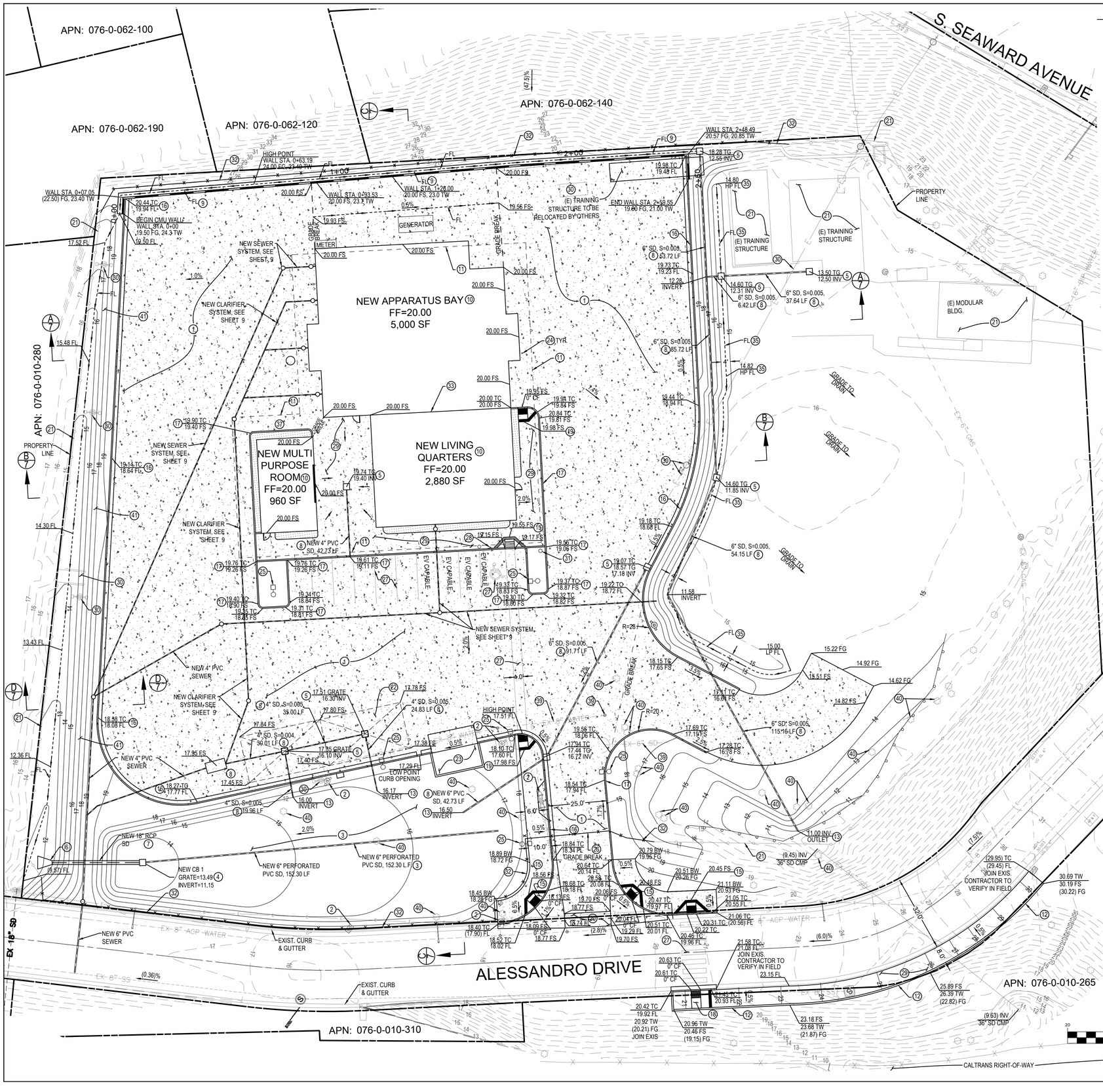

CONSTRUCTION NOTES

1. THE CONTRACTOR SHALL REMOVE ALL ASPHALT CONCRETE, AND CONCRETE PAVEMENT AND CONSTRUCT A NEW PAVED SURFACE PER THESE PLANS AND THE SPECIFICATIONS, AND PER CROSS SECTION SHOWN ON SHEET 7. THE NEW PAVED SURFACE SHALL BE 8-INCHES OF PCC, OVER 8-INCHES OF AGGREGATE BASE MATERIAL PER DETAIL SHOWN ON SHEET 8, AND IN CONFORMANCE WITH THE GEOTECHNICAL REPORT, ATTACHED IN THE APPENDIX.
2. THE CONTRACTOR SHALL ADJUST ALL VISIBLE/NON-VISIBLE MANHOLES, VALVES, SURVEY MONUMENTS, FIRE HYDRANTS AND SUBSTRUCTURES TO THE PROPOSED FINISH GRADE PER THESE PLANS AND THE SPECIFICATIONS.
3. THE CONTRACTOR SHALL CONSTRUCT A NEW BIO-RETENTION FACILITY PER THESE PLANS AND THE SPECIFICATIONS, AND PER DETAIL SHOWN ON SHEET 12.
4. THE CONTRACTOR SHALL CONSTRUCT A NEW CATCH BASIN WITH PIPE PER THESE PLANS AND THESE SPECIFICATIONS AND PER PLAN SHEETS 8. THE NEW CATCH BASIN SHALL BE THE PRECAST CONCRETE 24"X24", STANDARD CATCH BASIN WITH GALVANIZED STEEL TRAFFIC RATED FRAME AND GRATE, BY PRECON PRODUCTS, OR APPROVED EQUAL.
5. THE CONTRACTOR SHALL CONSTRUCT A NEW CATCH BASIN WITH PIPE PER THESE PLANS AND THESE SPECIFICATIONS AND PER PLAN SHEETS 8 AND 11. THE NEW CATCH BASIN SHALL BE THE PRECAST CONCRETE 12"X12", STANDARD CATCH BASIN WITH GALVANIZED STEEL TRAFFIC RATED FRAME AND GRATE, BY PRECON PRODUCTS, OR APPROVED EQUAL.
6. THE CONTRACTOR SHALL CONSTRUCT A NEW CALTRANS D94A METAL FLARED, TYPE A, END SECTION, WITH PROTECTION RIP RAP, PER PLAN AND PER THE SPECIFICATIONS, AND PER DETAIL SHOWN IN SHEET 8.
7. THE CONTRACTOR SHALL CONSTRUCT THE NEW STORM DRAIN PIPE PER PLAN AND PER THE SPECIFICATIONS, AND PER DETAIL SHOWN ON SHEET 8. THE NEW STORM DRAIN PIPE SHALL BE RCP, CLASS III, AND SHALL CONFORM TO ASTM C990, ASTM C76 AND ASTM C443, OR APPROVED EQUAL.
8. THE CONTRACTOR SHALL CONSTRUCT THE NEW STORM DRAIN PIPE PER PLAN AND PER THE SPECIFICATIONS, AND PER DETAIL SHOWN ON SHEET 8. THE NEW STORM DRAIN PIPE SHALL BE PVC, SDR 35, (PS46) WITH RUBBER RING JOINTS PER ASTM D3034 AND ASTM F679, OR APPROVED EQUAL.
9. THE CONTRACTOR SHALL REMOVE DRY STACK BRICK WALL AND CONSTRUCT THE NEW CONCRETE MASONRY UNIT WALL WITH V DITCH, PER PLAN AND PER THE SPECIFICATIONS AND PER DETAIL SHOWN ON SHEET 8. RETAINING WALL PER SEPARATE PERMIT.
10. THE CONTRACTOR SHALL COORDINATE THE DELIVERY, STAGING, INSTALLATION, UTILITY CONNECTION, FOR THE NEW APPARATUS BAY, LIVING QUARTERS, AND GYM STRUCTURES WITH THE VENDOR, PER THESE PLANS AND THE SPECIFICATIONS. EXCAVATION SHALL CONFORM TO THE RECOMMENDATIONS STATED IN THE GEOTECHNICAL REPORT ATTACHED IN THE APPENDIX OF THE SPECIFICATIONS, AND PER DETAILS SHEET 7.
11. THE CONTRACTOR SHALL PROVIDE SUBGRADE STABILIZATION, PER THESE PLANS AND THE SPECIFICATIONS, AND PER DETAIL SHOWN ON SHEETS 7. SUBGRADE STABILIZATION SHALL CONFORM TO THE RECOMMENDATIONS STATED IN THE GEOTECHNICAL REPORT ATTACHED IN THE APPENDIX OF THE SPECIFICATIONS.
12. THE CONTRACTOR SHALL CONSTRUCT THE NEW CONCRETE MASONRY UNIT WALL, PER PLAN AND PER THE SPECIFICATIONS, AND PER DETAIL SHOWN ON SHEET 8.
13. THE CONTRACTOR SHALL CONSTRUCT PROTECTION RIP RAP, PER PLAN AND PER THE SPECIFICATIONS, AND PER DETAIL SHOWN IN SHEET 8.
14. THE CONTRACTOR SHALL PROTECT ALL EXISTING UTILITY LINES. THE CONTRACTOR SHALL POT HOLE EXISTING UTILITIES SHOWN HEREON OR MARKED BY USA IN THE FIELD TO VERIFY LINE LOCATION AND INVERTS PRIOR TO TRENCHING AND EXCAVATION OPERATIONS.
15. THE CONTRACTOR SHALL CONSTRUCT A CURB RAMP, PER THESE PLANS AND THE SPECIFICATIONS AND PER SSPWC STANDARD PLAN 111-4, CASE A, TYPE 1, OVER 6-INCHES OF PMB. THE CONTRACTOR SHALL CONSTRUCT A 1-FOOT WIDE GROOVE GRADE WARNING STRIP AT THE TOP OF THE PROPOSED CURB RAMP, PER SSPWC STANDARD PLAN 111-4.
16. THE CONTRACTOR SHALL CONSTRUCT CONCRETE CURB AND GUTTER, (TYPE A), PER THESE PLANS AND THE SPECIFICATIONS AND PER CITY OF VENTURA STD. DETAIL 107 AS SHOWN ON SHEET 15.
17. THE CONTRACTOR SHALL CONSTRUCT CONCRETE CURB ONLY PER THESE PLANS AND THE SPECIFICATIONS AND PER CITY OF VENTURA STD. DETAIL 107 AS SHOWN ON SHEET 15.
18. THE CONTRACTOR SHALL CONSTRUCT A CURB RAMP, PER THESE PLANS AND THE SPECIFICATIONS AND PER SSPWC STANDARD PLAN 111-4, CASE B, TYPE 1, OVER 6-INCHES OF PMB. THE CONTRACTOR SHALL CONSTRUCT A 1-FOOT WIDE GROOVE GRADE WARNING STRIP AT THE TOP OF THE PROPOSED CURB RAMP, PER SSPWC STANDARD PLAN 111-4.
19. THE CONTRACTOR SHALL CONSTRUCT A CURB RAMP, PER THESE PLANS AND THE SPECIFICATIONS AND PER SSPWC STANDARD PLAN 111-4, CASE D, TYPE 2, OVER 6-INCHES OF PMB. THE CONTRACTOR SHALL CONSTRUCT A 1-FOOT WIDE GROOVE GRADE WARNING STRIP AT THE TOP OF THE PROPOSED CURB RAMP, PER SSPWC STANDARD PLAN 111-4.
20. THE CONTRACTOR SHALL REMOVE AND RECONSTRUCT CONCRETE CROSS GUTTER, PER THESE PLANS AND THE SPECIFICATIONS AND PER CITY OF VENTURA STD. DETAIL 101 AS SHOWN ON SHEET 15.
21. THE CONTRACTOR SHALL PROTECT EXISTING IMPROVEMENTS, PER PLAN AND THE SPECIFICATIONS.
22. ALL SEWER AND WATER LINES SHALL BE INSTALLED AS DEPTHS AS INDICATED ON THE PLANS AND PER CITY OF VENTURA STANDARDS. DEEPEN UNDERGROUND ELECTRICAL AND LOW VOLTAGE CONDUITS ARE REQUIRED TO ACHIEVE REQUIRED SEPARATION BETWEEN WET AND DRY UTILITIES AT CROSSINGS.
23. THE CONTRACTOR SHALL CONSTRUCT A TRASH ENCLOSURE, PER PLAN AND THE SPECIFICATIONS, AND PER DETAILS SHOWN ON SHEET 13.
24. THE CONTRACTOR SHALL CONSTRUCT PIPE BOLLARDS, PER THESE PLANS AND THE SPECIFICATIONS. PIPE BOLLARDS SHALL BE THE 6" X 42" BOLT DOWN BOLLARD BY POST GUARD, OR APPROVED EQUAL. PIPE BOLLARD MINIMUM WALL THICKNESS SHALL BE SCHEDULE 40, AND SHALL BE FURNISHED WITH 5/8" X 4" CONCRETE ANCHOR BOLTS, AND A MINIMUM 6" BASE COVER. PUBLIC WORKS INSPECTOR SHALL VERIFY PIPE BOLLARD LOCATION PRIOR TO CONSTRUCTION.
25. THE CONTRACTOR SHALL CONSTRUCT WALKWAY LIGHTING, PER PLAN AND THE SPECIFICATIONS, AND PER DETAIL AS SHOWN ON SHEET 14. THE WALKWAY LIGHTING FIXTURES SHALL BE THE VSS-1-T4-32L-1-40K BY US POLE CO., OR APPROVED EQUAL.
26. THE CONTRACTOR SHALL SHALL REMOVE AND RECONSTRUCT THE GATE SYSTEM, PER PLAN AND THE SPECIFICATIONS, AND PER DETAILS SHOWN ON SHEET 18.
27. THE CONTRACTOR SHALL STRIPE NEW CROSSWALK, PARKING STALLS, ADA PARKING STALL PARKING PER PLAN AND THE SPECIFICATIONS, AND PER DETAIL SHOWN ON SHEET 17. CROSSWALK STRIPING SHALL BE PER CALTRANS STANDARD A24F, 2-FOOT STRIPE, 2-FOOT GAP, CONTINENTAL. PARKING STALL SHALL BE 4-INCHES WIDE WHITE PAINT. ADA PARKING STALL SHALL BE PER CALTRANS STANDARD A90A DOUBLE PARKING STALL.
28. THE CONTRACTOR SHALL INSTALL ADA PARKING SIGNS PER PLAN AND THE SPECIFICATIONS. THE ADA SIGNS SHALL BE THE CALTRANS STANDARD R99 AND R99B.
29. THE CONTRACTOR SHALL CONSTRUCT NEW SIDEWALK, PER THESE PLANS AND THE SPECIFICATIONS, AND PER STANDARD DETAIL SHOWN ON SHEET 15.
30. THE CONTRACTOR SHALL REMOVE THE EXISTING POWER POLE, POWER LINE, POLE FOOTING, GUY WIRE, CONCRETE WALKWAY, STEEL RAIL, LIGHT FOOTING, LIGHT POLE AND FIXTURE, CHAIN LINK FENCE, AND FOOTING, CONCRETE VAULTS, PER THESE PLANS AND THE SPECIFICATIONS.
31. THE CONTRACTOR SHALL CONSTRUCT A FLAGPOLE AND CONCRETE FOOTING, PER THESE PLANS AND THE SPECIFICATIONS, AND PER DETAIL SHEET 18. THE FLAG POLE SHALL BE CONSTRUCTED OF ALUMINUM ALLOY 6063 GRADE, WITH A SATIN ALUMINUM FINISH. THE CITY ENGINEER WILL VERIFY THE LOCATION OF THE NEW FLAGPOLE PRIOR TO CONSTRUCTION.
32. THE CONTRACTOR SHALL CONSTRUCT GALVANIZED CHAIN LINK FENCE, AND CONCRETE FOOTING, PER THESE PLANS AND THE SPECIFICATIONS, AND PER DETAIL SHEET 18.
33. THE CONTRACTOR SHALL JOIN BOTH STRUCTURES, APPARATUS BAY AND LIVING QUARTERS, PER PLAN AND THE SPECIFICATIONS, AND PER SEISMIC JOINT DETAILS SHOWN ON SHEET 18.
34. THE CONTRACTOR SHALL STUB END PLUG FUTURE DUAL-PORT POWER SHARE EV CHARGER CONDUIT WITH ROUND MANHOLE COVER AND FRAME, PER PLAN AND THE SPECIFICATIONS. THE MANHOLE COVER SHALL BE 8-INCH DIAMETER, BOLT DOWN WITH GASKET, MINIMUM 6-INCH SKIRT LENGTH/DEPTH, R-8X6-BD, BY MANHOLE COVERS DIRECT, OR APPROVED EQUAL. CITY ENGINEER SHALL VERIFY THE CONDUIT END LOCATION PRIOR TO CONSTRUCTION.
35. THE CONTRACTOR SHALL GRADE NEW EARTH SWALE, PER PLAN AND THE SPECIFICATIONS.
36. THE CONTRACTOR SHALL PROTECT ALL EXISTING UTILITY LINES. THE CONTRACTOR SHALL POT HOLE EXISTING UTILITIES SHOWN HEREON, OR MARKED BY USA IN THE FIELD TO VERIFY LINE LOCATIONS AND INVERTS BEFORE TRENCHING AND EXCAVATION OPERATIONS.
37. NOT USED
38. IT SHALL BE THE CONTRACTORS RESPONSIBILITY TO REVIEW AND FAMILIARIZE CITY OF VENTURA RECORD DRAWINGS 1949-D-012, 1957-D-023, 1965-D-078, 1979-D-011, 1994-D-028 AND 2003-D-010, AND ALL OTHER RECORDS PRIOR TO CONSTRUCTION.
39. THE CONTRACTOR SHALL ABANDON EXISTING UTILITIES AND APPURTENANCES AND INSTALL PLUG PER PLAN AND THE SPECIFICATIONS.
40. THE CONTRACTOR SHALL REMOVE THE EXISTING TREES, AND TREE STUMP, PER PLAN AND PER THE SPECIFICATIONS, AND AS APPROVED BY THE PUBLIC WORKS ENGINEERING DURING CONSTRUCTION. THE APPROVAL SHALL BE MADE SOON AFTER OR DURING CONSTRUCTION OPERATIONS AND WHEN THE CITY'S ARBORIST DETERMINATION OF THE TREES HEALTH CONDITION. THE EXISTING TREES VARY IN SIZE, FROM 5-INCHES TO 24-INCHES TRUNK DIAMETER.
41. THE CONTRACTOR SHALL RESTORE DRAINAGE DITCH, PER PLAN AND THE SPECIFICATIONS, AND PER CROSS SECTION D-D SHWON ON SHEET 7. THE CONTRACTOR SHALL LEVEL OUT CUTS/FILLS TO THE EX. GROUND BY GRADING THE DISTURBED GROUND TO THE GRADES SHOWN ON PLANS.

ABBREVIATIONS

B.W.	BACK OF WALK
C.B.	CATCH BASIN
F.F.	FINISHED FLOOR
F.G.	FINISHED GRADE
F.L.	FLOWLINE
F.S.	FINISHED SURFACE
G.B.	GRADE BREAK
H.P.	HIGH POINT
L.P.	LOW POINT
W.W.M.	WELDED WIRE MESH

LEGEND

- PROPOSED UTILITY LINES
- DAYLIGHT
- CHAINLINK FENCE
- PROPOSED RETAINING WALL
- FLOWLINE
- STREET CENTERLINE
- DAYLIGHT LINE
- CONCRETE PAVEMENT
- LANDSCAPE AREA

REV.	DESCRIPTION	CK'D	APP	DATE

PUBLIC WORKS DEPARTMENT ENGINEERING DIVISION

CITY OF SAN BUENAVENTURA

INTERIM FIRE STATION NO. 7
GRADING AND DRAINAGE PLAN

DRN. BY: DAG	DES. BY: GDK	CK'D. BY: GDK

REGISTERED PROFESSIONAL ENGINEER — DANIELA HASA — NO. 92225 — CIVIL — STATE OF CALIFORNIA

5 May 2026
PRINCIPAL ENGINEER DATE

5/7/2026
CITY ENGINEER DATE

SPEC. NUMBER 2025-010	PROJECT NUMBER FA11-1061
April 28, 2026	SHEET 6 OF 151 | DWG. NO. 2025-D-010

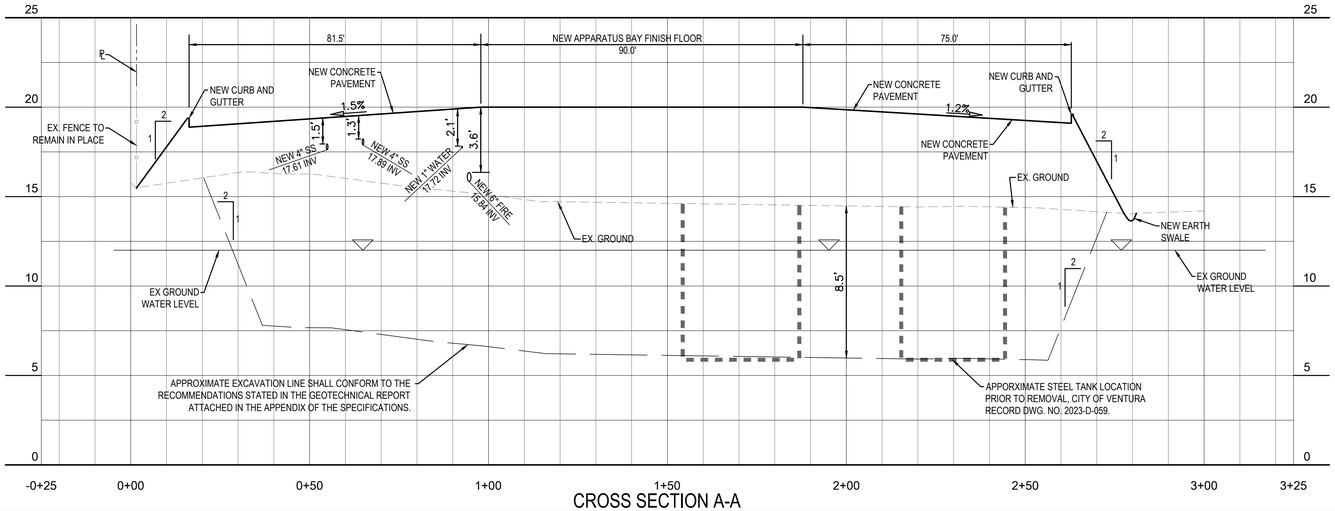

CROSS SECTION A-A

SCALE: HORIZONTAL 1"=20', VERTICAL 1"=4'

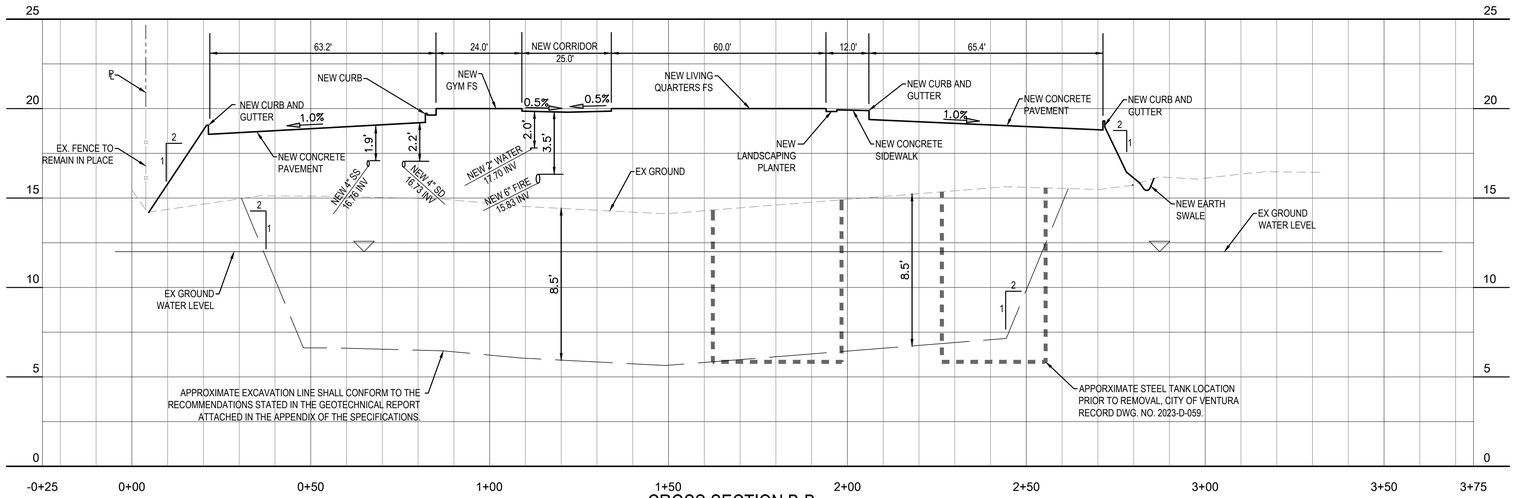

CROSS SECTION B-B

SCALE: HORIZONTAL 1"=20', VERTICAL 1"=4'

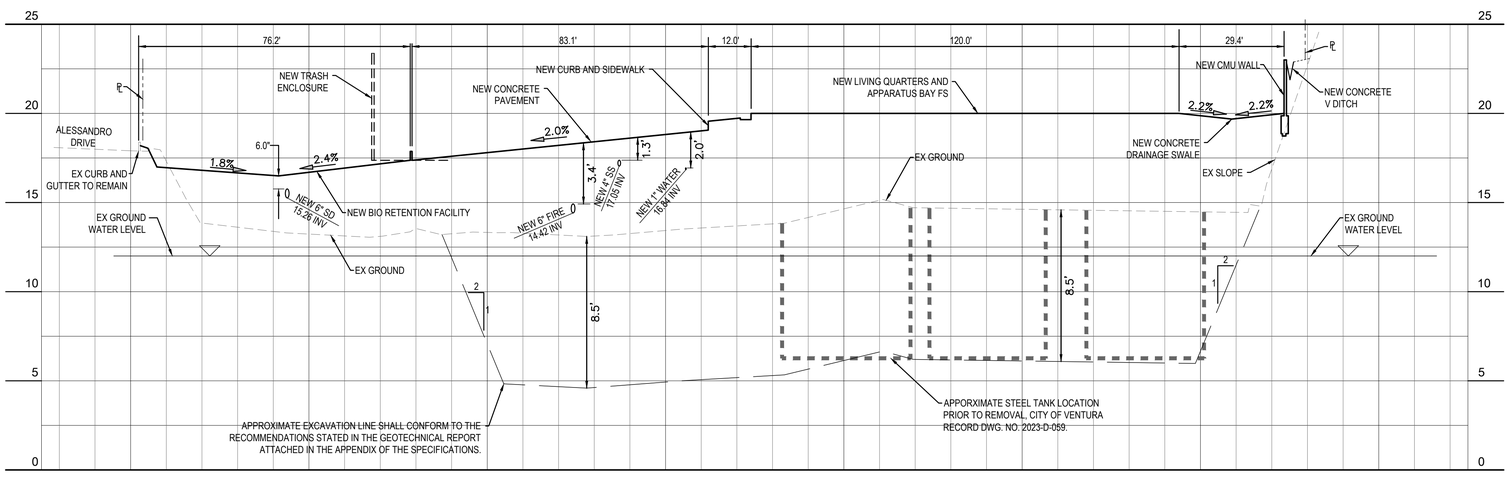

CROSS SECTION C-C

SCALE: HORIZONTAL 1"=20', VERTICAL 1"=4'

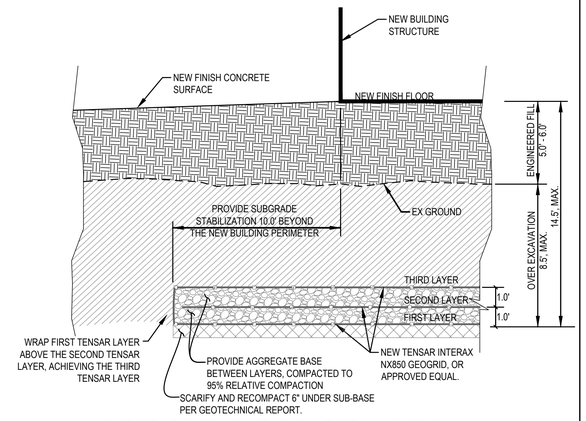

SUBGRADE STABILIZATION DETAIL, TYPICAL

SCALE: NOT TO SCALE

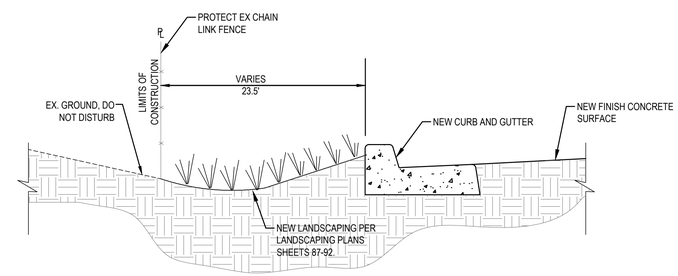

CROSS SECTION D-D

SCALE: NOT TO SCALE

REV.	DESCRIPTION	CK'D	APP	DATE

PUBLIC WORKS DEPARTMENT ENGINEERING DIVISION

CITY OF SAN BUENAVENTURA

INTERIM FIRE STATION NO. 7

SITE CROSS SECTIONS

DRN. BY: DAG | DES. BY: GDK | CK'D. BY: GDK

PRINCIPAL ENGINEER — DATE: 5 May 2026

CITY ENGINEER — DATE: 5/7/2026

REGISTERED PROFESSIONAL ENGINEER — GRAHAM DAVID KIRKELA — NO. 92225 — CIVIL — STATE OF CALIFORNIA

SPEC. NUMBER 2025-010 | PROJECT NUMBER FA11-1061

April 28, 2026 | SHEET 7 OF 151 | DWG. NO. 2025-D-010

CONCRETE MASONRY RETAINING WALL GENERAL NOTES:

1. CONCRETE SHALL BE 2,500 p.s.i. MINIMUM @ 28 DAYS.
2. REINFORCED STEEL SHALL BE PER ASTM.A615, GRADE 60, MINIMUM fs=20,000 p.s.i.
3. REINFORCED STEEL LAPS MINIMUM 24.0".
4. CONCRETE MASONRY UNITS SHALL BE PER ASTM C90, CONCRETE BLOCKS, GRADE "A".
5. GROUT SHALL BE 1 PART CEMENT, 2 PARTS SAND, 2 PARTS PEA GRAVEL, 1,800 p.s.i. @ 28 DAYS.
6. MORTAR SHALL BY TYPE ASTM C270, TYPE "S".
7. SOIL SHALL BE MINIMUM 1,500 p.s.f. BEARING PRESSURE.
8. BACKFILL SHALL BE COHESIONLESS SOIL.
9. ALL WORKMANSHIP AND MATERIALS TO CONFORM WITH THE C.B.C.

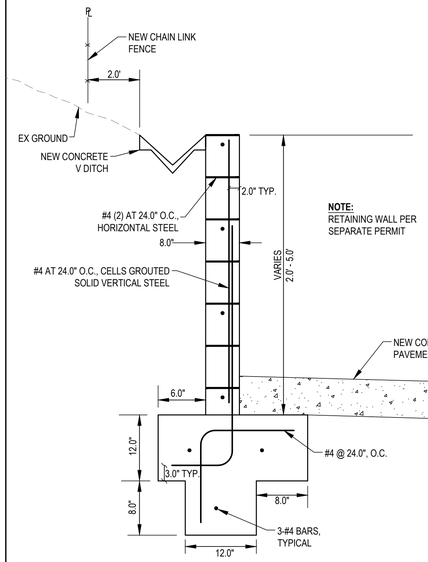

CONCRETE MASONRY UNIT RETAINING WALL

SCALE: NOT TO SCALE

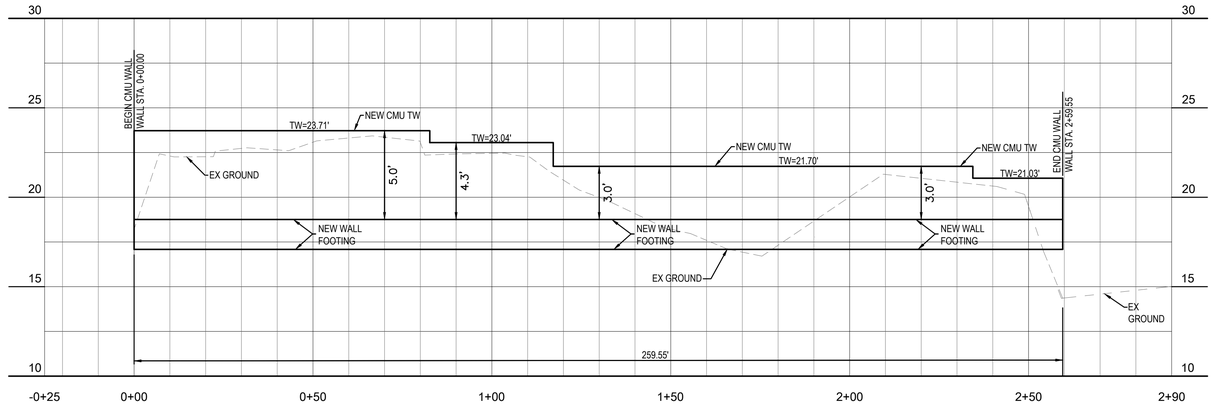

RETAINING WALL AND WALL FOOTING PROFILE

SCALE: HORIZONTAL 1"=20', VERTICAL 1"=4'

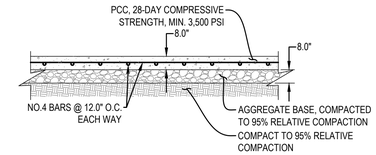

PAVEMENT SECTION THROUGHOUT SITE, TYPICAL

NOT TO SCALE

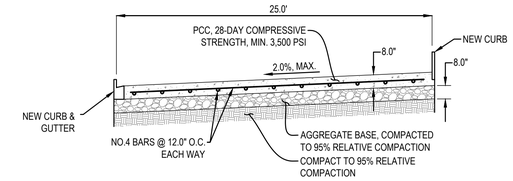

PAVEMENT SECTION AT ENTRANCE, TYPICAL

NOT TO SCALE

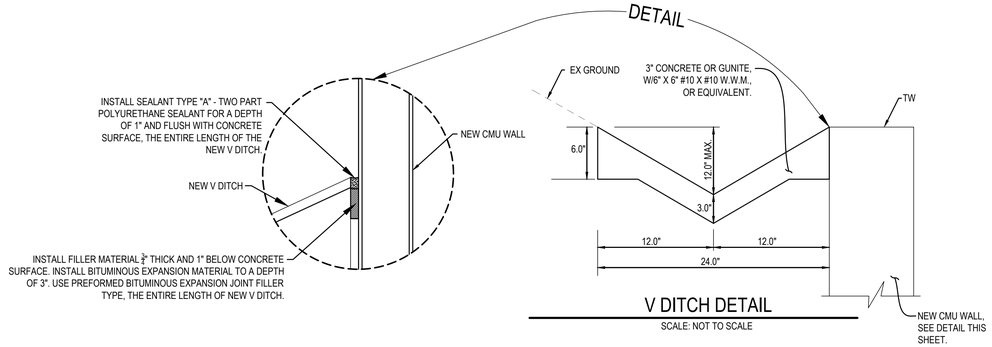

V DITCH DETAIL

SCALE: NOT TO SCALE

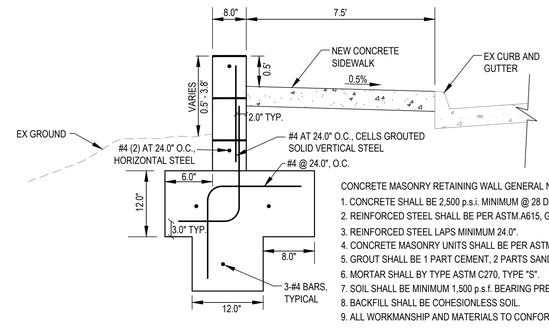

CONCRETE MASONRY RETAINING WALL GENERAL NOTES:

1. CONCRETE SHALL BE 2,500 p.s.i. MINIMUM @ 28 DAYS.
2. REINFORCED STEEL SHALL BE PER ASTM.A615, GRADE 60, MINIMUM fs=20,000 p.s.i.
3. REINFORCED STEEL LAPS MINIMUM 24.0".
4. CONCRETE MASONRY UNITS SHALL BE PER ASTM C90, CONCRETE BLOCKS, GRADE "A".
5. GROUT SHALL BE 1 PART CEMENT, 2 PARTS SAND, 2 PARTS PEA GRAVEL, 1,800 p.s.i. @ 28 DAYS.
6. MORTAR SHALL BY TYPE ASTM C270, TYPE "S".
7. SOIL SHALL BE MINIMUM 1,500 p.s.f. BEARING PRESSURE.
8. BACKFILL SHALL BE COHESIONLESS SOIL.
9. ALL WORKMANSHIP AND MATERIALS TO CONFORM WITH THE C.B.C.

ALESSANDRO DRIVE SIDEWALK RETAINING WALL DETAIL

SCALE: NOT TO SCALE

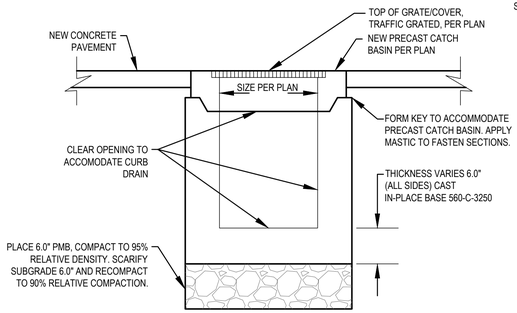

NEW CATCH BASIN DETAIL

NOT TO SCALE

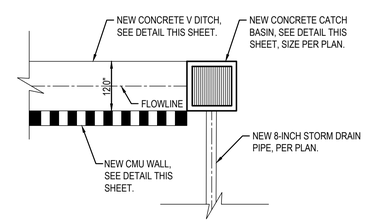

V DITCH, CMU WALL, AND CATCH BASIN DETAIL

SCALE: NOT TO SCALE

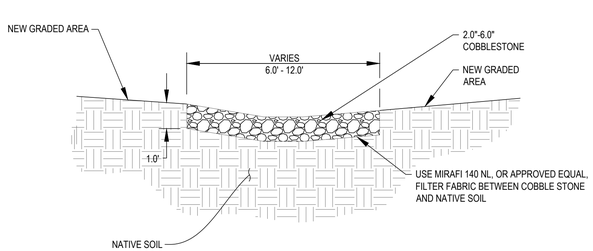

COBBLE STONE DETAIL

NOT TO SCALE

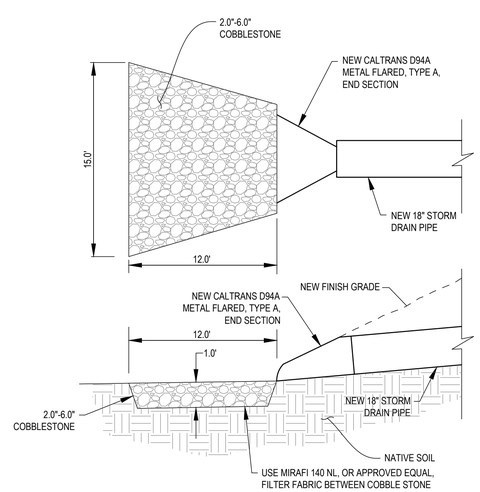

METAL FLARED END SECTION WITH COBBLESTONE DETAIL

NOT TO SCALE

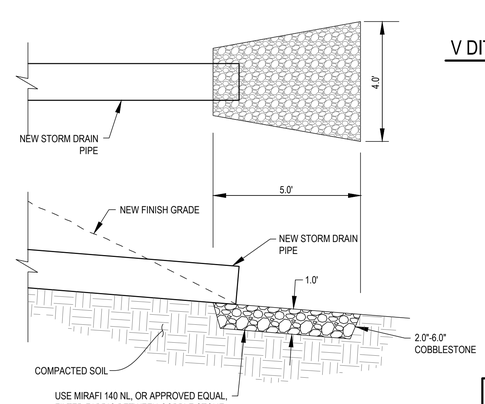

PROTECTION RIP RAP DETAIL

NOT TO SCALE

REV.	DESCRIPTION	CK'D	APP	DATE

PUBLIC WORKS DEPARTMENT ENGINEERING DIVISION

CITY OF SAN BUENAVENTURA

INTERIM FIRE STATION NO. 7

GRADING AND DRAINAGE DETAILS

DRN. BY: DAG | DES. BY: GDK | CK'D. BY: GDK

PRINCIPAL ENGINEER — DATE: 5 May 2026

CITY ENGINEER — DATE: 5/7/2026

REGISTERED PROFESSIONAL ENGINEER — DANIELA HASA — NO. 60226 — CIVIL — STATE OF CALIFORNIA

SPEC. NUMBER 2025-010 | PROJECT NUMBER FA11-1061

April 29, 2026 | SHEET 8 OF 151 | DWG. NO. 2025-D-010

WATER CONSTRUCTION NOTES

1. THE CONTRACTOR SHALL CONSTRUCT THE NEW DOMESTIC WATER SERVICE, PER PLAN AND THE SPECIFICATIONS, AND PER CITY STANDARD DETAILS 009, AND 010 AS SHOWN ON SHEET 16.THE NEW DOMESTIC WATER SERVICE LATERAL SHALL BE 1.0" HDPE PER WATER SERVICE CONNECTION GENERAL NOTES AS SHOWN ON SHEET 16. THE CONTRACTOR SHALL USE ANGLE FITTINGS, VERTICALLY AND HORIZONTALLY WITHIN THE PIPE MANUFACTURE'S RECOMMENDED JOINT DEFLECTION LIMITS AND SPECIFICATIONS TO AVOID INTERFERING UTILITY CONFLICTS AND CROSSINGS. ALL ELBOW FITTINGS SHALL BE 1.0" HDPE PER THE SERVICE CONNECTION GENERAL NOTES AS SHOWN ON SHEET 12, OR APPROVED EQUAL. THE CONTRACTOR SHALL CONNECT THE NEW WATERLINE SERVICE LATERAL TO THE EXISTING WATERLINE MAIN. THE CONTRACTOR SHALL NOTIFY AND COORDINATE WITH THE CITY PUBLIC WORKS INSPECTOR AT LEAST SEVEN (7) CALENDAR DAYS BEFORE THE DATE OF CONNECTION. THE NEW DOMESTIC WATER SERVICE METER, METER BOX SHALL BE CONSTRUCTED BY VENTURA WATER. THE WATER SERVICE LATERAL TRENCH BACKFILL SHALL BE PER CITY STANDARD DETAIL NO. 112 AS SHOWN ON SHEET 17.
2. THE CONTRACTOR SHALL CONSTRUCT A NEW DOMESTIC WATER SERVICE LINE VALVE BOX WITH LID AND BALL VALVE, PER PLAN AND THE SPECIFICATIONS. THE VALVE BOX AND LID SHALL BE THE CHRISTY G05, BY OLDCASTLE PRECAST, OR APPROVED EQUAL.
3. THE CONTRACTOR SHALL COORDINATE SERVICE CONNECTIONS WITH BUILDING MANUFACTURER AND PUBLIC WORKS CITY ENGINEER PRIOR TO CONSTRUCTION.
4. THE CONTRACTOR SHALL CONSTRUCT THE NEW FIRE LINE, PER PLAN AND THE SPECIFICATIONS, AND PER CITY STANDARD DETAILS 009, AND 010 AS SHOWN ON SHEET 16.THE NEW FIRE LINE SHALL BE 6.0" SCHEDULE 40 STEEL WITH GROOVED ENDS, AND PER DETAIL SHOWN ON SHEET 16. THE CONTRACTOR SHALL USE ANGLE FITTINGS, VERTICALLY AND HORIZONTALLY WITHIN THE PIPE MANUFACTURE'S RECOMMENDED JOINT DEFLECTION LIMITS AND SPECIFICATIONS TO AVOID INTERFERING UTILITY CONFLICTS AND CROSSINGS. ALL ELBOW FITTINGS SHALL BE STEEL SCHEDULE 40. THE CONTRACTOR SHALL CONNECT THE NEW FIRE LINE TO THE EXISTING WATERLINE MAIN. THE CONTRACTOR SHALL NOTIFY AND COORDINATE WITH THE CITY PUBLIC WORKS INSPECTOR AT LEAST SEVEN (7) CALENDAR DAYS BEFORE THE DATE OF CONNECTION. THE NEW FIRE LINE TRENCH BACKFILL SHALL BE PER CITY STANDARD DETAIL NO. 112 AS SHOWN ON SHEET 17.
5. THE CONTRACTOR SHALL INSTALL A 12-INCH LONG SOLID COUPLING WITH LOCKING RETAINING GLAND, PER PLAN AND THE SPECIFICATIONS.
6. THE CONTRACTOR SHALL INSTALL GATE VALVE WITH LOCKING RETAINER GLAND AND VALVE BOX ASSEMBLY PER CITY STANDARD DETAIL 004, AS SHOWN IN THESE PLANS AND THE SPECIFICATIONS. THE CITY PUBLIC WORKS INSPECTOR SHALL VERIFY THE LOCATION PRIOR TO CONSTRUCTION.
7. THE CONTRACTOR SHALL INSTALL NEW FIRE HYDRANT WITH BURY, PER PLANS AND THE SPECIFICATIONS, AND PER CITY STANDARD DETAIL NO. 020 AS SHOWN ON SHEET 17.
8. THE CONTRACTOR SHALL INSTALL RISER AND CONNECTION TO THE NEW CLARIFIER SYSTEM, WITH REDUCER, PER PLANS AND THE SPECIFICATIONS, AND PER SHEET 11.

SEWER CONSTRUCTION NOTES

1. THE CONTRACTOR SHALL CONSTRUCT THE NEW SEWER/CLARIFIER LATERAL, PER PLAN AND THE SPECIFICATIONS. THE NEW LATERAL SHALL BE PVC SDR 35 (PS46) WITH RUBBER RING JOINTS PER ASTM D3034 AND ASTM F679, OR APPROVED EQUAL. THE PIPE TRENCH BACKFILL SHALL BE PER CITY STANDARD DETAIL NO. 112 AS SHOWN ON SHEET 17.
2. THE CONTRACTOR SHALL CONSTRUCT A SEWER/CLARIFIER CLEAN OUT, PER PLAN AND THE SPECIFICATIONS, AND PER DETAIL SHOWN ON THIS SHEET 10.
3. THE CONTRACTOR SHALL CONSTRUCT THE SEWER CONNECTION TO THE NEW BUILDING PLUMBING, PER THESE PLANS AND SPECIFICATIONS, AND PER THE NEW BUILDING PLUMBING PLAN AS SHOWN ON SHEETS 68-70.
4. THE CONTRACTOR SHALL STUB END PLUG AT THE END OF THE PIPE, PER THESE PLANS AND SPECIFICATIONS.
5. THE CONTRACTOR SHALL CONSTRUCT A WASHDOWN DIVERSION SYSTEM, PER SHEET 10.
6. THE CONTRACTOR SHALL CONSTRUCT A 750 GALLON CLARIFIER SYSTEM, PER PLAN AND THE SPECIFICATIONS, AND PER DETAIL SHOWN ON SHEET 11. THE CLARIFIER SHALL BE THE JENSEN PRECAST CL750, OR APPROVED EQUAL.
7. THE CONTRACTOR SHALL CONSTRUCT A FIRE ENGINE WASHDOWN DIVERSION SYSTEM, PER PLAN AND THE SPECIFICATIONS. THE WASHDOWN DIVERSION SYSTEM SHALL BE THE DD600, BY FOX ENVIRONMENTAL SYSTEMS, AS SHOWN ON SHEET 11, OR APPROVED EQUAL. THE PUBLIC WORKS INSPECTOR SHALL VERIFY THE LOCATION OF THE NEW HOSE BIB PRIOR TO CONSTRUCTION.
8. THE CONTRACTOR SHALL COORDINATE SERVICE CONNECTIONS WITH BUILDING MANUFACTURER AND PUBLIC WORKS CITY ENGINEER PRIOR TO CONSTRUCTION.

SANITARY SEWER LINE TABLE

NO.	BEARING	DISTANCE	START NORTHING	START EASTING
SS1	N 59° 35' 12" E	30.81'	1921990.289	6177856.969
SS2	N 56° 08' 49" E	87.38'	1922005.889	6177883.543
SS3	S 66° 29' 28" E	62.88'	1922054.565	6177956.108
SS4	S 39° 48' 06" E	93.20'	1922029.482	6178013.770
SS5	N 50° 11' 53" E	37.70'	1921957.878	6178073.432
SS6	S 39° 54' 36" E	96.70'	1921957.878	6178073.432
SS7	N 77° 00' 47" E	199.98'	1922054.565	6177956.108
SS8	S 40° 01' 22" E	13.94'	1922099.506	6178150.976

FIRE LINE TABLE

NO.	BEARING	DISTANCE	START NORTHING	START EASTING
F1	N 50° 11' 85" E	66.37'	1921878.126	6178037.864
F2	S 39° 48' 06" E	84.22'	1921920.616	6178088.859
F3	S 50° 11' 85" W	94.72'	1921985.324	6178034.944
F4	N 08° 38' 42" E	11.72'	1922045.958	6178107.714
F5	N 50° 11' 54" E	66.20'	1922057.550	6178109.476
F6	N 39° 48' 06" W	8.28'	1922099.933	6178160.342

CLARIFIER SYSTEM LINE TABLE

NO.	BEARING	DISTANCE	START NORTHING	START EASTING
CLF1	S 78° 54' 04" E	5.80'	1922026.465	6177914.163
CLF2	S 56° 04' 03" E	49.17'	1922025.349	6177919.854
CLF3	N 73° 06' 54" E	28.61'	1921992.314	6177967.097
CLF4	N 50° 15' 36" E	120.32'	1922000.624	6177994.474
CLF5	N 76° 59' 43" E	54.56'	1922077.545	6178086.996
CLF6	S 39° 42' 56" E	13.43'	1922089.823	6178140.156
CLF7	S 39° 45' 08" E	18.53'	1922084.780	6178118.320
CLF8	S 39° 38' 51" E	33.60'	1922053.885	6178118.009

WATER LINE TABLE

NO.	BEARING	DISTANCE	START NORTHING	START EASTING
W1	S 49° 53' 03" E	157.82'	1921785.450	6178036.961
W2	S 39° 48' 06" E	155.98'	1921887.139	6178157.653
W3	N 50° 11' 54" E	149.31'	1921951.432	6177991.143
W4	N 08° 38' 43" E	11.73'	1922047.008	6178105.851
W5	N 50° 11' 54" E	56.50'	6178107.613	6178107.613
W6	S 39° 48' 06" W	10.28'	1922094.771	6178151.023

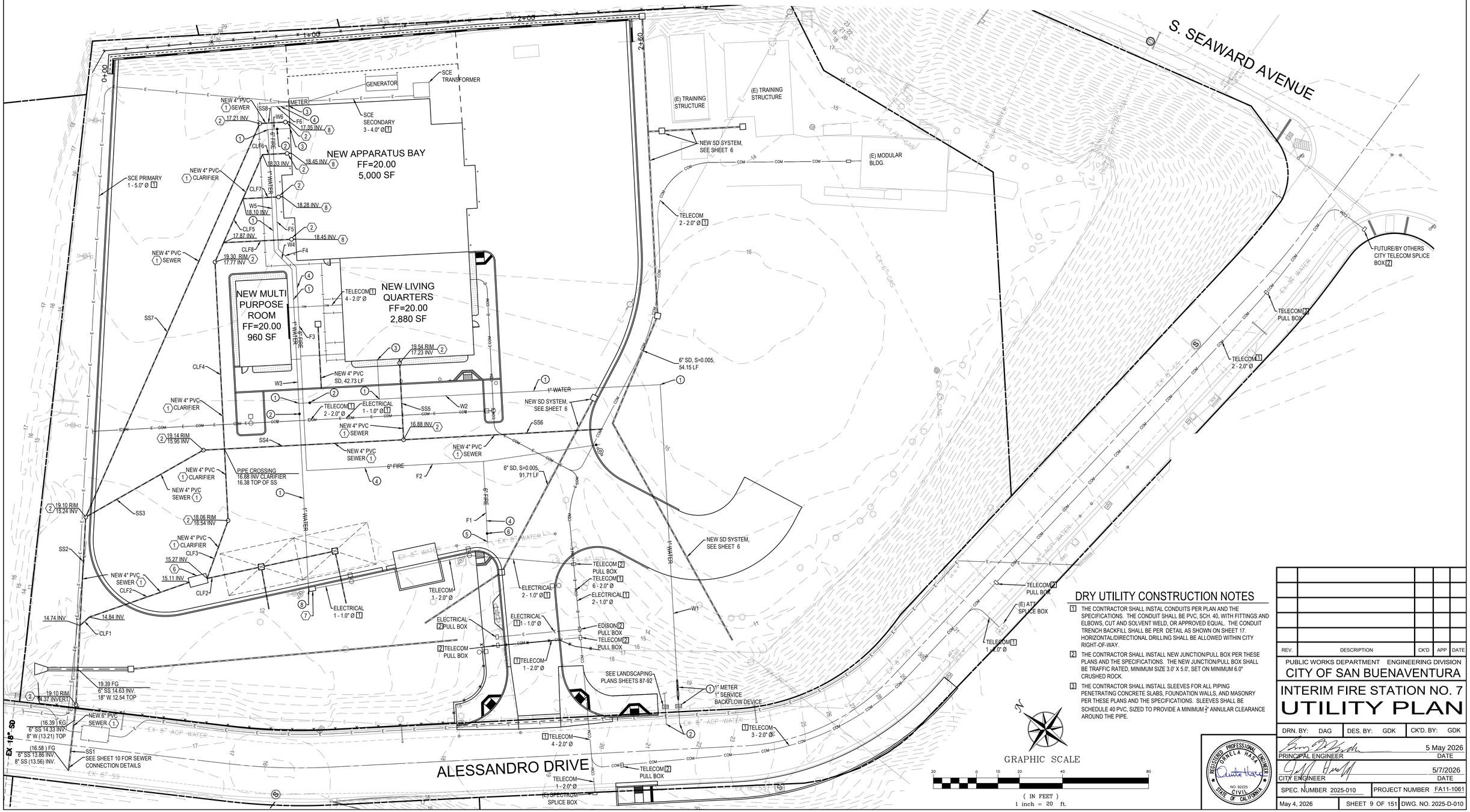

DRY UTILITY CONSTRUCTION NOTES

1. THE CONTRACTOR SHALL INSTAL CONDUITS PER PLAN AND THE SPECIFICATIONS. THE CONDUIT SHALL BE PVC, SCH. 40, WITH FITTINGS AND ELBOWS, CUT AND SOLVENT WELD, OR APPROVED EQUAL. THE CONDUIT TRENCH BACKFILL SHALL BE PER DETAIL AS SHOWN ON SHEET 17. HORIZONTAL/DIRECTIONAL DRILLING SHALL BE ALLOWED WITHIN CITY RIGHT-OF-WAY.
2. THE CONTRACTOR SHALL INSTALL NEW JUNCTION/PULL BOX PER THESE PLANS AND THE SPECIFICATIONS. THE NEW JUNCTION/PULL BOX SHALL BE TRAFFIC RATED, MINIMUM SIZE 3.0' X 5.0', SET ON MINIMUM 6.0" CRUSHED ROCK.
3. THE CONTRACTOR SHALL INSTALL SLEEVES FOR ALL PIPING PENETRATING CONCRETE SLABS, FOUNDATION WALLS, AND MASONRY PER THESE PLANS AND THE SPECIFICATIONS. SLEEVES SHALL BE SCHEDULE 40 PVC, SIZED TO PROVIDE A MINIMUM ½" ANNULAR CLEARANCE AROUND THE PIPE.

REV.	DESCRIPTION	CK'D	APP	DATE

PUBLIC WORKS DEPARTMENT ENGINEERING DIVISION

CITY OF SAN BUENAVENTURA

INTERIM FIRE STATION NO. 7

UTILITY PLAN

DRN. BY: DAG	DES. BY: GDK	CK'D. BY: GDK

PRINCIPAL ENGINEER — DATE: 5 May 2026

CITY ENGINEER — DATE: 5/7/2026

REGISTERED PROFESSIONAL ENGINEER — DANELA HASA — NO. 92228 — CIVIL — STATE OF CALIFORNIA

SPEC. NUMBER 2025-010 | PROJECT NUMBER FA11-1061

May 4, 2026 | SHEET 9 OF 151 | DWG. NO. 2025-D-010

204

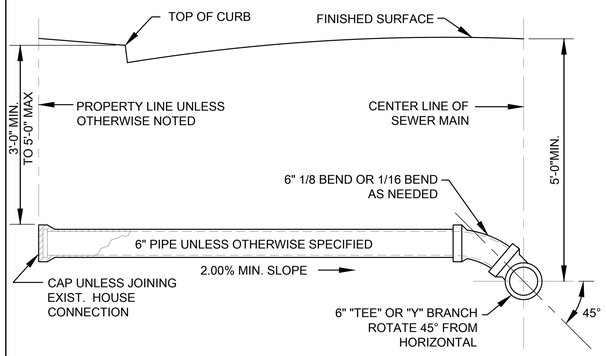

NOTES:

1. THE UPPER END OF THE HOUSE CONNECTION SHALL BE CAPPED WITH STANDARD PLASTIC CAP.
2. TYPE "A" HOUSE CONNECTION SHALL BE CONSTRUCTED UNLESS OTHERWISE SHOWN ON THE PLANS.
3. CONTRACTOR SHALL MARK A 2" HIGH "S" 1/8" DEEP ON THE CURB FACE AT ALL SEWER LATERALS.
4. PIPE SHALL BE SDR-35 PVC SEWER PIPE OR APPROVED EQUAL.
5. IF PIPE IS INSTALLED BY TRENCHLESS METHOD, PIPE SHALL BE HDPE, SDR-17 OR APPROVED EQUAL.

STANDARD HOUSE CONNECTION TYPE "A"

204

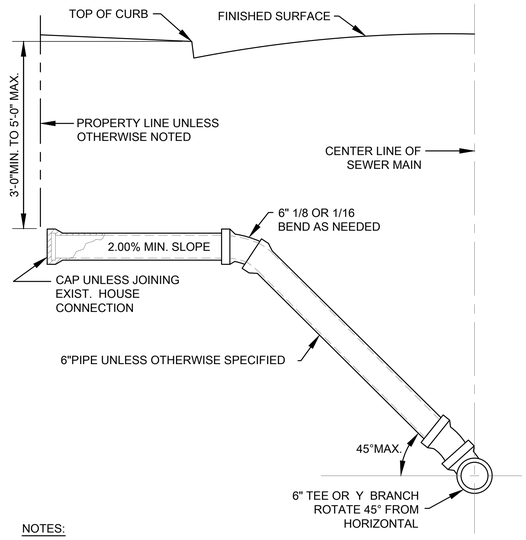

NOTES:

1. THE UPPER END OF THE HOUSE CONNECTION SHALL BE CAPPED WITH STANDARD PLASTIC CAP.
2. TYPE "A" HOUSE CONNECTION SHALL BE CONSTRUCTED UNLESS OTHERWISE SHOWN ON THE PLANS.
3. CONTRACTOR SHALL MARK A 2" HIGH "S" 1/8" DEEP ON THE CURB FACE AT SEWER LATERALS.
4. PIPE SHALL BE SDR-35 PVC SEWER PIPE, OR APPROVED EQUAL.
5. IF PIPE IS INSTALLED BY TRENCHLESS METHOD, PIPE SHALL BE HDPE, SDR-17 OR APPROVED EQUAL.

STANDARD HOUSE CONNECTION TYPE "B"

204

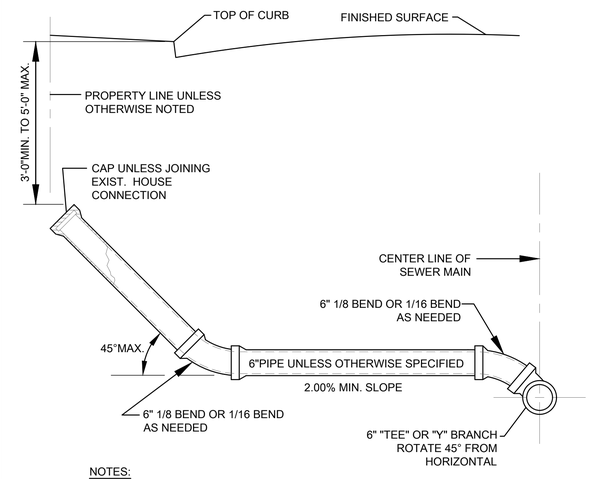

NOTES:

1. THE UPPER END OF THE HOUSE CONNECTION SHALL BE CAPPED WITH STANDARD PLASTIC CAP.
2. TYPE "A" HOUSE CONNECTION SHALL BE CONSTRUCTED UNLESS OTHERWISE SHOWN ON THE PLANS.
3. CONTRACTOR SHALL MARK A 2" HIGH "S" 1/8" DEEP ON THE CURB FACE AT SEWER LATERALS.
4. PIPE SHALL BE SDR-35 PVC SEWER PIPE, OR APPROVED EQUAL.
5. IF PIPE IS INSTALLED BY TRENCHLESS METHOD, PIPE SHALL BE HDPE, SDR-17 OR APPROVED EQUAL.

STANDARD HOUSE CONNECTION TYPE "C"

CONSTRUCTION NOTES

LEGEND

1. STRUCTURAL SECTION - MATCH EXISTING AC THICKNESS + 1"; MATCH EXISTING BASE THICKNESS. MINIMUM SHALL BE 4" AC OVER 8" PMB. FOR P.C.C. PAVING, MINIMUM THICKNESS IS 8" (EXCEPT AC OVERLAY ON P.C.C. SHALL MATCH EXISTING).
2. BACKFILL - IMPORT, COMPACTED TO 90% RELATIVE DENSITY. OR 100-E-100 SLURRY AS APPROVED BY THE CITY ENGINEER. COMPACTION TEST REPORT FROM A CERTIFIED SOIL LAB MUST BE PROVIDED TO CITY INSPECTOR PRIOR TO AC OR PCC PAVING.
3. PIPE ZONE - IMPORT CLEAN SAND WITH SAND EQUIVALENT OF 20 OR GREATER. COMPACT TO 90% RELATIVE DENSITY.
4. IF SAND EQUIVALENT IS 20 OR GREATER, JETTING MAY BE USED IN PIPE ZONE ONLY WHEN APPROVED BY THE CITY ENGINEER.
5. STREET SHALL BE SAWCUT. IF SAWCUT IS DAMAGED AFTER UTILITY IS INSTALLED AND BACKFILL IS COMPLETE, THE STREET SHALL BE RE-SAWCUT SO THAT A CLEAN EDGE REMAINS FOR PAVING. SAWCUT A MINIMUM OF 1/2 PAVEMENT THICKNESS. FOR P.C.C. OVERLAYED BY ASPHALT, SAWCUT THICKNESS OF P.C.C. PLUS A.C. THICKNESS. ALL ASPHALTIC CONCRETE JOINTS SHALL BE SEALED WITH ASPHALTIC EMULSION, 6" MINIMUM EITHER SIDE BEFORE AND AFTER PAVEMENT IS PLACED. JOINTS OF NEW ASPHALTIC CONCRETE SHALL BE FLUSH WITH THE EXISTING PAVEMENT.
6. RECENTLY RESURFACED/MORATORIUM STREETS: FOR PERPENDICULAR TRENCHES, SEAL PAVEMENT WITH SLURRY SEAL CONSISTING OF MIX DESIGN APPROVED BY CITY ENGINEER, OVER ENTIRE TRENCH WIDTH PLUS AN ADDITIONAL 6' ON EITHER SIDE OF TRENCH CENTERLINE. FOR LONGITUDINAL TRENCHES,MILL AND FILL ENTIRE AREA ADJACENT TO TRENCH AND EXTEND TO NEXT LANE LINE OR CURB/GUTTER AS APPLICABLE (REPAIR ENTIRE LANES THAT ARE IMPACTED BY TRENCH CUT) UNLESS OTHERWISE APPROVED BY THE CITY ENGINEER. PAVEMENT SHALL BE CONTINUOUS WITH JOINTS ONLY WHERE NEW AND EXISTING ASPHALT/CONCRETE JOIN.
7. THE CONTRACTOR SHALL REPLACE TRAFFIC STRIPING, STREET MARKINGS, AND CURB MARKINGS REMOVED OR DAMAGED BY THE WORK WITH LIKE KIND MATERIALS TO MATCH EXISTING STRIPING.
8. FOR MULTIPLE TRENCH REPAIR LOCATIONS ADJACENT TO EACH OTHER, DISTANCE BETWEEN REPAIRS SHALL BE NO LESS THAN 4' OTHERWISE AREA BETWEEN TRENCHES SHALL BE A PART OF THE REPAIR. FOR MULTIPLE LOCATIONS LESS THAN 32 SQ FT IN SIZE. THE PAVEMENT SHALL BE SEALED WITH A TYPE II SLURRY SEAL TO INCLUDE THE FULL WIDTH (+1') AND LENGTH (+1') OF ALL TRENCH CUTS.
9. TRENCH REPAIR MUST BE UNIFORM AND SQUARE. ZIG ZAG TRENCHES ARE NOT ALLOWED.

NOTE:
TRENCH BACKFILL DETAILS ARE APPLICABLE FOR ALL UNDERGROUND UTILITY INSTALLATIONS INCLUDING, WITHOUT LIMITATION; TELECOMMUNICATIONS (CABLE, T.V., PHONE, ETC.), GAS, ELECTRIC, AND ALL UTILITIES INSTALLING CONDUITS WITHIN CITY STREETS WITHOUT A FRANCHISE AGREEMENT WITH THE CITY.

TRENCH BACKFILL

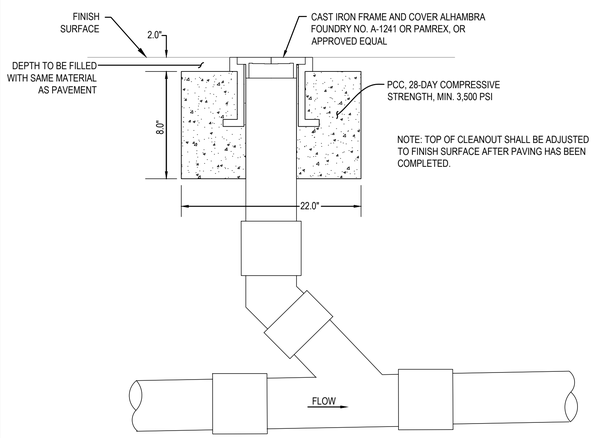

SEWER/CLARIFIER CLEANOUT

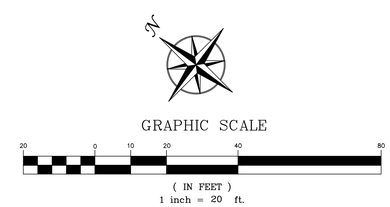

REV.	DESCRIPTION	CK'D	APP	DATE

PUBLIC WORKS DEPARTMENT ENGINEERING DIVISION
CITY OF SAN BUENAVENTURA

INTERIM FIRE STATION NO. 7
SANITARY SEWER STANDARD DETAILS

DRN. BY: DAG | DES. BY: GDK | CK'D. BY: GDK

PRINCIPAL ENGINEER — DATE: 5 May 2026

CITY ENGINEER — DATE: 5/7/2026

REGISTERED PROFESSIONAL ENGINEER DANELA HASA NO. 92228 CIVIL STATE OF CALIFORNIA

SPEC. NUMBER 2025-010 | PROJECT NUMBER FA11-1061

April 28, 2026 | SHEET 10 OF 151 | DWG. NO. 2025-D-010

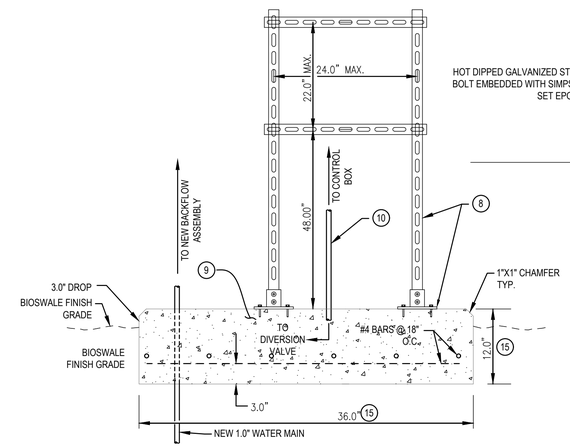

WASHDOWN DIVERSION SYSTEM MOUNT

SCALE: NOT TO SCALE

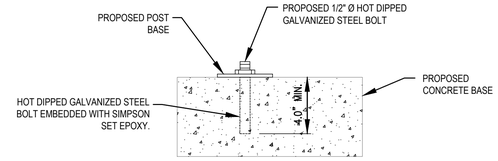

POST BASE ANCHOR DETAIL

N.T.S.

CONSTRUCTION NOTES

1. 6 CORE CONTROL CABLE
2. 1/2" Ø COPPER DRIVE LINE
3. FOX DIVERSION VALVE, OR APPROVED EQUAL.
4. FLOAT ACTIVATION LEVEL
5. HOSE BIB
6. PLC, DEMAND VALVE, AND GPO (240v 10Amp) CONTROL BOX, 304 STAINLESS STEEL
7. BACKFLOW ASSEMBLY PER CITY STANDARD DETAIL NO. 010 AS SHOWN ON SHEET 12.
8. GALVANIZE STEEL FRAME SYSTEM, INCLUDING POST BASE ANCHORS, NUTS AND BOLTS, BY UNISTRUT MODEL P1000WT, HOT DIPPED GALVANIZED, MINIMUM 12-GAUGE, 1-5/8" CHANNEL RAILS, CONFORMING TO ASTM A123, OR APPROVED EQUAL.
9. 2.0' X 4.0' X 12.0" CONCRETE, 560-C-3250, BASE.
10. 2.0" GALVANIZED STEEL RISER FOR THE 6 CORE CONTROL CABLE.
11. THE CONTRACTOR SHALL CONSTRUCT THE NEW CLARIFIER PIPE, PER PLAN AND THE SPECIFICATIONS. THE CLARIFIER PIPE SHALL BE PVC SDR 35 (PS46) WITH RUBBER RING JOINTS PER ASTM D3034 AND ASTM F679, OR APPROVED EQUAL. THE PIPE TRENCH BACKFILL SHALL BE PER CITY STANDARD DETAIL NO. 112 AS SHOWN ON SHEET 16.
12. THE CONTRACTOR SHALL CONSTRUCT A 750 GALLON CLARIFIER SYSTEM, PER PLAN AND THE SPECIFICATIONS, AND PER DETAIL SHOWN ON THIS SHEET. THE CLARIFIER SHALL BE THE JENSEN PRECAST CL750, OR APPROVED EQUAL.
13. THE CONTRACTOR SHALL CONSTRUCT A WASHDOWN DIVERSION SYSTEM, PER PLAN AND THE SPECIFICATIONS, AND PER DETAIL SHOWN ON THIS SHEET. THE WASHDOWN DIVERSION SYSTEM SHALL BE THE FOX DD600, BY FOX ENVIRONMENTAL SYSTEMS, OR APPROVED EQUAL.
14. THE CONTRACTOR SHALL CONSTRUCT A WASHDOWN DIVERSION SYSTEM, PER PLAN AND THE SPECIFICATIONS, AND PER DETAIL SHOWN ON THIS SHEET. THE WASHDOWN DIVERSION SYSTEM SHALL BE THE FOX DD600, BY FOX ENVIRONMENTAL SYSTEMS, OR APPROVED EQUAL.
15. THE CONTRACTOR SHALL CONSTRUCT A 2' X 3' X 12" CONCRETE BASE FOR THE NEW WASHDOWN DIVERSION SYSTEM STEEL MOUNT. CONCRETE SHALL BE 520-C-2500.
16. THE CONTRACTOR SHALL CONSTRUCT CLEAN OUT, PER PLAN AND THE SPECIFICATIONS, PER PLUMBING PLANS SHEETS 64 THRU 67, AND PER DETAIL SHOWN ON THIS SHEET 16.
17. THE CONTRACTOR SHALL CONSTRUCT A NEW CATCH BASIN WITH PIPE PER THESE PLANS AND THESE SPECIFICATIONS, PER SHEETS 5 AND 7, AND PER AND PER DETAIL THIS SHEET. THE NEW CATCH BASIN SHALL BE THE PRECAST CONCRETE 12"X12", STANDARD CATCH BASIN WITH GALVANIZED STEEL TRAFFIC RATED FRAME AND GRATE, BY PRECON PRODUCTS, OR APPROVED EQUAL.

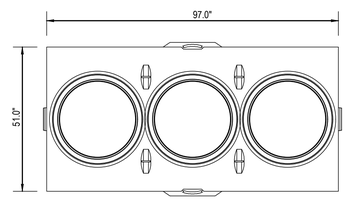

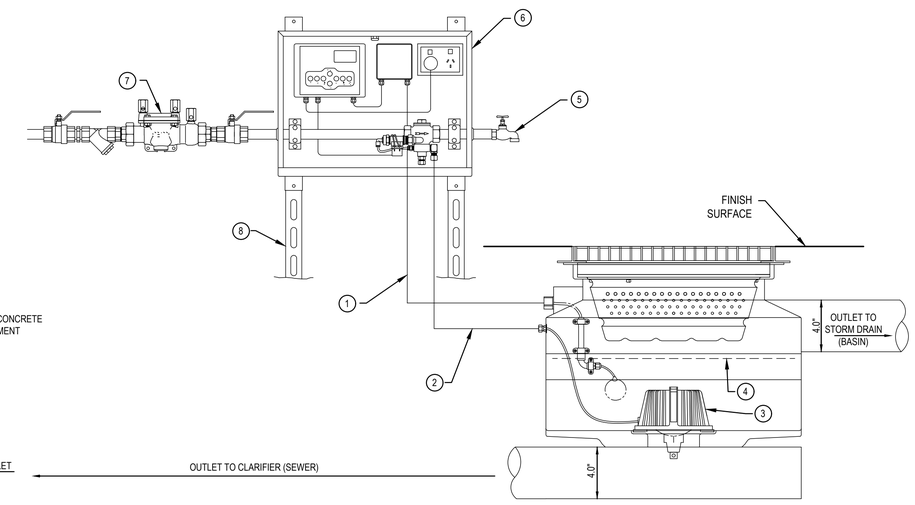

WASHDOWN DIVERSION SYSTEM

SCALE: NOT TO SCALE

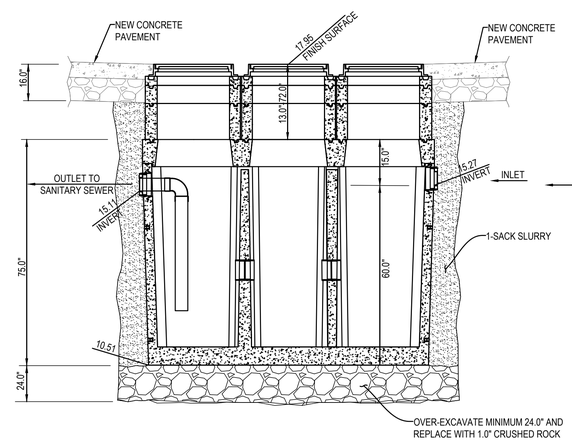

CLARIFIER SYSTEM DETAIL

SCALE: NOT TO SCALE

REV.	DESCRIPTION	CK'D	APP	DATE

PUBLIC WORKS DEPARTMENT ENGINEERING DIVISION

CITY OF SAN BUENAVENTURA

INTERIM FIRE STATION NO. 7

CLARIFIER SYSTEM DETAILS

DRN. BY: DAG	DES. BY: GDK	CK'D. BY: GDK

PRINCIPAL ENGINEER — DATE: 5 May 2026

CITY ENGINEER — DATE: 5/7/2026

REGISTERED PROFESSIONAL ENGINEER — DAMELA HASH — NO. 92225 — CIVIL — STATE OF CALIFORNIA

SPEC. NUMBER 2025-010	PROJECT NUMBER FA11-1061
April 28, 2026	SHEET 11 OF 151	DWG. NO. 2025-D-010

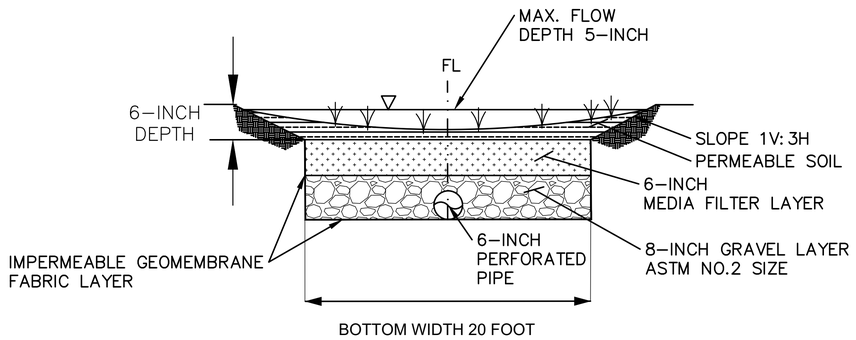

DETENTION SWALE SECTION VIEW
Not to Scale

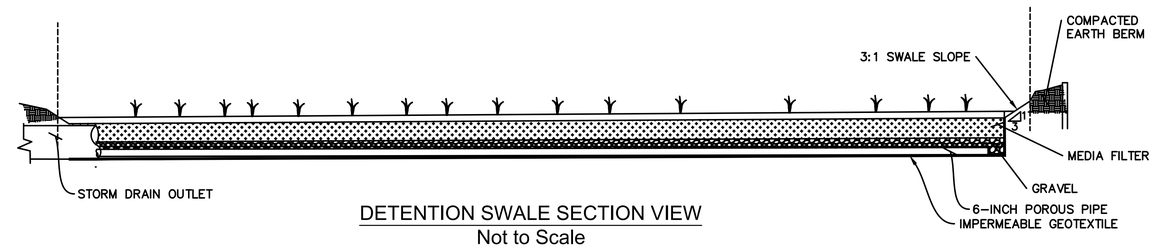

DETENTION SWALE SECTION VIEW
Not to Scale

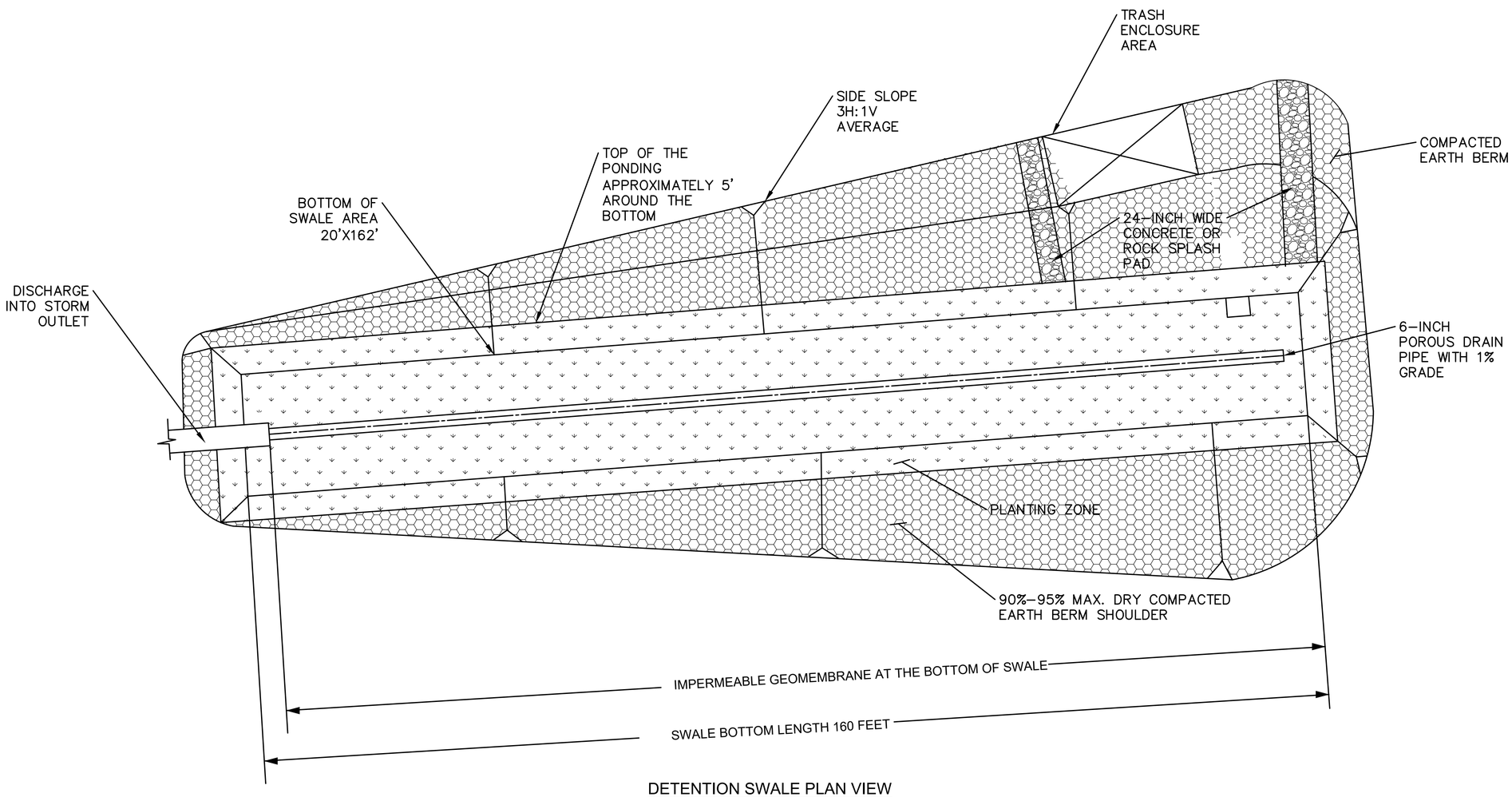

DETENTION SWALE PLAN VIEW
Not to Scale

REV.	DESCRIPTION	CK'D	APP	DATE

PUBLIC WORKS DEPARTMENT ENGINEERING DIVISION
CITY OF SAN BUENAVENTURA

INTERIM FIRE STATION NO. 7
BIOSWALE DETAILS

DRN. BY: DAG | DES. BY: GDK | CK'D. BY: GDK

PRINCIPAL ENGINEER — DATE: 5 May 2026

CITY ENGINEER — DATE: 5/7/2026

REGISTERED PROFESSIONAL ENGINEER — DURAELA HASH — NO. 92225 — CIVIL — STATE OF CALIFORNIA

SPEC. NUMBER 2025-010 | PROJECT NUMBER FA11-1061

April 28, 2026 | SHEET 12 OF 151 | DWG. NO. 2025-D-010

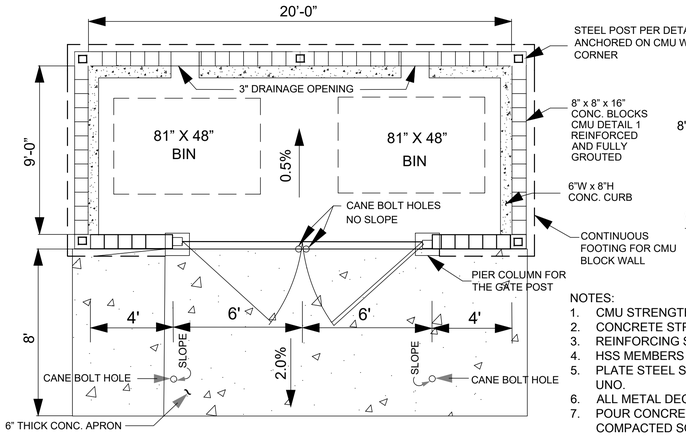

TRASH ENCLOSURE PLAN VIEW

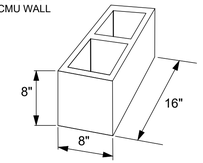

CMU BLOCK

NOTES:

1. CMU STRENGTH, f'm = 2,000 PSI
2. CONCRETE STRENGTH, f'c = 4,000 PSI
3. REINFORCING SHALL BE ASTM A706 GR 60.
4. HSS MEMBERS SHALL BE GR. 50 AND GALVANIZED.
5. PLATE STEEL SHALL BE GR. 50 AND GALVANIZED, UNO.
6. ALL METAL DECK TO BE GALVANIZED.
7. POUR CONCRETE FOOTING AGAINST PROPERLY COMPACTED SOIL PER SOILS REPORT.
8. PRODUCTS TO BE AS SPECIFIED OR APPROVED EQUAL.

TRASH BIN DIMENSION

Container	Clearance Dimension (inches)			Volume (yd3)	Equivalent Container(s)	Notes
	Length	Width	Height			
3 YD^3bin	81	48	60	3.00	6-96 gallon carts	not availabe for food material

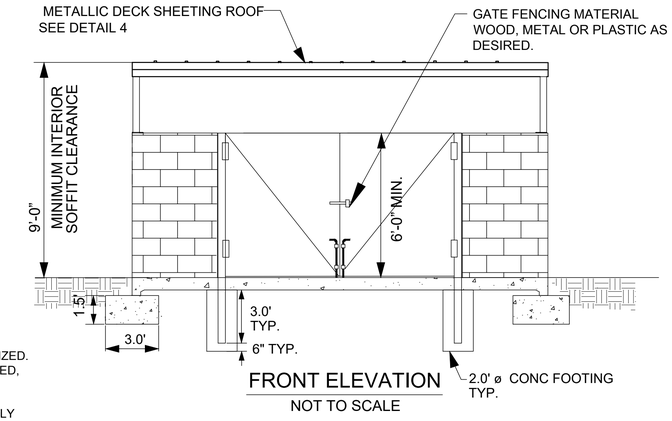

FRONT ELEVATION

NOT TO SCALE

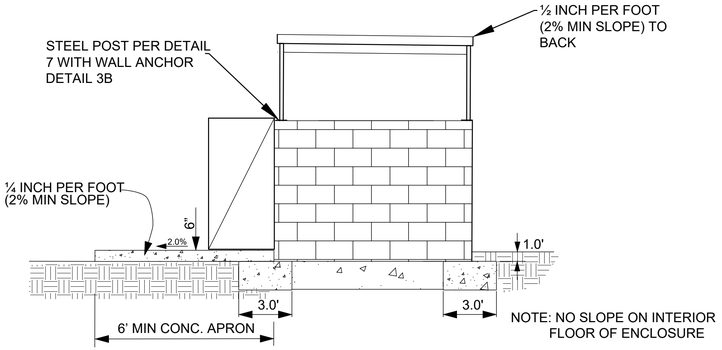

SIDE ELEVATION

NOT TO SCALE

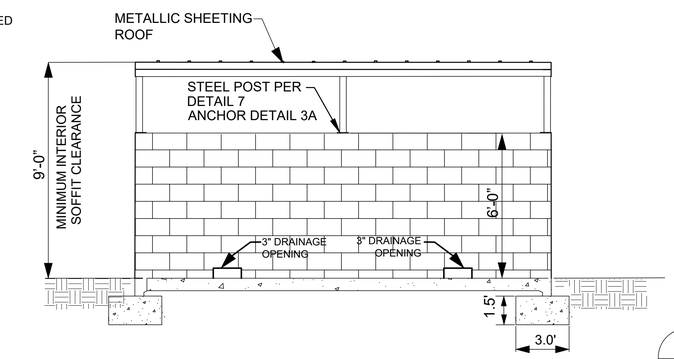

REAR ELEVATION

NOT TO SCALE

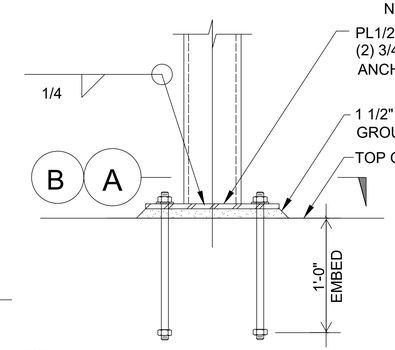

3 HSS ANCHORAGE TO CMU WALL

1" = 1' - 0"

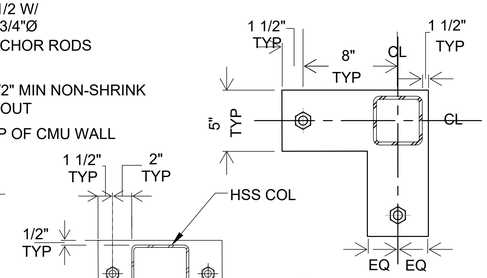

A 3 BASE PLATE

B 3 BASE PLATE

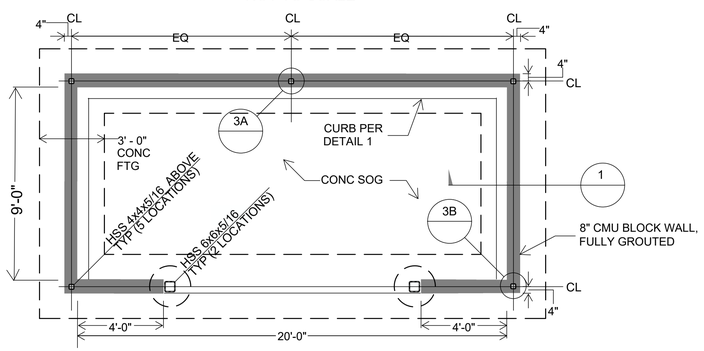

7 FOUNDATION PLAN VIEW

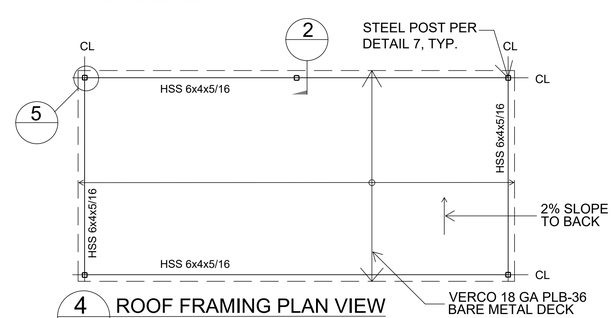

4 ROOF FRAMING PLAN VIEW

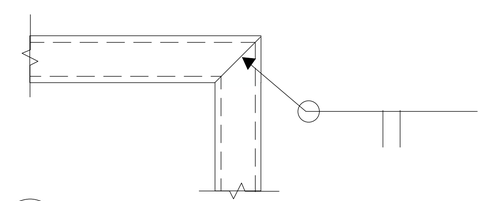

5 HSS CORNER CONNECTION

SCALE N/A

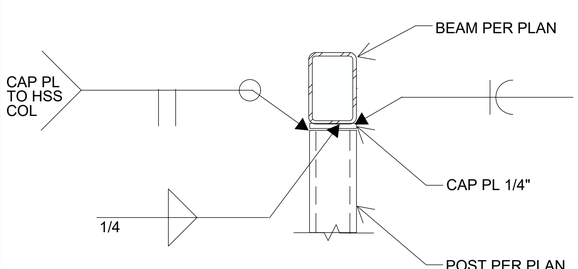

2 HSS TO HSS TYPICAL CONNECTION

SCALE N/A

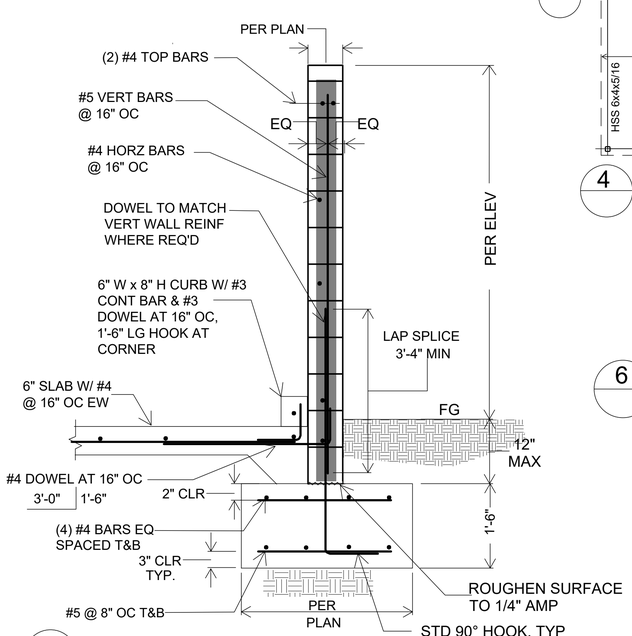

1 WALL SECTION

SCALE N/A

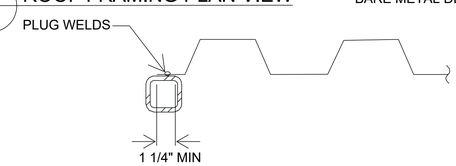

6 DECK EDGE ALIGMENT BEARING DETAIL

DECK ATTACHMENT			
END	INTERMEDIATE	SEAM	MARGINAL
3/4" Ø PUDDLE WELD @ 12" OC	3/4" Ø PUDDLE WELD @ 12" OC	BUTTON PUNCH @ 36" OC	3/4" Ø PUDDLE WELD @ 12" OC

REV.	DESCRIPTION	CK'D	APP	DATE

PUBLIC WORKS DEPARTMENT ENGINEERING DIVISION

CITY OF SAN BUENAVENTURA

INTERIM FIRE STATION NO. 7

TRASH ENCLOSURE DETAILS

DRN. BY: DAG DES. BY: GDK CK'D. BY: GDK

PRINCIPAL ENGINEER 5 May 2026 DATE

CITY ENGINEER 5/7/2026 DATE

SPEC. NUMBER 2025-010 PROJECT NUMBER FA11-1061

April 28, 2026 SHEET 13 OF 151 DWG. NO. 2025-D-010

REGISTERED PROFESSIONAL ENGINEER DANELA HASA NO. 92226 CIVIL STATE OF CALIFORNIA

NLS LIGHTING — VSS-1

SITE LIGHTING

FORM AND FUNCTION
- Sleek, low profile housing
- Engineered for optimum thermal management
- Low depreciation rate
- Optical system designed for:
  - Parking Lots
  - Commercial Applications

CONSTRUCTION
- Die Formed heavy duty Aluminum
- Corrosion resistant external hardware
- One-piece silicone gasket ensures IP-65 seal for electronics compartment
- Two-piece silicone Micro Optic system ensures IP-67 level seal around each PCB

FINISH
- 3-5 mils electrostatic powder coat.
- NLS' standard high-quality finishes prevent corrosion protects against extreme environmental conditions

WARRANTY
Five-year limited warranty for drivers and LEDs.

LISTINGS
- Certified to UL 1598
- CSA C22.2 No. 250.0
- DesignLights Consortium® (DLC)
- DesignLights Consortium Premium® (DLCP)
- IP65/ IP67 Rated

LED WATTAGE CHART

	32L	48L	64L
350 milliamps	-	-	-
530 milliamps	-	-	-
700 milliamps	71w	104w	136w
1050 milliamps	106w	156w	205w

Project Name: | Type:

Cat #	Light Dist.	No. of LEDs	Milliamps	Kelvin	Volts	Mounting	Color	Options
Value Series Square 1 (VSS-1)	Type 2 (T2) Type 3 (T3) Type 4 (T4) Type 5 (T5) Nema 3 30° Narrow Beam (N3)	32 (32L) 48 (48L) 64 (64L)	700 (7) 1050 (1)	3000K (30K) 4000K (40K) 5000K (50K)	120-277 (UNV) 340-480 (HV)	Direct Pole Single, D180 6" (DP6) D90, T90, T120, QD 10" (DP10) *For Round Poles please order RPA Adaptor *See next page for Arm Configurations Knuckle Mount (KM) Trunion Mount (TM) Wall Mount (WM) *Includes 6" Bolt On Arm Tennis Arm (TA)	Bronze (BRZ) White (WHT) Silver (SVR) Black (BLK) Graphite (GPH) Grey (GRY) Custom (CS)	Bird Spikes (BS) Marine Grade Finish (MGF) Surge Protector (10K) Nema 7-Pin Receptacle (PE7) Photocell (PC) *Universal Voltage 120-277 Photocell + Receptacle (PCR) Motion Sensor (MS) FSP-211 with Motion Sensor (UNV Voltage) For 8' + Below (FSP-8) For 9' to 20' (FSP-20) For 21' to 40' (FSP-40) *Motion Sensor and FSP-211 are integral to the fixture Quick Mount Bracket (QMB) Retrofit Quick Mount Bracket (RQMB) Internal Microwave Motion Sensor (IMMS) Rotate Optic Right (ROR) Rotate Optic Left (ROL) Round Pole Adaptor 3"-4" Pole (RPA4) Round Pole Adaptor 5"-6" Pole (RPA5) House Side Shields (HSS) *HSS not applicable with N3 - NEMA 30° Optics Automotive House Side Shield (AHS) Acrylic Optics (AO)

valmont STRUCTURES — ROUND TAPERED STEEL DS210 Light Duty

Poles - Steel | RTS / DS210 | Light Duty

Job Name: KIMBALL PARK PARKING LOT PROJECT
Job Location - City: VENTURA State: CA
Product: DS210 ---- Quote:
Client Name:
Created By: Date:
Customer Approval: Date:

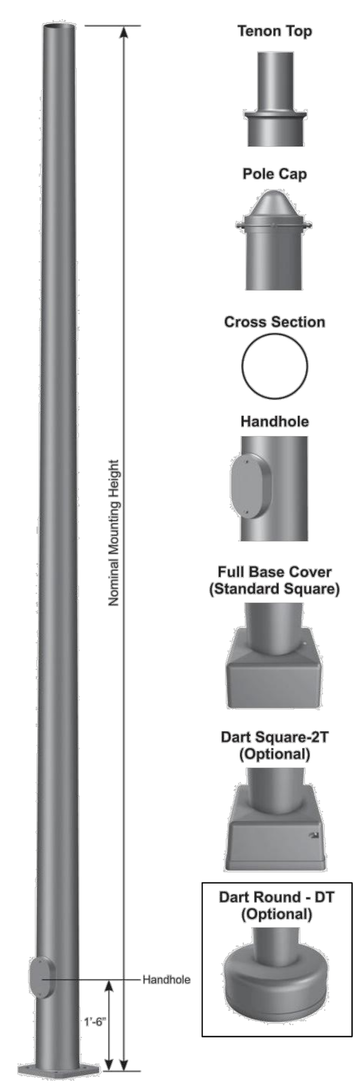

PROVIDE CUSTOM BOLT SKIRT TO MATCH EXISTING

SPECIFICATIONS

Pole Shaft - The pole shaft is a 1-piece assembly conforming to ASTM A595 Grade A or A572 Grade 55 with a constant linear taper of 0.14 in/ft.

Pole Top - Pole is provided with either a tenon top or drilled for a fixture mounting. A removable pole cap is provided for drilled poles. Consult the luminaire manufacturer for correct tenon size or drill pattern. Other pole top options include pole cap only (PC) or plain top (PL) which is typical when the pole top diameter matches the necessary slip fit dimensions.

Handhole - A reinforced handhole with grounding provision is provided at 1'-6" from the base end of the pole assembly. Each handhole includes a cover and the cover attachment hardware. Poles with a 5.90" base diameter are supplied with a 3" X 5" rectangular handhole. All other pole assemblies are provided with a 4" X 6.5" ovalized handhole. Handhole dimensions are nominal.

Base Cover - A two-piece full base cover fabricated from ABS plastic is provided with each pole assembly. Valmont reserves the right to provide a two-piece steel full base cover on some applications depending upon the finish requirement and/or pole base diameter. Nut covers can be substituted on most models. Additional base cover options, including the Dart Square (2T) cast aluminum cover and Dart Round (DT) cast aluminum cover, are available upon request.

Anchor Bolts - Anchor bolts conform to ASTM F1554 Grade 55 and are provided with two hex nuts and two flat washers. Bolts have an "L" bend on one end and are galvanized a minimum of 12" on the threaded end.

Hardware - All structural fasteners are galvanized high strength carbon steel. All non-structural fasteners are galvanized or zinc-plated carbon steel or stainless steel.

Finish - Standard finishes are either Galvanized (GV) or Finish Painted (FP). Additional finish options including Finish Paint over Galvanizing (FPGV) or any of the V-PRO™ Finish Coating Systems are available upon request. See the product ordering code for color options.

Design Criteria - Please reference Design Criteria Specification for appropriate design conditions.

VALMONT INDUSTRIES, INC. 28800 IDA STREET, PO BOX 358 - VALLEY, NE 68064 USA 800.825.6668 VALMONTSTRUCTURES.COM

ROUND TAPERED STEEL DS210 Light Duty — valmont STRUCTURES

Poles - Steel | RTS / DS210 | Light Duty

Job Name:
Job Location - City: State:
Product: DS210 ---- Quote:
Client Name:
Created By: Date:
Customer Approval: Date:

DESIGNATION, LOAD AND DIMENSIONAL DATA

NOMINAL MOUNTING HEIGHT	80 MPH w/1.3 GUST MAX EPA[1] (SQFT)	80 MPH MAX WEIGHT[1] (LBS)	90 MPH w/1.3 GUST MAX EPA[1] (SQFT)	90 MPH MAX WEIGHT[1] (LBS)	100 MPH w/1.3 GUST MAX EPA[1] (SQFT)	100 MPH MAX WEIGHT[1] (LBS)	BASE OD (IN)	TOP OD (IN)	WALL THK (GA)	STRUCTURE WEIGHT[2] (LBS)	DESIGNATION
20'-0"	19.3	482	15.1	377	12.2	305	5.90	3.10	11	140	590A200
	24.2	605	19.3	482	15.6	390	6.50	3.70	11	160	650A200
25'-0"	12.5	312	9.9	247	8.0	200	5.90	2.40	11	155	590A250
	20.3	507	16.2	405	13.1	327	7.00	3.50	11	200	700A250
	30.5	760	24.0	625	19.8	495	7.00	3.50	7	280	700E250
30'-0"	11.7	292	9.3	232	7.5	187	6.60	2.40	11	200	660A300
	18.9	473	14.9	373	12.0	300	8.00	3.80	11	265	800A300
	33.5	838	27.0	675	22.0	550	8.00	3.80	7	380	800E300
35'-0"	11.2	280	8.9	222	7.1	177	7.30	2.40	11	250	730A350
	18.9	472	15.1	377	12.2	305	8.50	3.60	11	315	850A350
	23.2	580	18.2	455	14.5	363	9.50	4.60	11	370	950A350
39'-0"	10.7	267	8.5	212	6.6	165	7.82	2.40	11	285	782A389
	17.2	430	13.5	338	10.8	270	9.00	3.58	11	355	900A389
	28.5	715	23.0	575	19.0	475	9.00	3.58	7	515	900E389
45'-0"	17.4	435	13.5	338	10.6	265	10.00	3.70	11	450	T00A450
	28.5	715	23.0	575	19.0	475	10.00	3.70	7	650	T00E450
50'-0"	13.2	330	10.6	265	8.3	208	10.00	3.00	11	475	T00A500
	20.5	512	16.5	412	13.6	340	10.00	3.00	7	680	T00E500

CUSTOM CUT POLE TO 22'

DS210 Heavy Duty poles available at valmontstructures.com

1. Maximum EPA (Effective Projected Area) and weight values are based on top mounted luminaires and/or brackets having a centroid 2'-6" above the Nominal Mounting Height. Variations from sizes above are available upon inquiry at the factory. Satisfactory performance of poles is dependent upon the pole being properly attached to a supporting foundation of adequate design.
2. Structure weight is a nominal value which includes the pole shaft and base plate only.

ANCHORAGE DATA

POLE BASE OD (IN)	POLE WALL THK (GA)	BASE PLATE BOLT CIRCLE DIA (IN)	BOLT CIRCLE ± (IN)	BASE PLATE SQUARE (IN)	BASE PLATE THK (IN)	ANCHOR BOLTS DIA x LENGTH x HOOK (IN)	ANCHOR BOLTS PROJECTION (IN)	± (IN)
5.90	11	9.00	0.50	10.00	0.875	1.00 x 36.00 x 4.00	4.13	0.25
6.50	11	9.50	0.50	10.50	0.875	1.00 x 36.00 x 4.00	4.13	0.25
6.60	11	9.50	0.50	10.50	0.875	1.00 x 36.00 x 4.00	4.13	0.25
7.00	11	10.00	0.50	10.88	0.875	1.00 x 36.00 x 4.00	4.13	0.25
7.00	7	10.00	0.50	10.88	1.000	1.00 x 36.00 x 4.00	4.25	0.25
7.30	11	10.50	0.50	11.25	0.875	1.00 x 36.00 x 4.00	4.13	0.25
7.82	11	11.00	0.50	11.50	0.875	1.00 x 36.00 x 4.00	4.13	0.25
8.00	11	11.00	0.50	11.50	0.875	1.00 x 36.00 x 4.00	4.13	0.25
8.00	7	11.00	0.50	11.50	1.250	1.25 x 42.00 x 6.00	5.00	0.25
8.50	11	11.50	0.50	12.00	1.000	1.00 x 36.00 x 4.00	4.25	0.25
9.00	11	12.50	0.50	12.38	1.000	1.00 x 36.00 x 4.00	4.25	0.25
9.00	7	12.50	0.50	12.38	1.250	1.25 x 42.00 x 6.00	5.00	0.25
9.50	11	13.00	0.50	13.00	1.000	1.00 x 36.00 x 4.00	4.25	0.25
10.00	11	13.50	0.50	14.00	1.000	1.00 x 36.00 x 4.00	4.25	0.25
10.00	7	13.50	0.50	14.00	1.250	1.25 x 42.00 x 6.00	5.00	0.25

Anchor Base Detail

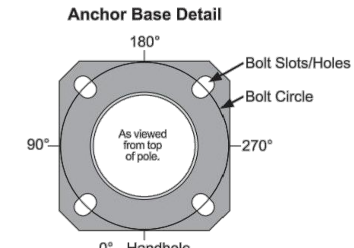

PRODUCT ORDERING CODE

MODEL	DESIGNATION	FIXTURE MOUNTING	FINISH SYSTEM	STANDARD COLOR OPTIONS	BASE COVER	ANCHOR BOLTS	SUPPLEMENTAL INFO
DS210	590A250		--	--	--	--	
	Select Correct Designation from the Load and Dimensional Data Chart.	**Drill Mounting (See Orientation)** D1 = (1) Drilling @ 270° D2 = (2) Drillings @ 90° & 270° D3 = (3) Drillings @ 60°, 180°, & 300° D4 = (4) Drillings @ 0°, 90°, 180°, & 270° D5 = (2) Drillings @ 180° & 270° D6 = (3) Drillings @ 90°, 180°, & 270° **Tenon Mounting** P2 = 2.38" OD x 4" tenon P4 = 4.00" OD x 6" tenon P5 = 2.88" OD x 4" tenon P6 = 2.88" OD x 5" tenon P7 = 2.38" OD x 5" tenon P9 = Special Size (Specify) **Other Options** PC = Pole Cap PL = Plain Top (No Cap)	GV = Galvanized FP = Finish Painted -----OPTIONAL----- FPGV = Finish Paint over Galvanizing VP30 = V-PRO™ 30 System VP32 = V-PRO™ 32 System VP53 = V-PRO™ 53 System VP54 = V-PRO™ 54 System VP57 = V-PRO™ 57 System VP100 = V-PRO™ 100 System VP105 = V-PRO™ 105 System	GV = Galvanized BK = Black DB = Dark Bronze MB = Medium Bronze WH = White LG = Light Gray CB = Bronze DG = Dark Green ST = Sandstone HG = Hunter Green SG = Slate Gray SL = Silver SC = Special Color (Specify)	FBC = Full Base Cover -----OPTIONAL----- NC = Nut Covers 2T = Square Dart Cover DT = Dart Round Cover	AB = With Anchor Bolts LAB = Without Anchor Bolts	

VALMONT INDUSTRIES, INC. 28800 IDA STREET, PO BOX 358 - VALLEY, NE 68064 USA 800.825.6668 VALMONTSTRUCTURES.COM

STRUCTURAL STEEL

1. ALL STRUCTURAL STEEL SHALL CONFORM TO ASTM A-36 EXCEPT FOR "HSS" TUBE SHAPES WHICH SHALL CONFORM TO NOTE 2 BELOW.

2. STEEL PIPE SHALL CONFORM TO ASTM A-53, GRADE "B" AND TUBULAR STEEL MEMBERS SHALL CONFORM TO ASTM A-500, GRADE "B".

3. ALL WELDING SHALL BE PERFORMED WITH E70XX ELECTRODES CONFORMING TO AWS D1.1, LATEST EDITION. PROVIDE BACKING PLATES AS REQUIRED FOR FULL PENETRATION WELDS.

4. STRUCTURAL STEEL SHALL BE DETAILED, FABRICATED, AND ERECTED IN ACCORDANCE WITH THE "SPECIFICATIONS FOR THE DESIGN, FABRICATION, AND ERECTION OF STRUCTURAL STEEL FOR BUILDINGS BY THE A.I.S.C., LATEST EDITION.

5. ALL WELDING SHALL BE DONE BY CERTIFIED WELDERS IN THE SHOP OF A FABRICATOR APPROVED BY THE LOCAL BUILDING DEPARTMENT FOR WELDING IN THE SHOP. FOR SHOPS NOT APPROVED, WELDING SHALL BE CONTINUOUSLY INSPECTED BY A LICENSED DEPUTY INSPECTOR PER SECTION 1704.2. OF THE CBC.

6. CONTINUOUS INSPECTION BY A LICENSED DEPUTY INSPECTOR IS REQUIRED FOR ALL FIELD WELDING PER SEC. 1704.3 OF THE CBC, EXCEPT MINOR ITEMS WHEN APPROVED BY THE ENGINEER AND BUILDING INSPECTOR.

7. ALL FABRICATED ITEMS SHALL BE SHOP PAINTED WITH ONE COAT OF SHOP PRIMER EXCEPT FOR ITEMS ENCASED IN CONCRETE AND SURFACES TO BE WELDED. STEEL SURFACES ENCASED IN CONCRETE SHALL BE LEFT UNPAINTED, BUT FREE FROM RUST, OIL, OR OTHER DELETERIOUS MATERIALS WHEN ENCASED. STEEL ELEMENTS, INCLUDING MACHINE BOLTS AND WASHERS WHICH ARE EXPOSED TO THE ELEMENTS SHALL BE HOT DIPPED GALVANIZED PER ASTM A-123.

8. BOLT HOLES SHALL BE 1/16 INCH LARGER THAN BOLT DIAMETER UNLESS SLOTTED HOLES ARE INDICATED IN DETAILS. BOLT HOLES SHALL BE PUNCHED OR DRILLED, BURNED HOLES ARE NOT PERMITTED.

9. BOLT HEADS OR NUTS BEARING ON SLOPING SURFACES SHALL BE EQUIPPED WITH BEVELED WASHERS.

10. MACHINE BOLTS SHALL CONFORM TO ASTM A-307 AND ANCHOR BOLTS TO ASTM F 1554 UNLESS OTHERWISE NOTED ON PLANS.

CONCRETE

1. ALL CONCRETE UNLESS OTHERWISE SHOWN ON THE PLANS SHALL BE HARDROCK CONFORMING TO ASTM C-94 WITH A MINIMUM COMPRESSIVE STRENGTH AT 28 DAYS OF F'c = 3,000 PSI.

2. AGGREGATE FOR THE CONCRETE SHALL CONFORM TO ASTM C-33, INCLUDING APPENDIX "X1".

3. THE CONTRACTOR SHALL TAKE ADEQUATE PRECAUTIONS FOR MIXING, PLACING, FINISHING, CURING, AND PROTECTING CONCRETE DURING UNFAVORABLE WEATHER CONDITIONS.

4. ALL REINFORCING STEEL SHALL BE NEW STOCK DEFORMED BARS CONFORMING TO ASTM A-615, GRADE 60 EXCEPT#3 BARS MAY BE GRADE 40.. ALL WELDED REINF. STEEL SHALL BE ASTM- A706. ALL BARS SHALL BE FREE OF RUST, GREASE, MILL SCALE OR ANY OTHER MATERIALS WHICH MIGHT AFFECT ITS BOND TO THE CONCRETE ALL BAR BENDS SHALL BE MADE COLD.

5. PROVIDE 3/4" CHAMFER ON ALL EXPOSED CORNERS.

6. BAR SPLICES SHALL BE LAP SPLICES w/ MIN. 40 BAR DIAM. LAP w/ AN 18" MINIMUM, (WHICHEVER IS GREATER). STAGGER LAP SPLICES OF MULTIPLE BARS, (i.e. IN CONT. FOOTING w/ 2 HORIZ. BARS TOP AND BOTTOM STAGGER TOP BAR LAP SPLICES AND STAGGER BOTTOM BAR LAP SPLICES- SPLICES DO NOT HAVE TO BE STAGGERED BETWEEN TOP AND BOTTOM BARS).

7. REINFORCING BARS SHALL HAVE THE FOLLOWING CONCRETE COVER, (UNLESS NOTED OTHERWISE IN DETAILS): CONCRETE POURED AGAINST EARTH..................3 INCHES
CONCRETE BEAMS AND COLUMNS.......................2 INCHES
CONCRETE SLABS ABOVE GRADE........................1 INCH

8. DRYPACK SHALL BE MIXED IN THE PROPORTIONS OF 1 PART PORTLAND CEMENT TO 2-1/2 PARTS SAND WITH ENOUGH WATER TO PRODUCE A STIFF MIX. DRYPACK SHALL BE THOROUGHLY TAMPED INTO PLACE TO ENSURE A DENSE FINISH, FREE OF VOIDS.

9. THE SLUMP OF THE CONCRETE SHALL BE THE MINIMUM THAT IS PRACTICABLE. WHEN VIBRATORS ARE USED TO CONSOLIDATE THE CONCRETE, THE SLUMP SHALL NOT EXCEED 4 INCHES, OTHERWISE THE SLUMP SHALL NOT EXCEED 6 INCHES.

10. ALL CONCRETE SHALL BE ADEQUATELY CONSOLIDATED DURING PLACE-MENT AND ALL REINFORCING STEEL AND EMBEDDED ITEMS SHALL BE SECURELY TIED IN PLACE TO PREVENT DISPLACEMENT DURING CONCRETE PLACEMENT.

11. EXCEPT WHERE INDICATED OTHERWISE, ALL REINFORCING STEEL SHALL BE BENT AND PLACED IN ACCORDANCE WITH THE "CODE OF STANDARD PRACTICE AND THE SPECIFICATIONS FOR PLACING REINFORCING STEEL" OF THE CONCRETE REINFORCING STEEL INSTITUTE.

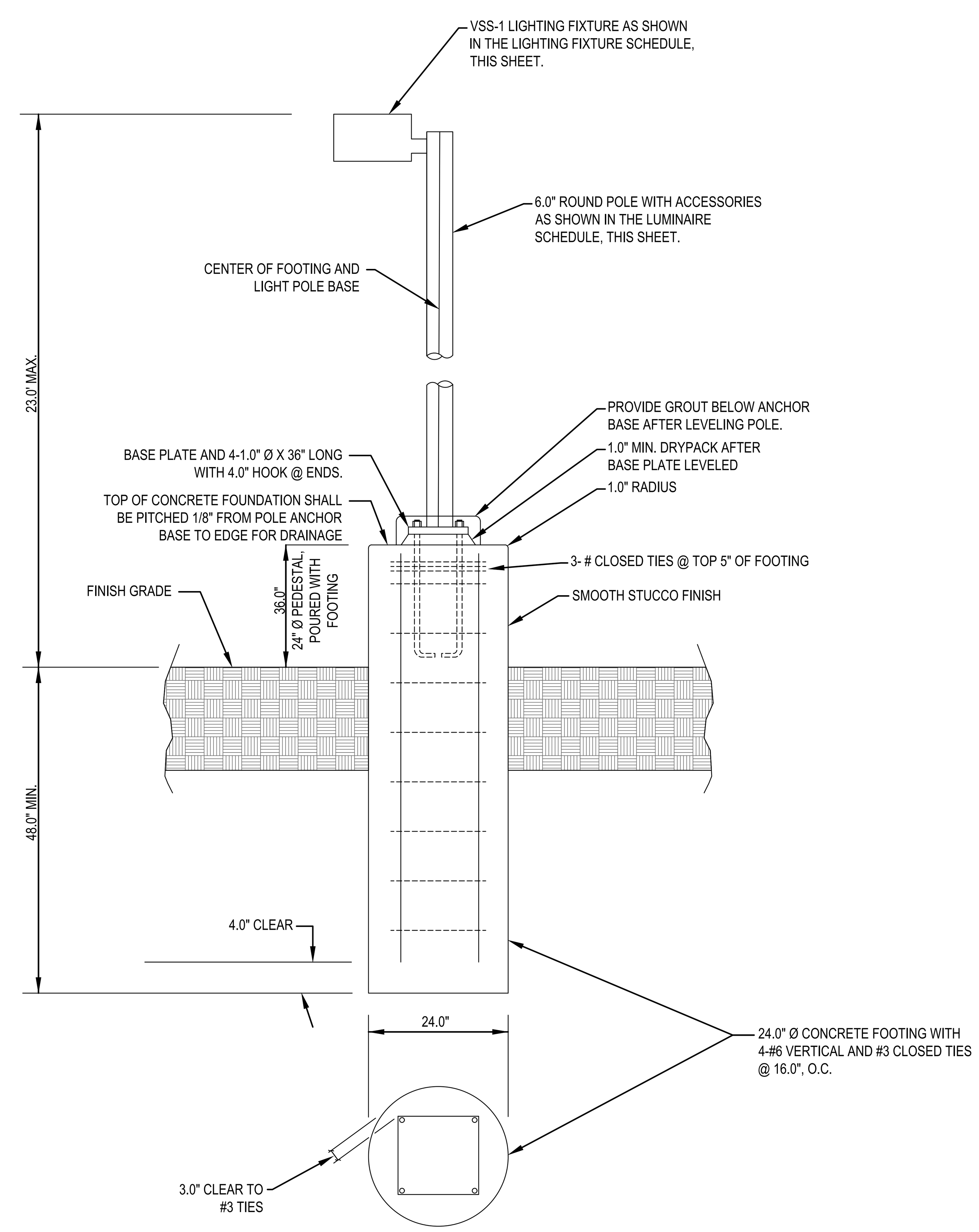

PEDESTRIAN WALKWAY POLE BASE DETAIL

SCALE: NOT TO SCALE

REV.	DESCRIPTION	CK'D	APP	DATE

PUBLIC WORKS DEPARTMENT ENGINEERING DIVISION
CITY OF SAN BUENAVENTURA

INTERIM FIRE STATION NO. 7
WALKWAY LIGHTING DETAILS

DRN. BY: DAG | DES. BY: GDK | CK'D. BY: GDK

REGISTERED PROFESSIONAL ENGINEER ORNELA HASA NO. 92225 CIVIL STATE OF CALIFORNIA

PRINCIPAL ENGINEER — DATE: 5 May 2026

CITY ENGINEER — DATE: 5/7/2026

SPEC. NUMBER 2025-010 | PROJECT NUMBER FA11-1061

April 28, 2026 | SHEET 14 OF 151 | DWG. NO. 2025-D-010

107

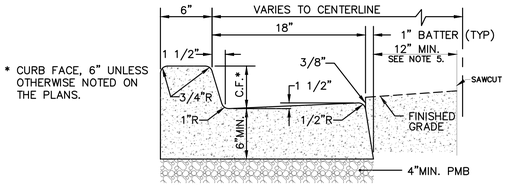

TYPE "A" CURB AND GUTTER

ALL CURB AND GUTTER SHALL BE TYPE "A" UNLESS OTHERWISE APPROVED BY THE CITY ENGINEER.

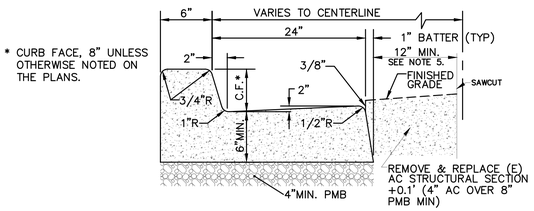

TYPE "B" CURB AND GUTTER

NOTES:

1. ALL WORK SHALL BE DONE IN ACCORDANCE WITH THE "STANDARD SPECIFICATIONS FOR PUBLIC WORKS CONSTRUCTION". REFER TO DETAIL 102 FOR SPACING OF CONTROL JOINTS
2. 4" MINIMUM PMB SHALL BE PLACED UNDER CURB AND GUTTER OR CURB. COMPACT TO 95% RELATIVE DENSITY.
3. THE FACE AND TOP OF THE CURB SHALL BE TROWELLED THEN FINISHED WITH A FINE HAIR BROOM. THE GUTTER SHALL BE TROWELLED SMOOTH ON 4 INCHES NEXT TO THE CURB.
4. CONCRETE SHALL BE 520-C-2500.
5. A MINIMUM OF 12" WIDE AC PAVEMENT REPAIR PATCH IS REQUIRED WHEN CURB AND GUTTER IS PLACED ADJACENT TO EXISTING AC PAVEMENT.

CURB AND GUTTER

107

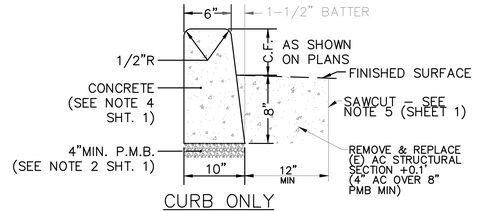

CURB ONLY

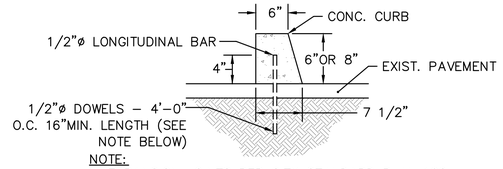

NOTE:

1. EXPANSION JOINTS PER CITY STANDARD PLAN 102.
2. WHERE APPROVED BY THE CITY ENGINEER, EPOXY RESIN MAY BE USED IN LIEU OF DOWELING.

SUPERPOSED CONCRETE CURB

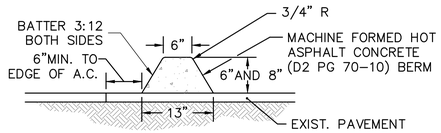

ASPHALT CONCRETE BERM

CURB AND GUTTER

104

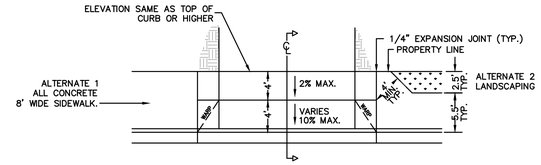

ALL NEW CONSTRUCTION (WITHOUT PARKWAY)

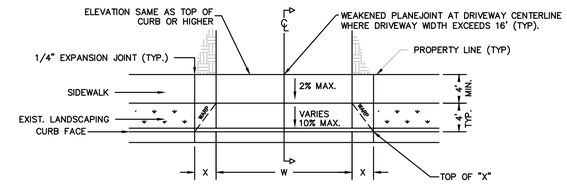

WITH EXISTING PARKWAY ONLY

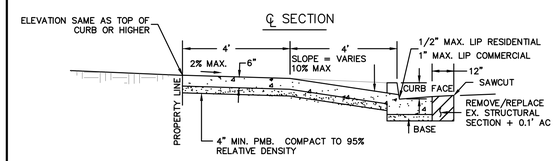

RESIDENTIAL, COMMERCIAL, INDUSTRIAL DRIVEWAY

104

NOTES:

1. TOP OF "X" AS SPECIFIED BELOW:
   - A. 3' MIN. FROM PROPERTY LINE
   - B. 5' FROM ANY ABOVE GROUND UTILITY
   - C. 15' FROM ANY STREET TREE
   - D. RESIDENTIAL DRIVEWAYS – 5' MIN. FROM B.C/E.C. ALL OTHER DEVELOPMENT – 150' MIN. FROM B.C./E.C. TO TOP OF "X".
2. APPROACHES SERVING ANY ONE PROPERTY MUST BE SEPARATED AT LEAST 16 FEET BY FULL HEIGHT CURB.
3. RESIDENTIAL ACCESS – "X" EQUALS 3 FEET FOR 6 INCH AND 8 INCH CURB FACES. COMMERCIAL/INDUSTRIAL ACCESS – "X" EQUALS 6 FEET FOR 6 INCH AND 8 INCH CURB FACES.
4. "W" EQUALS 12 FEET MIN., FOR SINGLE-FAMILY RESIDENTIAL ACCESS: 16' MAX FOR ONE CAR GARAGE, 20' MAX. FOR TWO CAR GARAGE, 24' MAX. FOR THREE CAR GARAGE. "W" EQUALS 25 FEET MIN., 35 FEET MAX., FOR MULTI-FAMILY RESIDENTIAL AND COMMERCIAL ACCESS. "W" EQUALS 35'-40' FOR INDUSTRIAL ZONED PROPERTY.
5. CONCRETE SHALL BE 520-C-2500 PER SECTION 303-5 OF STANDARD SPECS. FOR PUBLIC WORKS CONSTRUCTION.
6. SEWER LATERALS SHALL NOT BE LOCATED IN DRIVEWAY.
7. FOR CURB HEIGHT MORE THAN 8 INCHES, OBTAIN APPROVAL FROM CITY ENGINEER.

RESIDENTIAL, COMMERCIAL, INDUSTRIAL DRIVEWAY

102

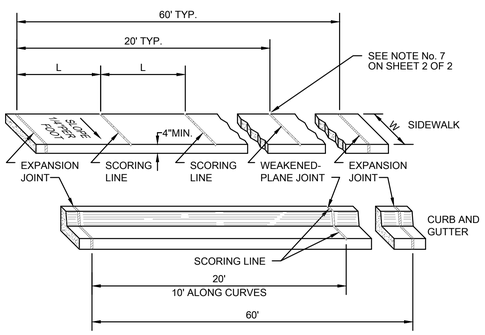

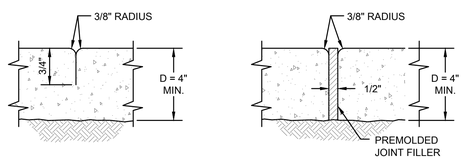

WEAKENED-PLANE JOINT
(CONTRACTION JOINT)

EXPANSION JOINT

NOTE:
WEAKENED-PLANE JOINTS CAN BE SAWCUT INTO THE CONCRETE PER SSPWC SECTION 302-6.5.4 AND 303-5.4.3

SIDEWALK DETAILS

102

SCORE LINE SCHEDULE

W	L
4'	4'
5'	5'
6'	5'
8'	4'
10'	5'

IF "W" EXCEEDS 6', ADD ADDITIONAL SCORE LINE AT 1/2 W.

NOTES

1. ALL WORK SHALL BE DONE IN ACCORDANCE WITH STANDARD SPECIFICATIONS FOR PUBLIC WORKS CONSTRUCTION EXCEPT AS OTHERWISE NOTED.
2. EXPANSION JOINTS, 1/2 INCH THICK, SHALL BE PLACED AT THE B.C. AND E.C. OF ALL RETURNS, AT THE OUTER EDGES OF DRIVEWAYS INCLUDING "X" DISTANCES, AND AT UNIFORM INTERVALS SPACED NO MORE THAN 60' APART AS SHOWN FOR ALL CONCRETE FLAT WORK.
3. WEAKENED PLANE JOINTS IN SIDEWALK SHALL BE MINIMUM 3/4" IN DEPTH AND SHALL BE CONSTRUCTED AT EQUAL SPACING BETWEEN EXPANSION JOINTS IN WALKS AND GUTTERS.
4. SCORING LINES, IN CURBS SHALL BE MINIMUM 3/4" DEPTH AND CONSTRUCTED AT WEAKENED PLANE JOINTS IN THE GUTTER AND IN THE WALK AS SHOWN.
5. JOINTS IN THE CURB AND GUTTER SHALL ALIGN WITH CORRESPONDING JOINTS IN THE WALK.
6. LONGITUDINAL SCORING LINES WILL BE REQUIRED IN WALKS WIDER THAN 6 FEET.
7. SIDEWALK SHALL BE PLACED ON 4" OF FILL WITH SAND EQUIVALENT TO 20 OR HIGHER COMPACTED TO 90% MINIMUM.
8. FOR THE INSTALLATION OF ABOVE AND BELOW GROUND UTILITIES IN NEW OR EXISTING SIDEWALKS, THE SIDEWALK SHALL BE CONSTRUCTED FULL WIDTH AND TO THE NEAREST COLD JOINT OR PERPENDICULAR SCORE MARK.
9. REPAIR ANY DAMAGED EXISTING SIDEWALK ADJACENT TO NEW SIDEWALK.

SIDEWALK DETAILS

101

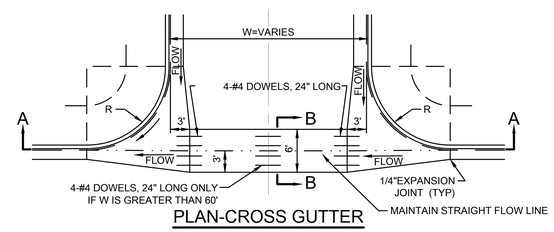

PLAN-CROSS GUTTER

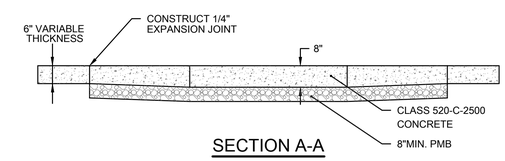

SECTION A-A

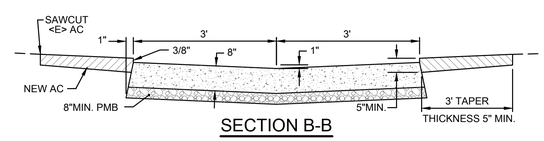

SECTION B-B

CROSS GUTTER

101

NOTES:

1. ALL WORK SHALL BE DONE IN ACCORDANCE WITH SUBSECTION 303-5 OF STANDARD SPECIFICATIONS FOR PUBLIC WORKS CONSTRUCTION EXCEPT AS OTHERWISE NOTED.
2. BASE MATERIAL, 8" THICK SHALL BE PLACED UNDER ALL CONCRETE. COMPACT TO 95% REL. DENSITY.
3. DOWELS SHALL CONSIST OF NO.4 REBAR ASTM A615 GRADE 40, 24 INCHES LONG AND SET 18 INCHES CENTER TO CENTER EXTENDING EQUAL DISTANCES INTO THE ADJOINING SLABS. A DOWEL CAP MUST FIT SNUGLY OVER THE DOWEL ON ONE END TO PREVENT ADHESION TO THE CONCRETE AND TO PERMIT HORIZONTAL MOVEMENT OF THE BAR.
4. PARKING LOT CROSS GUTTER SHALL BE 3' WIDE, MAINTAIN 1" FALL TO CENTER LINE.
5. CROSS GUTTERS SHALL NOT BE USED UNLESS OTHERWISE APPROVED BY THE CITY ENGINEER.
6. FOR JOINT SPACING SEE STANDARD DETAIL No. 102.

CROSS GUTTER

REV.	DESCRIPTION	CK'D	APP	DATE

PUBLIC WORKS DEPARTMENT ENGINEERING DIVISION

CITY OF SAN BUENAVENTURA

INTERIM FIRE STATION NO. 7

CURB, GUTTER, & SIDEWALK STANDARD DETAILS

DRN. BY: DAG | DES. BY: GDK | CK'D. BY: GDK

PRINCIPAL ENGINEER — DATE: 5 May 2026

CITY ENGINEER — DATE: 5/7/2026

REGISTERED PROFESSIONAL ENGINEER — DANIELA HASA — NO. 92225 CIVIL — STATE OF CALIFORNIA

SPEC. NUMBER 2025-010 | PROJECT NUMBER FA11-1061

April 28, 2026 | SHEET 15 OF 151 | DWG. NO. 2025-D-010

006

FIG. 1

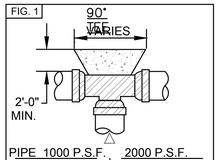

PIPE	1000 P.S.F.	2000 P.S.F.
4"	4.0 sq. ft.	2.0 sq. ft.
6"	8.0 sq. ft.	4.0 sq. ft.
8"	13.0 sq. ft.	7.0 sq. ft.
10"	22.0 sq. ft.	11.0 sq. ft.
12"	31.0 sq. ft.	15.0 sq. ft.
* 14"	42.0 sq. ft.	21.0 sq. ft.
* 16"	54.0 sq. ft.	27.0 sq. ft.

FIG. 2

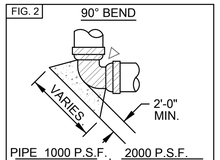

PIPE	1000 P.S.F.	2000 P.S.F.
4"	5.0 sq. ft.	3.0 sq. ft.
6"	11.0 sq. ft.	5.0 sq. ft.
8"	19.0 sq. ft.	9.0 sq. ft.
10"	30.0 sq. ft.	15.0 sq. ft.
12"	43.0 sq. ft.	22.0 sq. ft.
* 14"	59.0 sq. ft.	29.0 sq. ft.
* 16"	76.0 sq. ft.	38.0 sq. ft.

FIG.3

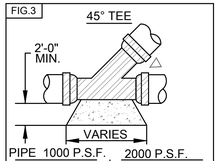

PIPE	1000 P.S.F.	2000 P.S.F.
4"	3.0 sq. ft.	1.0 sq. ft.
6"	6.0 sq. ft.	3.0 sq. ft.
8"	10.0 sq. ft.	5.0 sq. ft.
10"	16.0 sq. ft.	8.0 sq. ft.
12"	23.0 sq. ft.	12.0 sq. ft.
* 14"	32.0 sq. ft.	16.0 sq. ft.
* 16"	41.0 sq. ft.	21.0 sq. ft.

FIG.4

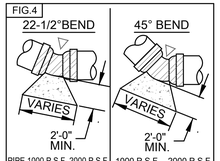

PIPE	1000 P.S.F.	2000 P.S.F.	1000 P.S.F.	2000 P.S.F.
4"	1.0 sq. ft.	1.0 sq. ft.	3.0 sq. ft.	1.0 sq. ft.
6"	3.0 sq. ft.	1.5 sq. ft.	6.0 sq. ft.	3.0 sq. ft.
8"	5.0 sq. ft.	2.5 sq. ft.	10.0 sq. ft.	5.0 sq. ft.
10"	8.0 sq. ft.	4.0 sq. ft.	16.0 sq. ft.	8.0 sq. ft.
12"	12.0 sq. ft.	6.0 sq. ft.	23.0 sq. ft.	12.0 sq. ft.
*14"	16.0 sq. ft.	8.0 sq. ft.	32.0 sq. ft.	16.0 sq. ft.
*16"	21.0 sq. ft.	10.0 sq. ft.	41.0 sq. ft.	21.0 sq. ft.

* ENGINEER TO DETERMINE CONFIGURATION
◁ DIRECTION OF THRUST

THRUST BLOCKING

006

FIG.5

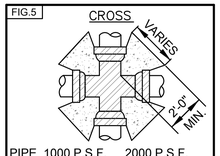

PIPE	1000 P.S.F.	2000 P.S.F.
4"	2.0/ea. sq. ft.	1.0/ea. sq. ft.
6"	4.0/ea. sq. ft.	2.0/ea. sq. ft.
8"	7.0/ea. sq. ft.	3.0/ea. sq. ft.
10"	11.0/ea. sq. ft.	5.0/ea. sq. ft.
12"	18.0/ea. sq. ft.	9.0/ea. sq. ft.
*14"	21.0/ea. sq. ft.	10.0/ea. sq. ft.
*16"	27.0/ea. sq. ft.	13.0/ea. sq. ft.

FIG.6

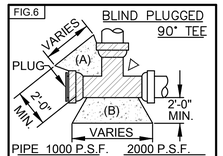

PIPE	1000 P.S.F. (A)	1000 P.S.F. (B)	2000 P.S.F. (A)	2000 P.S.F. (B)
4"	3.0-3.0 sq. ft.		1.0-1.0 sq. ft.	
6"	5.0-5.0 sq. ft.		3.0-3.0 sq. ft.	
8"	9.0-9.0 sq.ft.		5.0-5.0 sq. ft.	
10"	15.0-15.0 sq. ft.		8.0-8.0 sq. ft	
12"	21.0-21.0 sq.ft.		11.0-11.0 sq. ft.	
*14"	29.0-29.0 sq. ft.		15.0-15.0 sq. ft.	
*16"	38.0-38.0 sq. ft.		19.0-19.0 sq. ft.	

FIG.7

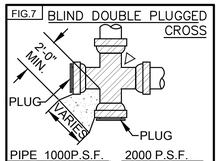

PIPE	1000P.S.F.	2000 P.S.F.
4"	5.0 sq. ft.	3.0 sq. ft.
6"	11.0 sq. ft.	5.0 sq. ft.
8"	19.0 sq. ft.	9.0 sq. ft.
10"	30.0 sq. ft.	15.0 sq. ft.
12"	43.0 sq. ft.	22.0 sq. ft.
*14"	59.0 sq. ft.	29.0 sq. ft.
*16"	76.0 sq. ft.	38.0 sq. ft.

FIG.8

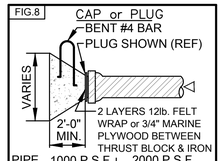

PIPE	1000 P.S.F.	2000 P.S.F.
4"	4.0 sq. ft.	2.0 sq. ft.
6"	8.0 sq. ft.	4.0 sq. ft.
8"	14.0 sq. ft.	7.0 sq. ft.
10"	22.0 sq. ft.	11.0 sq. ft.
12"	30.0 sq. ft.	15.0 sq. ft.
*14"	42.0 sq. ft.	21.0 sq. ft.
*16"	55.0 sq. ft.	27.0 sq. ft.

* ENGINEER TO DETERMINE CONFIGURATION
◁ DIRECTION OF THRUST

THRUST BLOCKING

006

FIG. 9

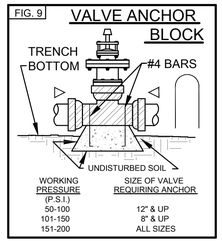

WORKING PRESSURE (P.S.I.)	SIZE OF VALVE REQUIRING ANCHOR
50-100	12" & UP
101-150	8" & UP
151-200	ALL SIZES

FIG.10

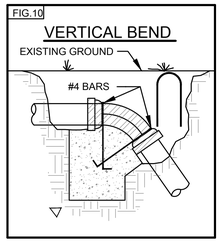

NOTE: SHAPE AND DIMENSION OF FIGS. 9 & 10 ANCHOR BLOCKS TO BE DETERMINED BY THE ENGINEER

FIG.11

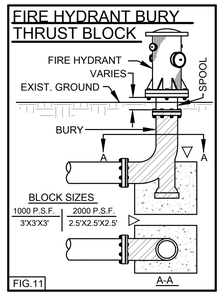

FIG.12

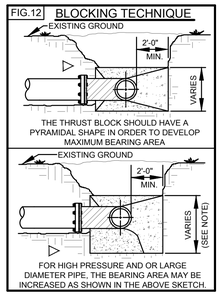

◁ DIRECTION OF THRUST

THRUST BLOCKING

009

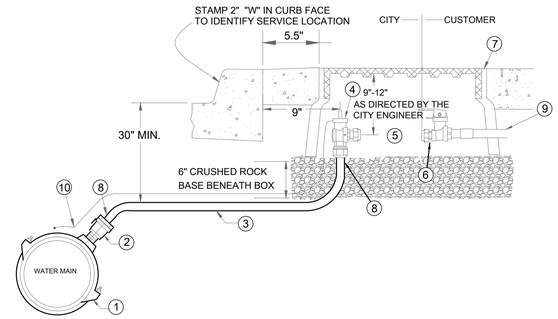

LEGEND

1. SERVICE SADDLE DOUBLE STRAP, INSTALLED PER MANUFACTURER'S RECOMMENDATIONS: FORD 202B SERIES OR JONES J979 (DIP, ACP), FORD 202BS SERIES OR JONES J969 (PVC), ROMAC 202N–H SERIES (HDPE).
2. CORPORATION STOP W/STAINLESS STEEL INSERTS: FORD FB1100–4–NL–CTS OR JONES 1935
3. 1 INCH ø HDPE PIPE. (CTS). PER NOTE G ON SHEET 3.
4. ANGLE BALL METER VALVE W/ 1"x1" ANGLE METER STOP AND STAINLESS STEEL INSERTS FORD BA–43–444W–NL–CTS OR JONES 1963W
5. METER, TO BE FURNISHED BY CITY.
6. CUSTOMER SERVICE VALVE: FORD B13–444W–NL (HANDLE W/ HB–34) OR JONES 1908.
7. METER BOX: CHRISTY FIBRELITE FL12TBOX12 OR FL12TBOX18 AS DIRECTED BY THE CITY ENGINEER & FL12D LID (GREY POLYMER LID).
8. USE COMPRESSION FITTING WITH STAINLESS STEEL INSERTS TO CONNECT TO 1" ø HDPE. ANY RISER ABOVE GROUND SHALL BE TYPE K COPPER.
9. CUSTOMER SERVICE LINE PER PLUMBING CODE. ALL ADJUSTMENTS TO CUSTOMER SERVICE LINE SHALL BE MADE OUTSIDE BOX.
10. LOCATING WIRE PER NOTE I ON SHEET 3.

1" WATER SERVICE CONNECTION WITH 3/4" OR 1" METER

009

GENERAL NOTES

A. THE WATER SERVICE SHALL EXTEND PERPENDICULAR TO THE CENTERLINE OF THE STREET FROM THE WATER MAIN TO THE WATER METER.

B. THE METER WILL BE FURNISHED BY THE CITY AND INSTALLED AND PAID FOR BY THE CONTRACTOR. THE CONTRACTOR SHALL CONNECT SERVICE TO THE CUSTOMER SERVICE VALVE. FOR CAPITAL IMPROVEMENT PROJECTS, THE METER WILL BE FURNISHED AND PAID FOR BY THE CITY AND INSTALLED BY THE CONTRACTOR.

C. ALL MATERIALS SPECIFIED ON THIS STANDARD SHALL BE AS SHOWN OR APPROVED EQUAL AUTHORIZED BY THE CITY ENGINEER.

D. ALL CITY COPPER FITTINGS SHALL COMPLY WITH CALIFORNIA ASSEMBLY BILL 1953 (LEAD FREE FIXTURES).

E. RUBBER WASHERS REQUIRED AT METER COUPLINGS.

F. FOR EXISTING SERVICES, CONTRACTOR SHALL INSTALL CUSTOMER SERVICE VALVE AS SHOWN AND ADJUST CUSTOMER SERVICE LINE OUTSIDE BOX TO CONNECT TO METER.

G. HDPE SDR9 (5100 SERIES) PIPE SHALL CONFORM TO ALL APPLICABLE REQUIREMENTS OF THE LATEST REVISIONS FOR THE FOLLOWING STANDARDS: AWWA C-901, ASTM D2737, ASTM D3350, NATIONAL SANITATION (NSF#14 & 61), INTERNATIONAL ASSOCIATION OF PLUMBING AND MECHANICAL OFFICIALS, UNIFORM PLUMBING CODE, PLASTIC PIPE INSTITUTE, PLASTIC PIPE & FITTING INSTITUTE, PLASTIC PIPE & FITTINGS ASSOCIATION.

H. INSERT STIFFENERS SHALL BE USED AT ALL HDPE TUBING CONNECTIONS. INSERTS SHALL BE SOLID 304 TUBULAR STAINLESS STEEL, DIMPLED & FLANGED TO RETAIN REPLACEMENT WITHIN THE SERVICE LINE & COMPATIBLE FOR USE WITH OTHER FITTINGS.

I. LOCATING WIRE SHALL BE ATTACHED TO THE EXISTING LOCATING WIRE ON WATERMAIN OR TO THE SERVICE SADDLE WITH AN EXTRA STAINLESS STEEL 5/16" NUT (IF EXISTING TRACING WIRE CANNOT BE LOCATED), EXTEND ALONG THE SERVICE LATERAL AND INTO THE METER BOX. LOCATING WIRE SHALL BE PLASTIC COATED 10 GAUGE SOLID COATED COPPER. EXISTING LOCATING WIRE SHALL NOT BE SPLICED.

J. NO DIRECT TAPS ON THE MAIN LINE ARE ALLOWED.

K. WHEN CONNECTING TO CUSTOMER SERVICE LINE, USE COPPER FITTING (SOLDERED) IF EXISTING CUSTOMER SERVICE LINE IS COPPER, USE COMPRESSION COUPLING IF EXISTING CUSTOMER LINE IS GALVANIZE OR STEEL PIPE, OR USE "GLUE" IF EXISTING CUSTOMER SERVICE LINE IS PVC.

WATER SERVICE CONNECTION GENERAL NOTES

010

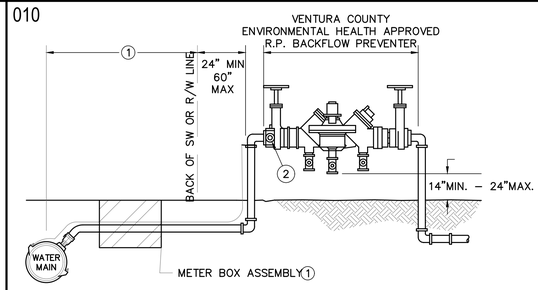

LEGEND

1. CONSTRUCT SERVICE LINE AND WATER METER ASSEMBLY PER STANDARD DETAIL 009.
2. 2" MINIMUM BRASS NIPPLE.

NOTES

1. SEE CITY STANDARD DETAIL 001 – GENERAL WATER NOTES, 024 – AMI ANTENNA INSTALLATION
2. WHEN INSTALLED IN LOCATIONS SUBJECT TO DAMAGE FROM VEHICLES, BOLLARDS SHALL BE INSTALLED AS DIRECTED BY CITY ENGINEER.
3. ABOVE GROUND ASSEMBLY SHALL BE PAINTED BY CONTRACTOR WITH ONE COAT PRIMER AND TWO COATS HUNTERGREEN ENAMEL.
4. ALL IRRIGATION AND COMMERCIAL SERVICES REQUIRE BACKFLOW PREVENTERS. ALL RESIDENTIAL METERS LARGER THAN 1–INCH REQUIRE BACKFLOW PREVENTERS.

1.0" BACKFLOW ASSEMBLY INSTALLATION

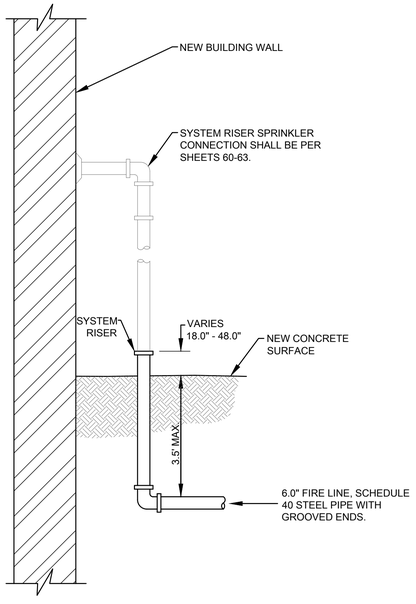

FIRE PROTECTION SYSTEM RISER DETAIL

REV.	DESCRIPTION	CK'D	APP	DATE

PUBLIC WORKS DEPARTMENT ENGINEERING DIVISION

CITY OF SAN BUENAVENTURA

INTERIM FIRE STATION NO. 7

WATER STANDARD DETAILS

DRN. BY: DAG	DES. BY: GDK	CK'D. BY: GDK

PRINCIPAL ENGINEER — DATE: 5 May 2026

CITY ENGINEER — DATE: 5/7/2026

REGISTERED PROFESSIONAL ENGINEER — DAMELA HASA — NO. 92225 — CIVIL — STATE OF CALIFORNIA

SPEC. NUMBER 2025-010	PROJECT NUMBER FA11-1061
April 28, 2026	SHEET 16 OF 151	DWG. NO. 2025-D-010

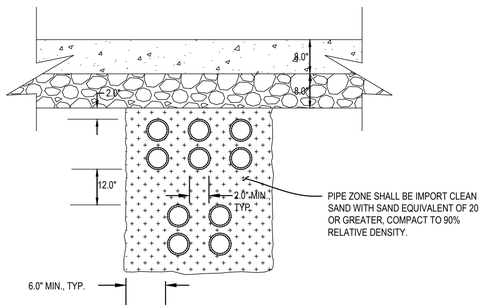

DRY UTILITY BURIAL DETAIL

112

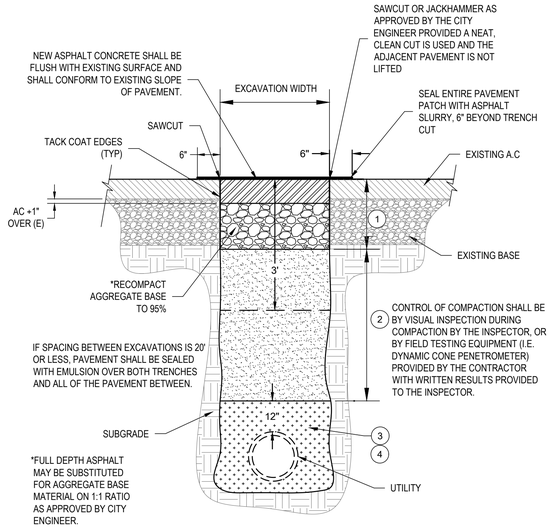

BACKFILL ONLY FOR SMALL RECTANGULAR EXCAVATIONS NO LARGER THAN 32 S.F.

TRACING WIRE FOR LOCATING

TRENCH BACKFILL/ AC REPAIR

112

CONSTRUCTION NOTES

LEGEND

1. STRUCTURAL SECTION - MATCH EXISTING AC THICKNESS + 1"; MATCH EXISTING BASE THICKNESS. MINIMUM SHALL BE 4" AC OVER 8" PMB. FOR P.C.C. PAVING, MINIMUM THICKNESS IS 8" (EXCEPT AC OVERLAY ON P.C.C. SHALL MATCH EXISTING).
2. BACKFILL - NATIVE OR IMPORT, COMPACTED TO 90% RELATIVE DENSITY. OR 100-E-100 SLURRY AS APPROVED BY THE CITY ENGINEER. COMPACTION TEST REPORT FROM A CERTIFIED SOIL LAB MUST BE PROVIDED TO CITY INSPECTOR PRIOR TO AC OR PCC PAVING.
3. PIPE ZONE - IMPORT CLEAN SAND WITH SAND EQUIVALENT OF 20 OR GREATER. COMPACT TO 90% RELATIVE DENSITY. SEE STANDARD DETAIL 113 FOR UTILITY OR STRUCTURE.
4. IF SAND EQUIVALENT IS 20 OR GREATER, JETTING MAY BE USED IN PIPE ZONE ONLY WHEN APPROVED BY THE CITY ENGINEER.
5. STREET SHALL BE SAWCUT. IF SAWCUT IS DAMAGED AFTER UTILITY IS INSTALLED AND BACKFILL IS COMPLETE, THE STREET SHALL BE RE-SAWCUT SO THAT A CLEAN EDGE REMAINS FOR PAVING. SAWCUT A MINIMUM OF 1/2 PAVEMENT THICKNESS. FOR P.C.C. OVERLAYED BY ASPHALT, SAWCUT THICKNESS OF P.C.C. PLUS A.C. THICKNESS. ALL ASPHALTIC CONCRETE JOINTS SHALL BE SEALED WITH ASPHALTIC EMULSION, 6" MINIMUM EITHER SIDE BEFORE AND AFTER PAVEMENT IS PLACED. JOINTS OF NEW ASPHALTIC CONCRETE SHALL BE FLUSH WITH THE EXISTING PAVEMENT.
6. RECENTLY RESURFACED/MORATORIUM STREETS: FOR PERPENDICULAR TRENCHES, SEAL PAVEMENT WITH SLURRY SEAL CONSISTING OF MIX DESIGN APPROVED BY CITY ENGINEER, OVER ENTIRE TRENCH WIDTH PLUS AN ADDITIONAL 6' ON EITHER SIDE OF TRENCH CENTERLINE. FOR LONGITUDINAL TRENCHES,MILL AND FILL ENTIRE AREA ADJACENT TO TRENCH AND EXTEND TO NEXT LANE LINE OR CURB/GUTTER AS APPLICABLE (REPAIR ENTIRE LANES THAT ARE IMPACTED BY TRENCH CUT) UNLESS OTHERWISE APPROVED BY THE CITY ENGINEER. PAVEMENT SHALL BE CONTINUOUS WITH JOINTS ONLY WHERE NEW AND EXISTING ASPHALT/CONCRETE JOIN.
7. THE CONTRACTOR SHALL REPLACE TRAFFIC STRIPING, STREET MARKINGS, AND CURB MARKINGS REMOVED OR DAMAGED BY THE WORK WITH LIKE KIND MATERIALS TO MATCH EXISTING STRIPING.
8. FOR MULTIPLE TRENCH REPAIR LOCATIONS ADJACENT TO EACH OTHER, DISTANCE BETWEEN REPAIRS SHALL BE NO LESS THAN 4' OTHERWISE AREA BETWEEN TRENCHES SHALL BE A PART OF THE REPAIR. FOR MULTIPLE LOCATIONS LESS THAN 32 SQ FT IN SIZE. THE PAVEMENT SHALL BE SEALED WITH A TYPE II SLURRY SEAL TO INCLUDE THE FULL WIDTH (+1') AND LENGTH (+1') OF ALL TRENCH CUTS.
9. TRENCH REPAIR MUST BE UNIFORM AND SQUARE. ZIG ZAG TRENCHES ARE NOT ALLOWED.

NOTE:
TRENCH BACKFILL DETAILS ARE APPLICABLE FOR ALL UNDERGROUND UTILITY INSTALLATIONS INCLUDING, WITHOUT LIMITATION; TELECOMMUNICATIONS (CABLE, T.V., PHONE, ETC.), GAS, ELECTRIC, AND ALL UTILITIES INSTALLING CONDUITS WITHIN CITY STREETS WITHOUT A FRANCHISE AGREEMENT WITH THE CITY.

TRENCH BACKFILL

112

GENERAL NOTES

SPECIFICATIONS:
ALL BACKFILL SHALL BE PLACED AND TESTED IN ACCORDANCE WITH STANDARD SPECIFICATIONS FOR PUBLIC WORKS CONSTRUCTION EXCEPT AS OTHERWISE NOTED HEREON.

MAXIMUM LIFTS*

A. MECHANICAL COMPACTION

LIFT	EQUIPMENT	NOTES
3.00'	HYDROHAMMER	(NOT TO BE USED WITHIN 4' OF ANY PIPE)
1.50'	VIBRATORY	(NOT TO BE USED WITHIN 2' OF ANY PIPE)
1.00'	ROLLING STOCK	WALK BEHIND AND MINI.
.67'' = 6''	HAND TAMPER	
.33' = 4''	HAND VIBRATORY PLATE	

B. HYDRAULIC DENSIFICATION

2.00'	JETTING UNDER PRESSURE	(ONLY USED WHEN APPROVED BY CITY ENGINEER)

NOTE: EITHER FILL OR BEDDING MUST BE FREE DRAINING.

*A LIFT IS ONE LAYER OF MATERIAL PLACED, PROCESSED, AND COMPACTED AS A UNIT AT OPTIMUM MOISTURE CONTENT.

CONTROL OF COMPACTION
VISUAL INSPECTION AND SOIL TESTING AS REQUIRED BY THE INSPECTOR. COMPACTION TEST REPORT FROM CERTIFIED SOIL LAB IS REQUIRED FOR ALL WORK COMPLETED WITHOUT CITY INSPECTOR VISUAL PRIOR TO AC OR PCC RESURFACING

ROCK IN BACKFILL
SUFFICIENT SAND AND FINES MUST BE MIXED INTO THE BACKFILL TO FILL VOIDS WHEN SOIL CONTAINS ROCKS. MAXIMUM SIZE ROCK IN FILL IS 6 INCHES, BROKEN PCC AND AC IS ALLOWED IN NATIVE BACKFILL ONLY, WITH 6 INCH MAXIMUM SIZE.

LABORATORY MAXIMUM DENSITY

METHOD 1: LABORATORY MAXIMUM DENSITY OF SOIL SHALL BE DETERMINED BY ASTM D1557-91. (COMPACTION EFFORT EQUALS 33,750 FT.-LBS. PER CUBIC FOOT.)

METHOD 2: LABORATORY MAXIMUM DENSITY OF BASE AND SUB-BASE MATERIALS SHALL BE DETERMINED BY TEST METHOD NO. CALIF. 216, METHOD A.

SAND EQUIVALENT
SAND EQUIVALENT SHALL BE DETERMINED BY TEST METHOD NO. CA. 217.

FIELD DENSITY
FIELD DENSITY OF SOIL SHALL BE DETERMINED BY ASTM D1556-00, USING THE BASE PLATE AND MAKING SUITABLE ADJUSTMENTS FOR VOLUMES OF ROCKS IN THE TEST HOLE, OR BY TEST METHOD NO. CALIF. T-231-B, PARTS A-E AND G FOR NUCLEAR DEVICES.
THE WORDS "RELATIVE COMPACTION" OR "RELATIVE DENSITY" SHALL MEAN THE RATIO OF THE FIELD DENSITY TO THE LABORATORY MAXIMUM DENSITY EXPRESSED IN PERCENT.

TRENCH BACKFILL

004

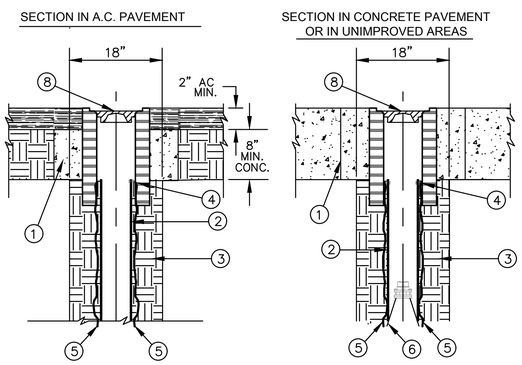

LEGEND

1. CONCRETE RING OR CONCRETE PAVEMENT SEE TOP VIEW, SHEET 2/2.
2. 8" O.D., SDR 35 PIPE DIAMETER (SEE NOTE 7, SHEET 2/2).
3. NATIVE BACKFILL AS REQUIRED TO MATCH EXISTING (COMPACT TO 90% RELATIVE COMPACTION).
4. 5/16" GALVANIZED HEX. BOLT AND NUT.
5. 10 GAUGE COATED COPPER LOCATION WIRE TO BE USED WITH NON-METALLIC WATER PIPE. WIRE TO RUN ALONG (OUTSIDE) VALVE STACK THE ENTIRE LENGTH. CONNECT 10 GAUGE WIRE TO 5/16" BOLT ON OUTSIDE OF VALVE STACK
6. VALVE STACK TO BE ATTACHED TO VALVE WITH PIPE TAPE. 1/2" ° WEEP HOLES ON STACK AT VALVE TO BE PROVIDED.

VALVE BOX ASSEMBLY

020

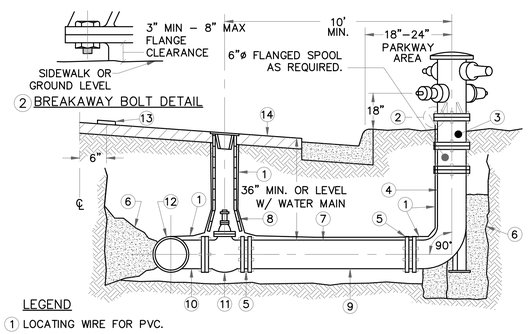

LEGEND

1. LOCATING WIRE FOR PVC.
2. 6–HOLLOW BREAKWAY BOLTS WITH NUTS ON UPPER FLANGE (SEE DETAIL 2).
3. 6" DIAMETER FLANGED BREAKOFF "SPOOL". LOCATE FRACTURE LINE ABOVE HARDSCAPE.
4. 6"x36" BURY WITH FLANGE RISER AND MECHANICAL JOINT OR AS APPROVED BY CITY ENGINEER.
5. MECHANICAL JOINT WITH MJ RETAINER GLANDS.
6. POUR THRUST BLOCK AGAINST UNDISTURBED SOIL PER STD. DET. 006.
7. PIPELINE PROTECTIVE COVERING PER DETAIL 001.
8. VALVE BOX AND COVER PER STANDARD DETAIL 004.
9. 6" D.I.P. OR PVC.
10. HYDRANT TEE U–590, AS MANUFACTURED BY U.S. PIPE FOUNDRY CO. OR AS APPROVED BY CITY ENGINEER. OTHERWISE HYDRANT TEE SHALL BE MECH. TYTON JOINT x 6" FLG. TEE.
11. 6" FLANGE x MECH. JOINT RESILIENT WEDGE GATE VALVE.
12. WATER MAIN.
13. BLUE REFLECTOR SEE SHEET 2.
14. FINISHED PAVEMENT.
15. FIRE HYDRANT BREAKOFF CHECK VALVE. SEE SHEET 2 OF 4.

FIRE HYDRANT

020

GENERAL FIRE HYDRANT NOTES

1. 3–WAY HYDRANTS SHALL BE USED UNLESS OTHERWISE NOTED AND SHALL HAVE ONE 2–1/2" UPPER HOSE OUTLET AND TWO 4" LOWER STEAMER OUTLET.
2. FIRE HYDRANT AND BURY SHALL BE CALIFORNIA TYPE "WET BARREL" HYDRANT CONFORMING TO AWWA AND SHALL BE SELECTED FROM THE FOLLOWING LIST OR AS APPROVED BY CITY ENGINEER:
   – AVK SERIES 2470 (RESIDENTIAL) 2490 (COMMERCIAL) OR 2420 (INDUSTRIAL)
   – JONES 4040 OR 4065 SERIES
   – CLOW SERIES 850 (RESIDENTIAL) 860 (COMMERCIAL) OR 865 (INDUSTRIAL)
3. FIRE HYDRANTS SHALL BE LOCATED 3' MIN. – 5' MAX. DISTANCE BEYOND THE CURB RETURN. FOR 25' AND 35' CURB RADII, LOCATE HYDRANT 3' TO 4' INSIDE CURB RETURN. IF LOCATED AT OTHER THAN A STREET INTERSECTION, HYDRANTS SHALL BE LOCATED AT PROPERTY LINE EXTENSIONS, OR AS NOTED ON PLANS.
4. ALL FIRE HYDRANTS ARE TO BE ROTATED AT THE TIME OF INSTALLATION SO THAT HYDRANT OUTLETS ARE POSITIONED 45° SYMMETRICALLY TO A THEORETICAL CENTER LINE PERPENDICULAR TO THE NEAREST VEHICLE ROADWAY OR PATH.
5. FIRE HYDRANTS SHALL BE PAINTED WITH TWO COATS OF SAFETY YELLOW PAINT "PPG AMERSHIELD VOC" OR AS APPROVED BY CITY ENGINEER.
6. A SINGLE BI–DIRECTIONAL BLUE REFLECTOR SHALL BE INSTALLED 6" FROM CENTERLINE OF STREET ADJACENT TO FIRE HYDRANT.
7. HYDRANT TO HAVE BRASS OR CAST IRON CAPS (NO PLASTIC). CONTRACTOR SHALL NOT REMOVE CHAINS.
8. CONTRACTOR SHALL PROVIDE A CERTIFIED FLOW TEST FOR EACH HYDRANT – SEE STD. DETAIL 001.
9. IF NOTED, 2–WAY HYDRANTS SHALL BE USED IN RESIDENTIAL AREAS OR AS SPECIFIED BY THE CITY ENGINEER. 2 WAY HYDRANTS SHALL HAVE ONE 2 1/2" UPPER HOSE OUTLET AND ONE 4" LOWER STEAMER OUTLETS.

REV.	DESCRIPTION	CK'D	APP	DATE

PUBLIC WORKS DEPARTMENT ENGINEERING DIVISION
CITY OF SAN BUENAVENTURA

INTERIM FIRE STATION NO. 7
CONSTRUCTION DETAILS

DRN. BY: DAG | DES. BY: GDK | CK'D. BY: GDK

PRINCIPAL ENGINEER — DATE: 5 May 2026

CITY ENGINEER — DATE: 5/7/2026

REGISTERED PROFESSIONAL ENGINEER — DAMELA HASA — NO. 92225 — CIVIL — STATE OF CALIFORNIA

SPEC. NUMBER 2025-010 | PROJECT NUMBER FA11-1061

April 28, 2026 | SHEET 17 OF 151 | DWG. NO. 2025-D-010

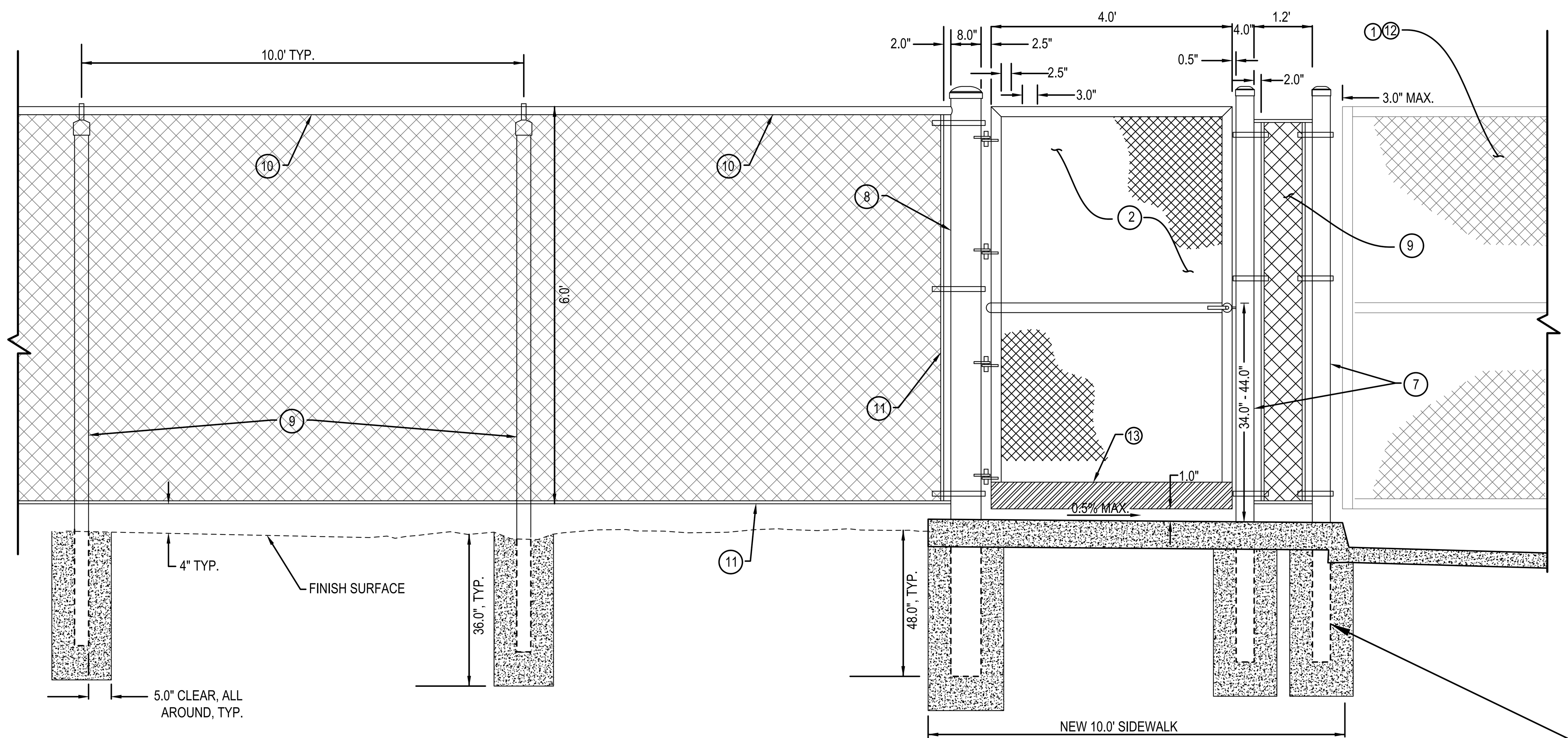

MAN GATE AND CHAIN LINK FENCE PANEL DETAIL

NOT TO SCALE

NOTE:
ACCESSIBLE MAN GATE SHALL BE IN COMPLIANCE WITH THE 2022 CBC CHAPTER 11B, WITH THE FOLLOWING SECTIONS:

1. GATE CLEAR OPENING PER CBC 11B-404.2.3.
2. GATE HARDWARE PER CBC 11B-404.2.7.
3. GATE THRESHOLD PER CBC 11B-404.2.5.
4. GATE CLOSERS & OPERATING FORCE PER CBC 11B-404.2.8 AND 11B-404.2.9.
5. MANEUVERING CLEARANCE PER CBC 11B-404.2.4.
6. GROUND SURFACE PER CBC 11B-302 AND 11B-403.3.

CONSTRUCTION NOTES

1. CONTRACTOR SHALL REMOVE AND STORE EXISTING GATE SYSTEM (CANTILEVER GATE, FRAME, ROLLERS, FENCE HARDWARE, OPERATOR, OPERATOR PAD AND POWER, ACCESS CONTROL COMPONENTS, KEYPAD AND PAD) PER PLAN AND SPECIFICATIONS. PROTECT AND STORE IN SECURE, DRY LOCATION. ALL WIRING, HARDWARE, AND CONDUIT TERMINATIONS SHALL BE CLEARLY LABELED AND PRESERVED FOR REINSTALLATION.
2. THE CONTRACTOR SHALL CONSTRUCT A MAN GATE STEEL DOOR FRAME WITH MESH AND POST HINGES, PER PLAN AND THE SPECIFICATION. THE STEEL DOOR FRAME SHALL BE 2.0" DIAMETER, GALVANIZED STEEL, 11-GAUGE. THE CHAIN LINK MESH SHALL BE 2-INCH, GALVANIZED STEEL, 9-GAUGE. POST HINGES SHALL BE 2-3/8" GALVANIZED STEEL.
3. THE CONTRACTOR SHALL INSTALL NEW DETECTOR LOOP PER THE GATE OPERATOR MANUFACTURER'S RECOMMENDATIONS AND PER THESE PLANS AND SPECIFICATIONS. THE CITY PUBLIC WORKS INSPECTOR SHALL VERIFY THE LOCATION OF THE NEW DETECTOR LOOP PRIOR TO INSTALLATION.
4. THE CONTRACTOR SHALL REMOVE AND RECONSTRUCT FENCE POST WITH U-BOLTS, FOOTING, AND FENCE PANELS, PER PLAN AND THE SPECIFICATION, AND PER MAN GATE AND FENCE PANEL DETAIL SHOWN ON THIS SHEET. FENCE POST SHALL BE 4" DIAMETER, GALVANIZED STEEL, 11-GAUGE. U-BOLT SHALL BE 5/8" GALVANIZED STEEL. CONCRETE FOOTING SHALL BE USING PORTLAND CEMENT CONCRETE TYPE 500-C-2500. THE FENCE PANELS SHALL 2-INCH MESH CHAIN LINK FENCE, GALVANIZED STEEL, 9-GAUGE. THE REMOVAL SHALL INCLUDE POST, AND CONCRETE FOOTING, AS DIRECTED BY THE CITY ENGINEER.
5. THE CONTRACTOR SHALL PROTECT ALL NEWLY CONCRETE SURFACES AND IMPROVEMENTS, FROM DAMAGE. THE CONTRACTOR SHALL REMOVE AND REPLACE ALL CONCRETE AND IMPROVEMENTS DAMAGED PRIOR TO ACCEPTANCE.
6. THE CONTRACTOR SHALL REMOVE AND RECONSTRUCT FENCE POST AND FOOTING, PER PLAN AND THE SPECIFICATION. FENCE POST SHALL BE 8" DIAMETER, GALVANIZED STEEL, 22-GAUGE. CONCRETE FOOTING SHALL BE USING PORTLAND CEMENT CONCRETE TYPE 500-C-2500. THE REMOVAL SHALL INCLUDE POST, AND CONCRETE FOOTING, AS DIRECTED BY THE CITY ENGINEER.
7. THE CONTRACTOR SHALL CONSTRUCT FENCE POST WITH TENSION BAND, AND FOOTING, PER PLAN AND THE SPECIFICATION. FENCE POST SHALL BE 4" DIAMETER, GALVANIZED STEEL, 11-GAUGE. TENSION BAND SHALL BE 1-5/8" GALVANIZED STEEL. CONCRETE FOOTING SHALL BE USING PORTLAND CEMENT CONCRETE TYPE 500-C-2500.
8. THE CONTRACTOR SHALL CONSTRUCT FENCE POST WITH TENSION BAND, AND FOOTING, PER PLAN AND THE SPECIFICATION. FENCE POST SHALL BE 8" DIAMETER, GALVANIZED STEEL, 22-GAUGE. TENSION BAND SHALL BE 1-5/8" GALVANIZED STEEL. CONCRETE FOOTING SHALL BE USING PORTLAND CEMENT CONCRETE TYPE 500-C-2500.
9. THE CONTRACTOR SHALL CONSTRUCT FENCE POST, FOOTING, AND FENCE PANEL, PER PLAN AND THE SPECIFICATION, AND PER MAN GATE AND FENCE PANEL DETAIL SHOWN ON THIS SHEET. FENCE POST SHALL BE 2 1/2" DIAMETER, GALVANIZED STEEL, 11-GAUGE. CONCRETE FOOTING SHALL BE USING PORTLAND CEMENT CONCRETE TYPE 500-C-2500. THE FENCE PANELS SHALL 2-INCH MESH CHAIN LINK FENCE, GALVANIZED STEEL, 9-GAUGE.
10. THE CONTRACTOR SHALL CONSTRUCT TOP RAIL, PER PLAN AND THE SPECIFICATION. TOP RAIL SHALL BE 1 3/4" DIAMETER, GALVANIZED STEEL, 11-GAUGE.
11. THE CONTRACTOR SHALL CONSTRUCT TENSION BAR, PER PLAN AND THE SPECIFICATION. TENSION BAR SHALL BE GALVANIZED STEEL, 6-GAUGE.
12. CONTRACTOR SHALL REINSTALL GATE SYSTEM AND MODIFY GALVANIZED STEEL SLIDING CHAIN-LINK GATE TO OPEN OPPOSITE DIRECTION AS REQUIRED FOR IMPROVEMENTS, PER PLAN AND THE SPECIFICATIONS. ADJUST TRACK, ROLLERS, AND STOPS AS NEEDED. FIELD WELDING MAY BE REQUIRED; CLEAN AND COAT ALL CUTS AND WELDS WITH COLD GALVANIZING COMPOUND. RECONNECT AND TEST FOR FULL OPERATION. REPAIR OR REPLACE DAMAGED OR MISSING COMPONENTS AT NO ADDITIONAL COST TO CITY AND AS APPROVED BY CITY ENGINEER.
13. CONTRACTOR SHALL MOUNT ADA KICKPLATE, ON THE PUSH SIDE, FLUSH TO THE BOTTOM OF THE NEW GATE DOOR, PER PLAN AND THE SPECIFICATIONS. THE ADA KICK-PLATE SHALL BE SMOOTH SURFACE, A HEIGHT OF 10-INCHES FROM THE BOTTOM OF THE DOOR.

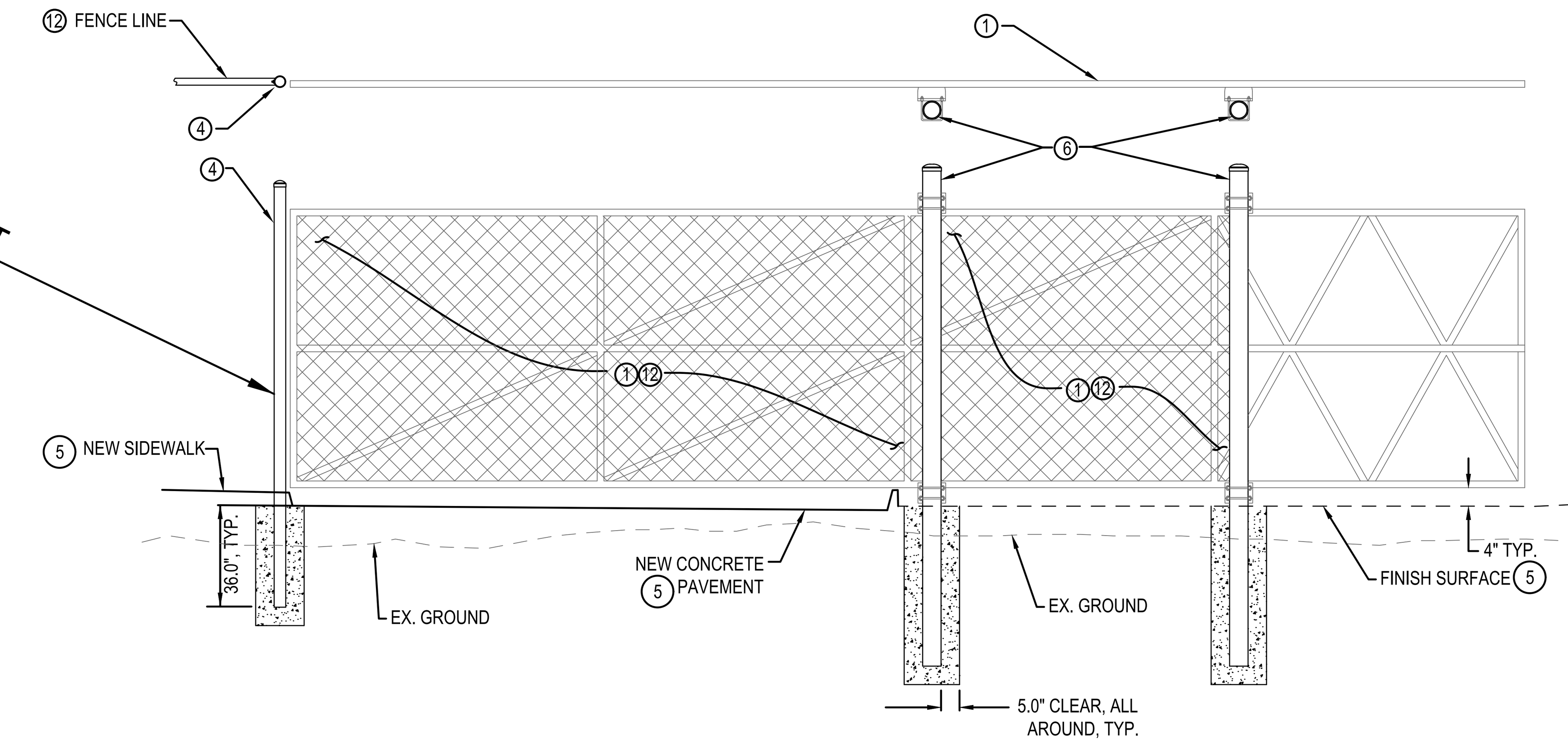

EXISTING CANTILEVER GATE REINSTALLATION DETAIL

NOT TO SCALE

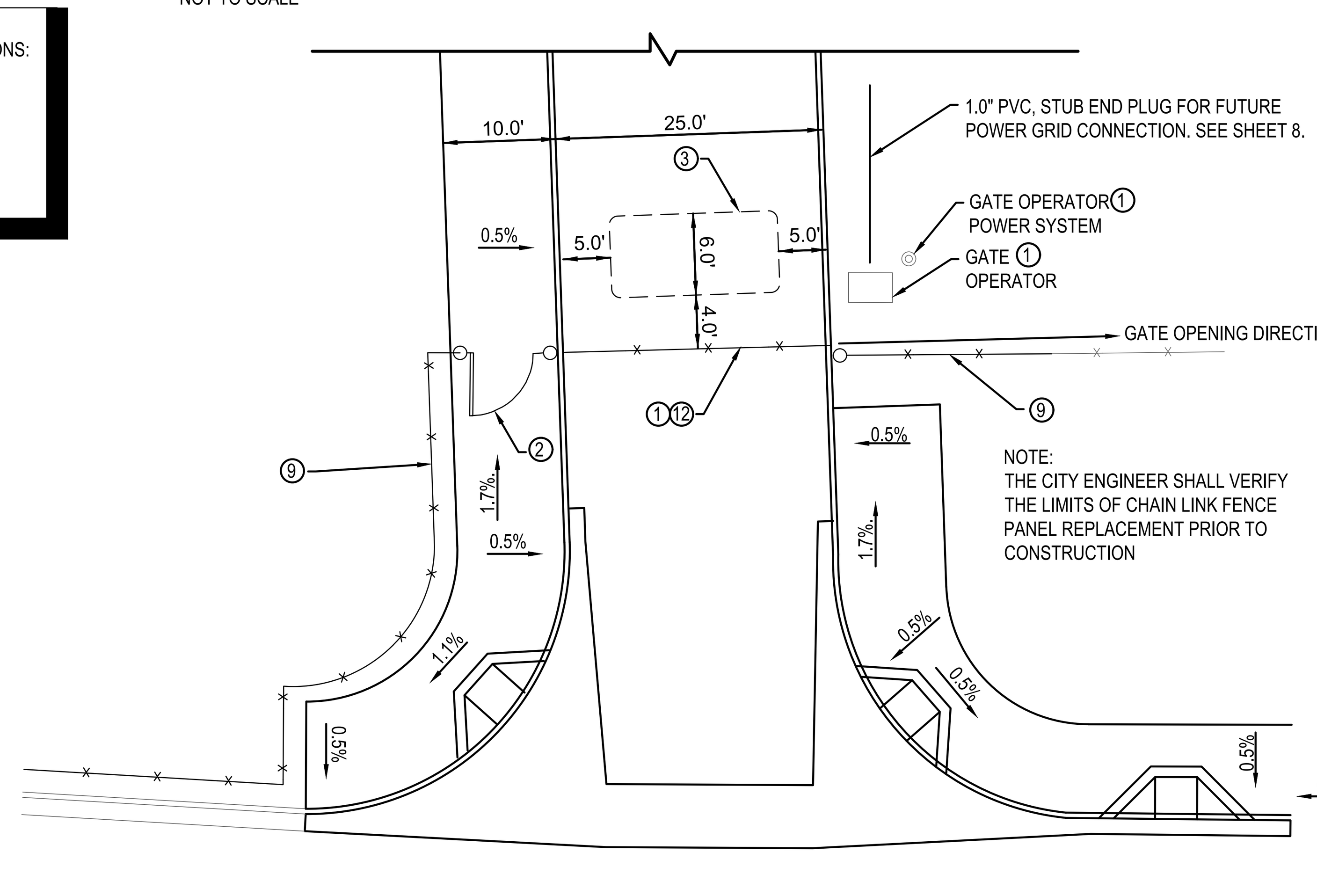

EXISTING CANTILEVER GATE RELOCATION DETAIL

NOT TO SCALE

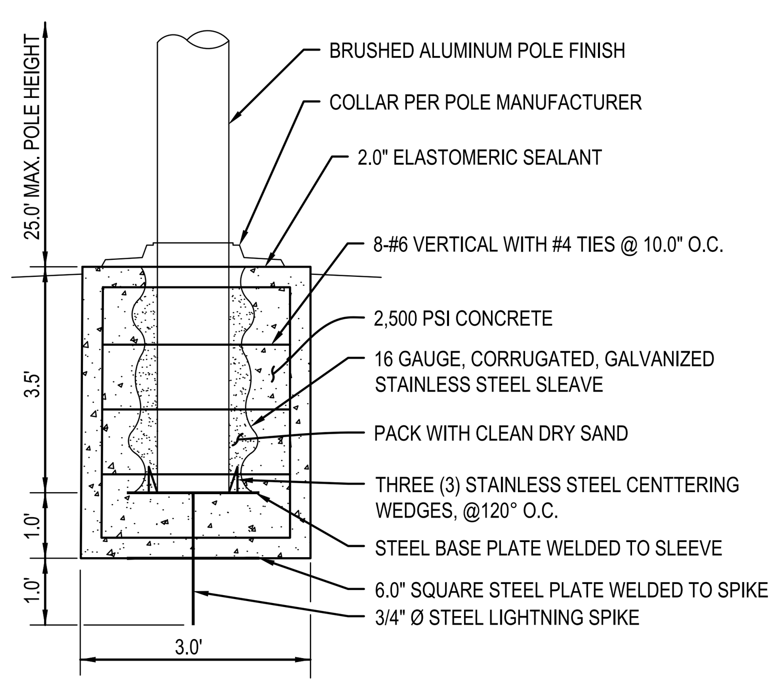

NOTE:
MAXIMUM FLAG SIZE: 5.0' X 8.0'

FLAGPOLE CONCRETE FOOTING DETAIL

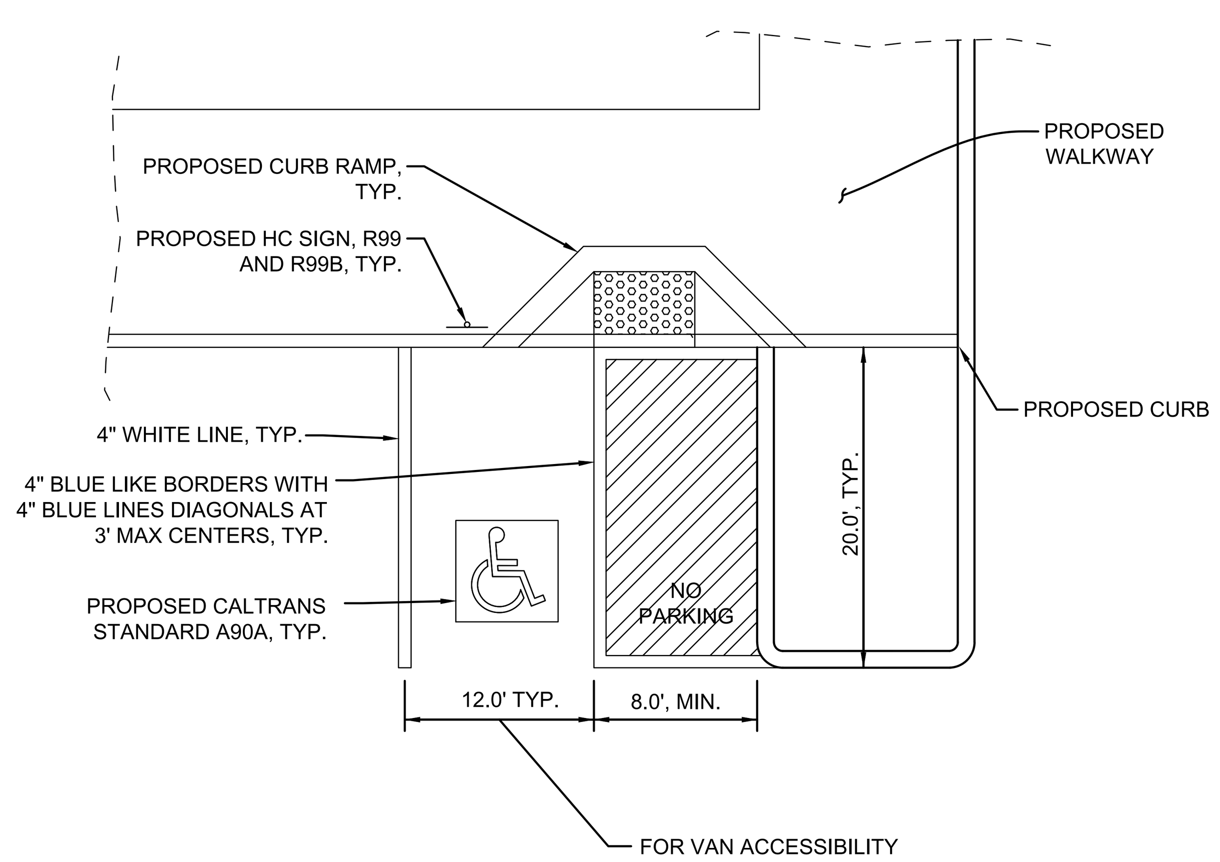

DISABLED PERSONS PARKING SYMBOL, LEGEND AND MARKINGS DETAIL

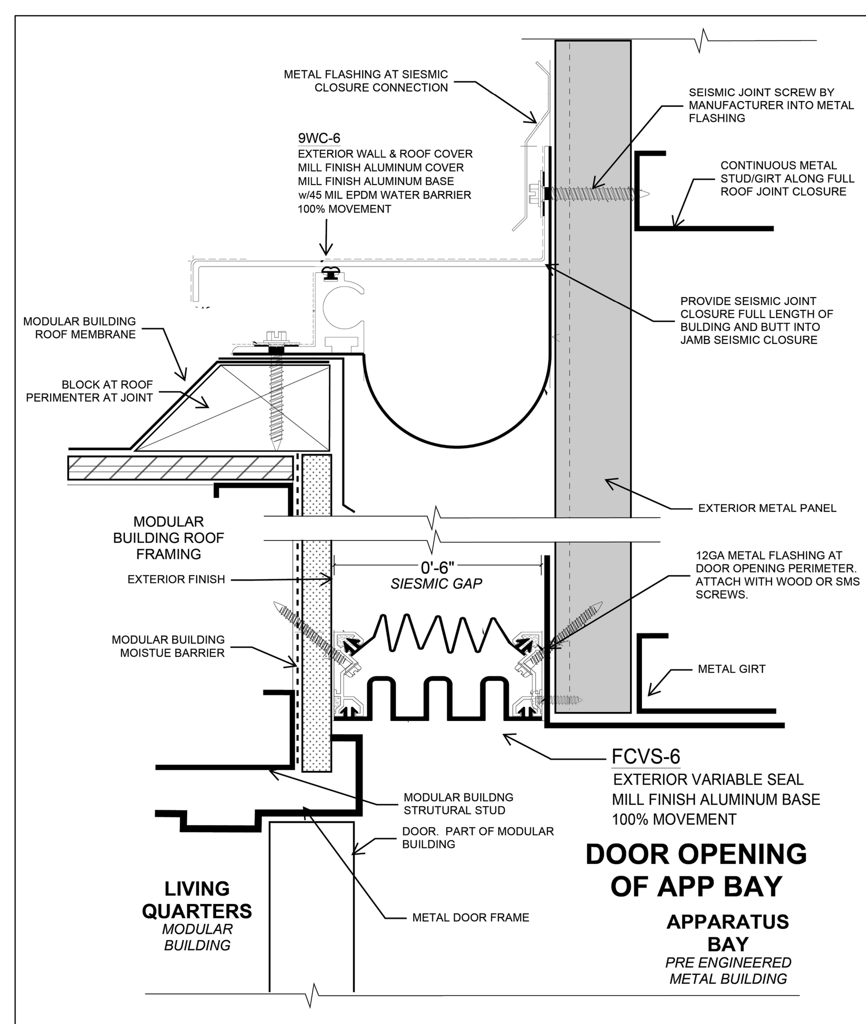

VENTURA INTERIM FIRE STATION
SEISMIC JOINT DETAIL - WALL

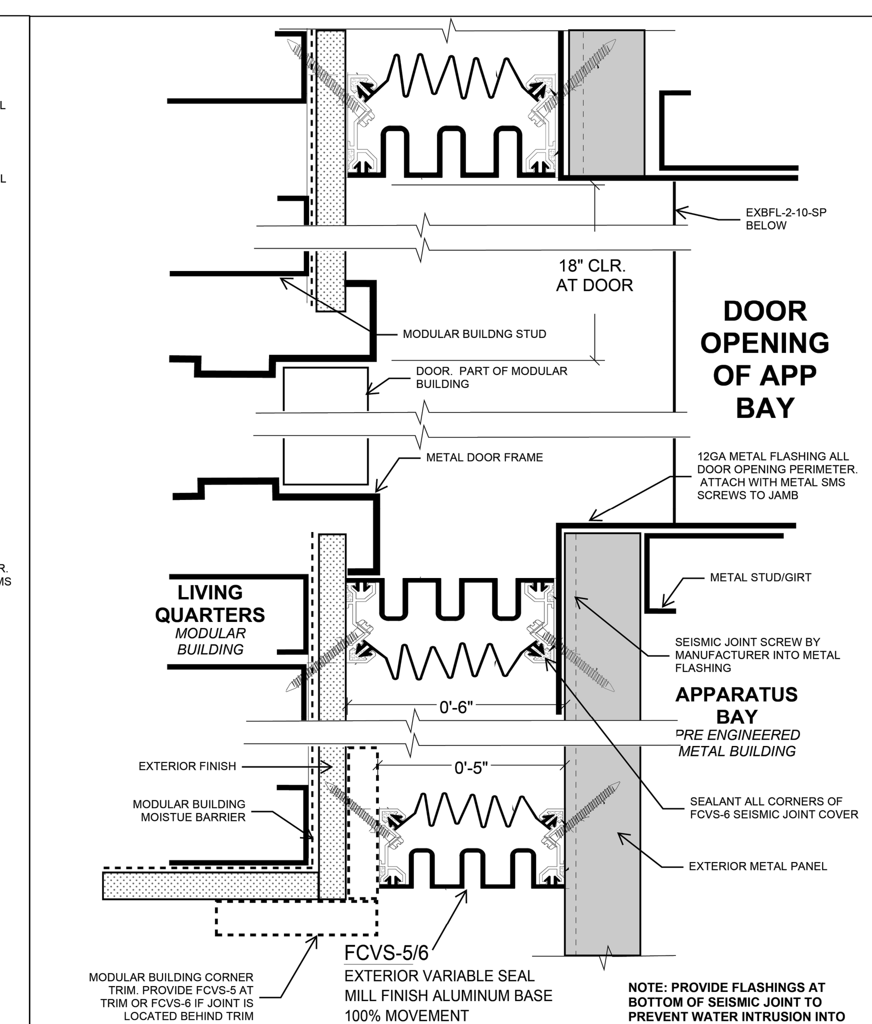

VENTURA INTERIM FIRE STATION
SEISMIC JOINT DETAIL - WALL

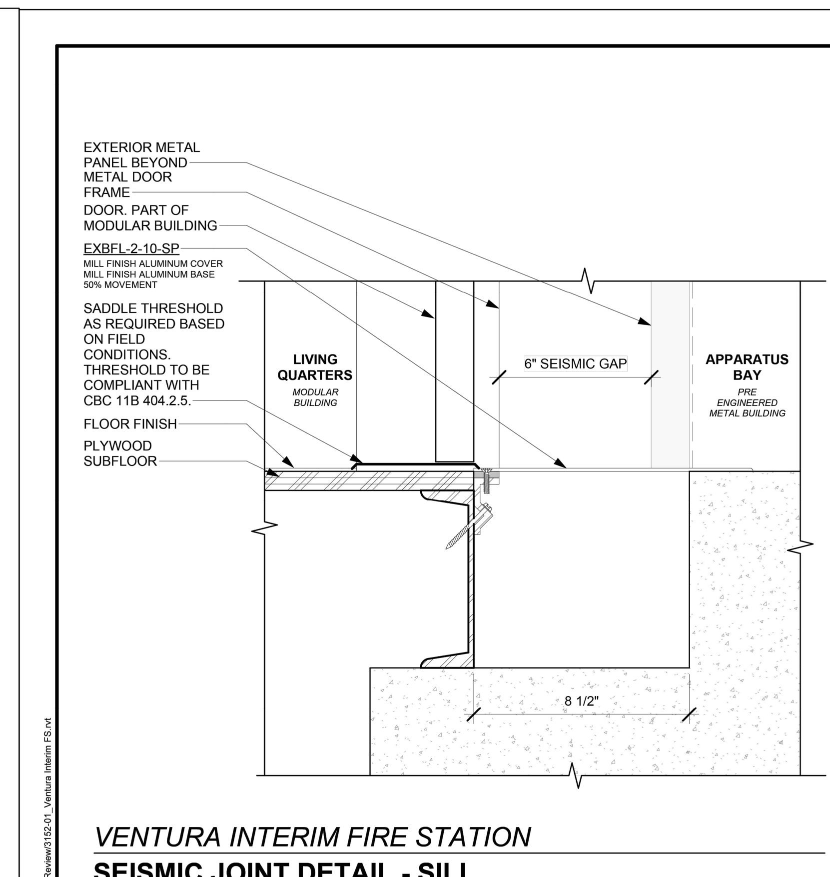

VENTURA INTERIM FIRE STATION
SEISMIC JOINT DETAIL - SILL

rrm design group

VENTURA INTERIM FIRE STATION
A-901: SESIMIC GAP DETAIL

REF. SHT	
DRAWN BY	DP
CHECKED BY	KH
DATE	03/16/26
JOB NO	3152-01-PS24
SCALE	3" = 1'-0"

REV.	DESCRIPTION	CK'D	APP	DATE

PUBLIC WORKS DEPARTMENT ENGINEERING DIVISION
CITY OF SAN BUENAVENTURA

INTERIM FIRE STATION NO. 7
FENCE GATE IMPROVEMENTS AND DETAILS

DRN. BY: DAG | DES. BY: GDK | CK'D. BY: GDK

PRINCIPAL ENGINEER — DATE: 5 May 2026

CITY ENGINEER — DATE: 5/7/2026

REGISTERED PROFESSIONAL ENGINEER — ORNELA HASA — NO. 92225 — CIVIL — STATE OF CALIFORNIA

SPEC. NUMBER 2025-010 | PROJECT NUMBER FA11-1061

April 28, 2026 | SHEET 18 OF 151 | DWG. NO. 2025-D-010

NOTES

1. TERMINATE CAT6E IN EXTERIOR RATED JUNCTION BOX MOUNTED BELOW ROOF LINE, COIL CABLE AND PROVIDE BLANK COVER.
2. PROVIDE 3 DUPLEX 120V RECEPTACLES EVENLY SPACED 8" TO 12" ABOVE CABINET COUNTERTOP. (GLOBAL MODULAR INC.)
3. UNDERGROUND CONDUIT AND SLAB PENETRATION TO BE COMPLETED WITH SITE CONSTRUCTION.
4. COIL AND ATTACH ADEQUATE CABLE TO COMPLETE ON-SITE PULL TO TERMINATE AT IT EQUIPMENT AND TELECOM CENTER IN MODULAR LIVING QUARTERS.
5. TERMINATE TELEVISION CAT6E TO WALL BOX AND PLATE WITH RJ 45 JACKS AT ± 48" ABOVE FLOOR.
6. PROVIDE TELEVISION QUAD 120V RECEPTACLES AT ± 48" ABOVE FLOOR. (GLOBAL MODULAR INC.)

THE PLAN SHOWS IT CABLE DROP AND BELOW GRADE CONDUIT FOR MODULAR UNITS AND APPARATUS BAY. WORK SHOWN FOR MODULAR BUILDING TO BE COMPLETED BY GLOBAL MODULAR. WORK SHOWN ON APPARATUS BAY TO BE COMPLETED BY THE SITE IMPROVEMENT CONTRACTOR INCLUDING TERMINATION OF CABLE TO THE CAPTAIN OFFICE.

SEE SITE UTILITY PLAN FOR WORK OUTSIDE THE BUILDING FOOTPRINT.

CABLE FOR IT, FIRE DISPATCH ALERTING AND FIRE ALARM WITHIN APPARATUS BAY SHALL BE INSTALLED IN GRC AND PROVIDE METAL JUNCTION BOXES FOR ALL TERMINATIONS, JUNCTION AND PULL POINTS. CONDUIT AND CABLE LAYOUT PLANS/SHOP DRAWING SHALL BE PREPARED BY THE CONTRACTOR AND SUBMITTED TO THE ENGINEER FOR APPROVAL PRIOR TO INSTALLATION.

EXTERIOR TERMINATION IN APPARATUS BAY SHALL BE INSTALLED IN ACCORDANCE WITH BUILDING SHELL PENETRATION DETAILS PROVIDED OR APPROVED BY CLEARSPAN.

USDD FIRE DISPATCH ALERTING EQUIPMENT TO BE INSTALLED EXCLUSIVELY BY INSTALLATION CONTRACTOR CERTIFIED BY THE MANUFACTURER, USDD HONEYWELL CABLE, CONDUIT AND JUNCTION BOX INSTALL TO BE COMPLETED BY GLOBAL MODULAR OR SITE IMPROVEMENT CONTRACTOR FOR APPARATUS BAY.

APPARATUS BAY CABLE RUNS FOR IT AND FIRE DISPATCH ALERTING TO BE EXTENDED TO CAPTAIN OFFICE WITHIN MODULAR BUILDING BY SITE IMPROVEMENT CONTRACTOR.

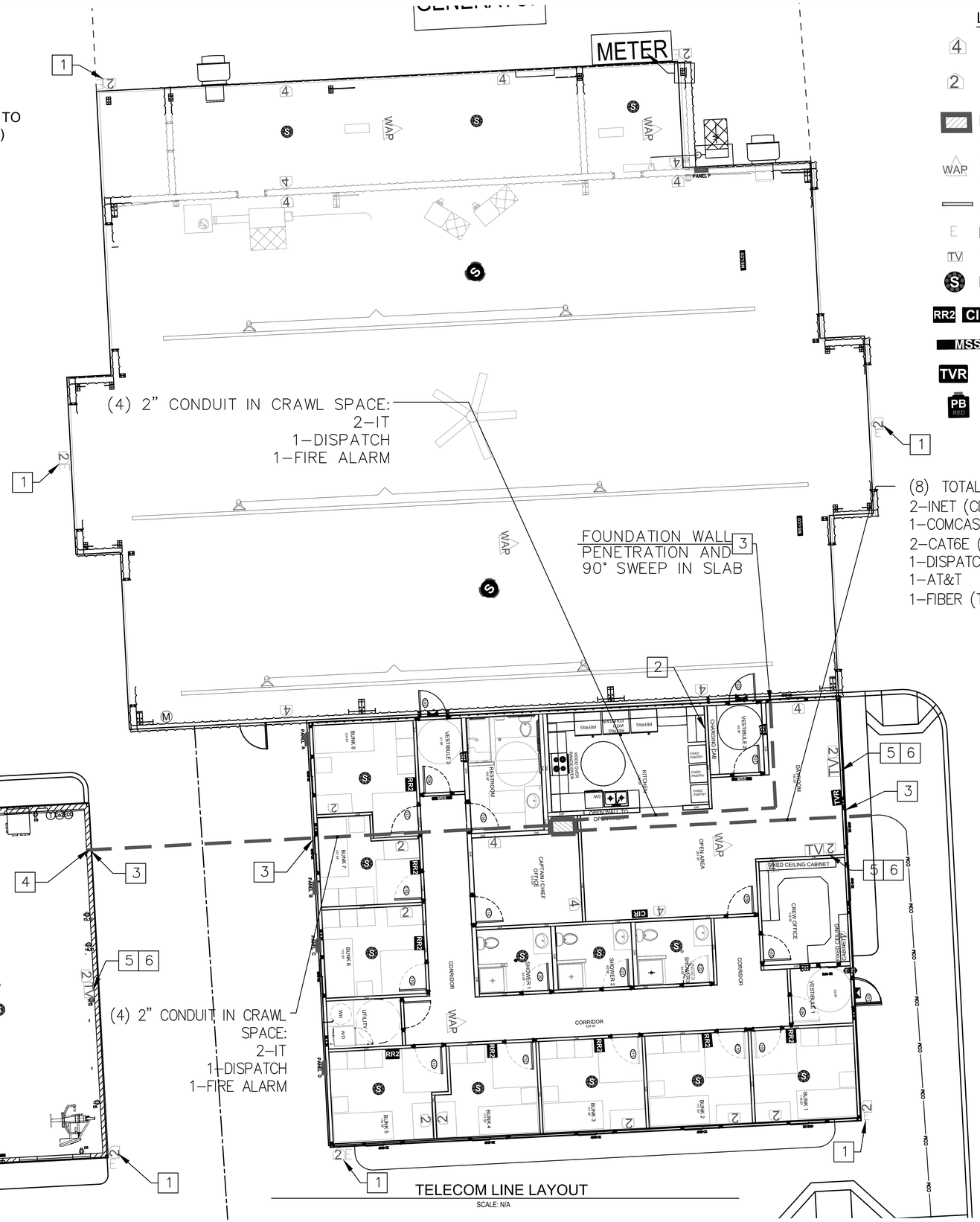

TELECOM LINE LAYOUT

SCALE: N/A

LEGEND

- 4 — CAT6E CABLE WALL BOX AND PLATE WITH RJ 45 JACK- (4) PORTS
- 2 — CAT6E CABLE WALL BOX AND PLATE WITH RJ 45 JACK - (2) PORTS
- IT EQUIPMENT AND TELECOM CENTER, USDD ATX & FIRE ALARM PANEL
- WAP — CAT6E CABLE AND RJ45 PLUG FOR CEILING MOUNTED WIRELESS ACCESS POINT
- ELECTRICAL PANEL
- E — EXTERIOR FOR FUTURE CAMERA
- TV — TELEVISION (WALL MOUNT)
- S — LED ALERTING SPEAKER (USDD DISPATCH ALERTING)
- RR2 CIR — ROOM REMOTE/COLOR REMOTE (USDD)
- MSS — MESSAGE SIGN BOARD (USDD)
- TVR — HDTV REMOTE (USDD)
- PB RED — BELL (USDD)

REV.	DESCRIPTION	CK'D	APP	DATE

PUBLIC WORKS DEPARTMENT ENGINEERING DIVISION

CITY OF SAN BUENAVENTURA

INTERIM FIRE STATION NO. 7

TELECOM PLAN

DRN. BY: DAG	DES. BY: RTH	CK'D. BY: RTH

PRINCIPAL ENGINEER — DATE: 5 May 2026

CITY ENGINEER — DATE: 5/7/2026

SPEC. NUMBER 2025-010 | PROJECT NUMBER FA11-1061

February 23, 2026 | SHEET 19 OF 151 | DWG. NO. 2025-D-010

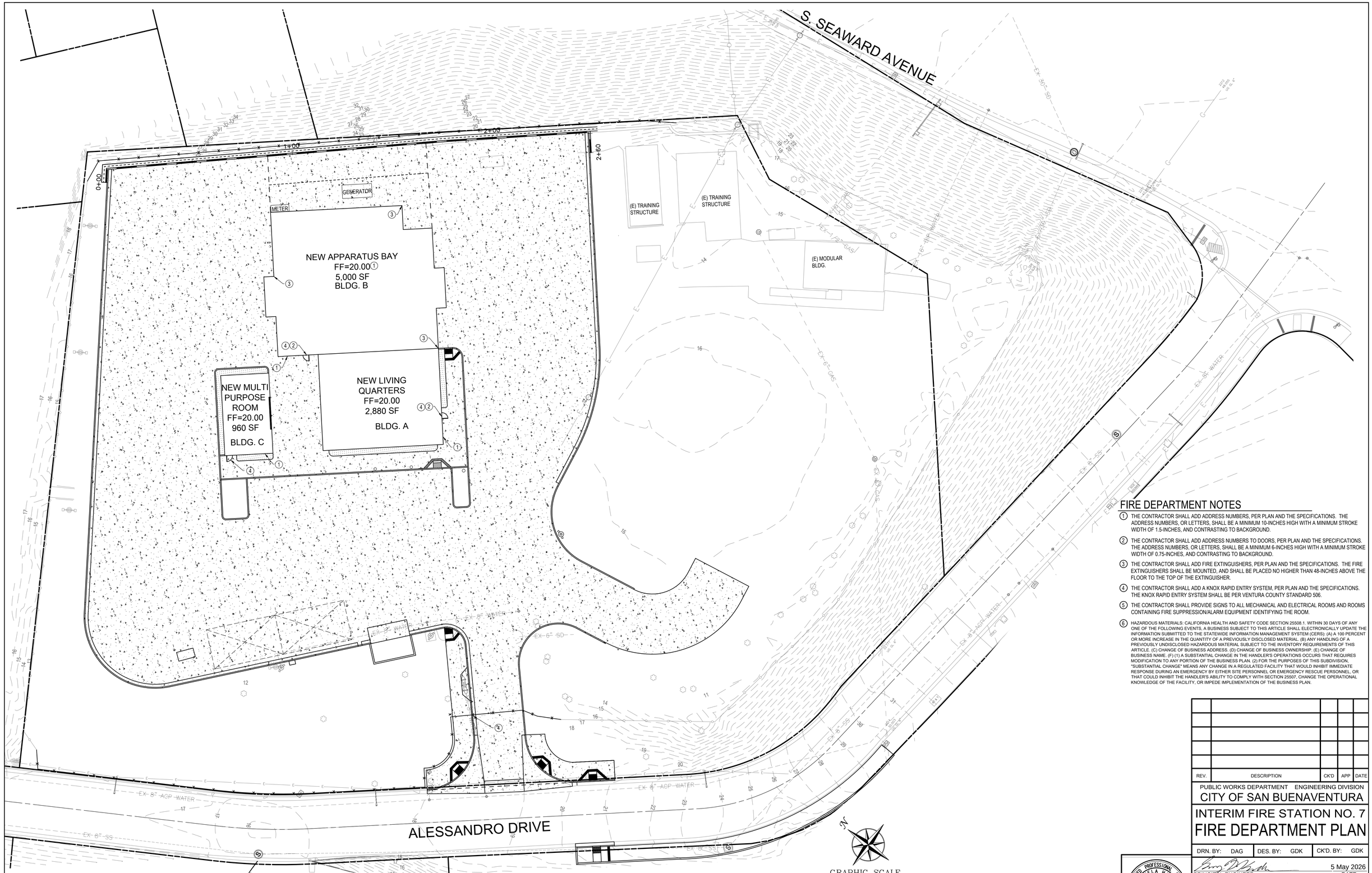

DEMOLITION PLAN VIEW

SCALE: 1"=20'

FIRE DEPARTMENT NOTES

1. THE CONTRACTOR SHALL ADD ADDRESS NUMBERS, PER PLAN AND THE SPECIFICATIONS. THE ADDRESS NUMBERS, OR LETTERS, SHALL BE A MINIMUM 10-INCHES HIGH WITH A MINIMUM STROKE WIDTH OF 1.5-INCHES, AND CONTRASTING TO BACKGROUND.
2. THE CONTRACTOR SHALL ADD ADDRESS NUMBERS TO DOORS, PER PLAN AND THE SPECIFICATIONS. THE ADDRESS NUMBERS, OR LETTERS, SHALL BE A MINIMUM 6-INCHES HIGH WITH A MINIMUM STROKE WIDTH OF 0.75-INCHES, AND CONTRASTING TO BACKGROUND.
3. THE CONTRACTOR SHALL ADD FIRE EXTINGUISHERS, PER PLAN AND THE SPECIFICATIONS. THE FIRE EXTINGUISHERS SHALL BE MOUNTED, AND SHALL BE PLACED NO HIGHER THAN 48-INCHES ABOVE THE FLOOR TO THE TOP OF THE EXTINGUISHER.
4. THE CONTRACTOR SHALL ADD A KNOX RAPID ENTRY SYSTEM, PER PLAN AND THE SPECIFICATIONS. THE KNOX RAPID ENTRY SYSTEM SHALL BE PER VENTURA COUNTY STANDARD 506.
5. THE CONTRACTOR SHALL PROVIDE SIGNS TO ALL MECHANICAL AND ELECTRICAL ROOMS AND ROOMS CONTAINING FIRE SUPPRESSION/ALARM EQUIPMENT IDENTIFYING THE ROOM.
6. HAZARDOUS MATERIALS: CALIFORNIA HEALTH AND SAFETY CODE SECTION 25508.1. WITHIN 30 DAYS OF ANY ONE OF THE FOLLOWING EVENTS, A BUSINESS SUBJECT TO THIS ARTICLE SHALL ELECTRONICALLY UPDATE THE INFORMATION SUBMITTED TO THE STATEWIDE INFORMATION MANAGEMENT SYSTEM (CERS): (A) A 100 PERCENT OR MORE INCREASE IN THE QUANTITY OF A PREVIOUSLY DISCLOSED MATERIAL. (B) ANY HANDLING OF A PREVIOUSLY UNDISCLOSED HAZARDOUS MATERIAL SUBJECT TO THE INVENTORY REQUIREMENTS OF THIS ARTICLE. (C) CHANGE OF BUSINESS ADDRESS. (D) CHANGE OF BUSINESS OWNERSHIP. (E) CHANGE OF BUSINESS NAME. (F) (1) A SUBSTANTIAL CHANGE IN THE HANDLER'S OPERATIONS OCCURS THAT REQUIRES MODIFICATION TO ANY PORTION OF THE BUSINESS PLAN. (2) FOR THE PURPOSES OF THIS SUBDIVISION, "SUBSTANTIAL CHANGE" MEANS ANY CHANGE IN A REGULATED FACILITY THAT WOULD INHIBIT IMMEDIATE RESPONSE DURING AN EMERGENCY BY EITHER SITE PERSONNEL OR EMERGENCY RESCUE PERSONNEL, OR THAT COULD INHIBIT THE HANDLER'S ABILITY TO COMPLY WITH SECTION 25507, CHANGE THE OPERATIONAL KNOWLEDGE OF THE FACILITY, OR IMPEDE IMPLEMENTATION OF THE BUSINESS PLAN.

REV.	DESCRIPTION	CK'D	APP	DATE

PUBLIC WORKS DEPARTMENT ENGINEERING DIVISION

CITY OF SAN BUENAVENTURA

INTERIM FIRE STATION NO. 7

FIRE DEPARTMENT PLAN

DRN. BY: DAG	DES. BY: GDK	CK'D. BY: GDK

PRINCIPAL ENGINEER — DATE: 5 May 2026

CITY ENGINEER — DATE: 5/7/2026

REGISTERED PROFESSIONAL ENGINEER — DANIELA HASA — NO. 92225 — CIVIL — STATE OF CALIFORNIA

SPEC. NUMBER 2025-010	PROJECT NUMBER FA11-1061
April 28, 2026	SHEET 20 OF 151	DWG. NO. 2025-D-010

SYMBOLS

X / SX.X	SECTION REFERENCE BUBBLE
X / SX.X	DETAIL REFERENCE BUBBLE WITH ARROW
X / SX.X	DETAIL REFERENCE BUBBLE
X / SX.X	FULL HEIGHT SECTION INDICATOR
X / SX.X X / SX.X	BUILDING SECTION INDICATOR
X / SX.X	ELEVATION OF WALL OR FRAME
N	NORTH ARROW
	SLOPE
	EARTH LAYER
	STEPPED SURFACE; FLOOR DEPRESSION
	SLOPED SURFACE
	INDICATES SAND OR GROUT
	INDICATES GRAVEL
—X—X—X—X—	WELDED WIRE FABRIC (WWF LAYER)
	STEEL TUBE COLUMN
	STEEL PIPE COLUMN
	WIDE FLANGE STEEL COLUMN
	MEMBER SPLICE
	STEEL IN CROSS SECTION
	DIRECTION OF SPAN

ABBREVIATIONS

SCHED	SCHEDULE
SECT	SECTION
SEP	SEPERATION
SHT	SHEET
SHTG	SHEATHING
SIM	SIMILAR
SLBB	SHORT LEGS BACK-TO-BACK
SOG	SLAB ON GRADE
SPCG	SPACING
SPECS	SPECIFICATIONS
SPCL	SPECIAL
SQ	SQUARE
SS	SELECT STRUCTURAL
SSL	SHORT SLOTTED HOLES
STAGG	STAGGER
STD	STANDARD
STIFF	STIFFENERS
STIRR	STIRRUP
STL	STEEL
STRUCT	STRUCTURAL
STRUCT I	STRUCTURAL I
SW	SHEAR WALL
SYM	SYMMETRICAL
TB	TIE BEAM
T&B	TOP AND BOTTOM
T&G	TONGUE & GROOVE
TOC	TOP OF CONCRETE
TOF	TOP OF FOOTING
TEMP	TEMPERATURE; TEMPORARY
THRU	THROUGH
THK	THICKNESS/THICK
THR	THREADED
TOP or T	TOP
TOS	TOP OF STEEL
TOW	TOP OF WALL
TSG	TAPERED STEEL GIRDER
TYP	TYPICAL
UBC	UNIFORM BUILDING CODE
UNO	UNLESS NOTED OTHERWISE
UT	ULTRA-SONIC TEST
VERT	VERTICAL
VSH	VERTICAL SLOTTED HOLES
W/	WITH
W/O	WITHOUT
WD	WOOD
WP	WORK POINT; WATERPROOF
WT	WEIGHT
WWF	WELDED WIRE FABRIC

STRUCTURAL STEEL SHAPES

Wx	W SHAPE
Cx	AMERICAN STD CHANNEL SHAPE
MC	MISC CHANNEL SHAPE
Lx	ANGLE SHAPE
WT, ST, MT	STRUCT TEE SHAPE
PIPE	STANDARD PIPE SHAPE
PIPE-X	EXTRA STRONG PIPE SHAPE
PIPE-XX	DBL EXTRA STRONG PIPE SHAPE
HSS	STRUCT TUBING SHAPE

GA	GAUGE
GALV	GALVANIZED
GB	GRADE BEAM
GLB	GLUED LAMINATED BEAM
GR	GRADE
GRND	GROUND
H or HORIZ	HORIZONTAL
HDR	HEADER
HGR	HANGER
HOSP	HOSPITAL
HP	HIGH POINT
HS	HIGH STRENGTH
HSH	HORIZONTALLY SLOTTED HOLES
HT	HEIGHT
HR	HARD ROCK
ID	INSIDE DIAMETER
IF	INSIDE FACE
I-JST	I-JOIST
IN	INCH
INCL	INCLUDE
INFO	INFORMATION
INSP	INSPECTION
INT	INTERIOR
JST	JOIST
JT	JOINT
K	KIPS
KSI	KIPS PER SQUARE INCH
LAB	LABORATORY
LB(S) OR #	POUND(S)
LF	LINEAL FOOT
LIN	LINEAL; LINEAR
LLBB	LONG LEGS BACK-TO-BACK
LLH	LONG LEG HORIZONTAL
LLV	LONG LEG VERTICAL
LP	LOW POINT
LSL	LONG SLOTTED HOLES
LT WT	LIGHTWEIGHT
LVL	LEVEL
MAS	MASONRY
MATL	MATERIAL
MAX	MAXIMUM
MB	MACHINE BOLT
MC	MISCELLANEOUS CHANNEL SHAPE
MECH	MECHANICAL
MFR	MANUFACTURER
MIN	MINIMUM; MINUTE
MISC	MISCELLANEOUS
(N)	NEW
N	NORTH
NF	NEAR FACE
NIC	NOT IN CONTRACT
NORM	NORMAL
NO or #	NUMBER
NS	NEAR SIDE
NTS	NOT TO SCALE
OC	ON CENTER
OD	OUTSIDE DIAMETER
OF	OUTSIDE FACE
OH	OPPOSITE HAND
OPNG	OPENING
OPP	OPPOSITE
ORIG	ORIGINAL
OSB	ORIENTED STRAND BOARD
PARA OR //	PARALLEL
PC	PRECAST; PIECE
PERP	PERPINDICULAR
PI	PLYWOOD INDEX
PL	PLATE
℄	PROPERTY LINE
PLF	POUNDS PER LINEAL FOOT
PLCS	PLACES-
PLY	PLYWOOD
PROP	PROPERTY
PT	POST TENSIONED
PW	PLATE WASHER
PJP	PARTIAL JOINT PENETRATION WELD
PREFAB	PREFABRICATED
PSF	POUNDS PER SQUARE FOOT
PSI	POUNDS PER SQUARE INCH
PVC	POLYVINYL CHLORIDE
PVMT	PAVEMENT
#	POUND; NUMBER
REF	REFERENCE
REINF	REINFORCE; REINFORCING
REQD	REQUIRED
RF	ROOF
Ø	DIAMETER

AB	ANCHOR BOLT
ACI	AMERICAN CONCRETE INSTITUTE
ADDL	ADDITIONAL
ADJ	ADJACENT
AESS	ARCHITECTURAL EXPOSED STRUCTURAL STEEL
AGGR	AGGREGATE
AISC	AMERICAN INSTITUTE OF STEEL CONSTRUCTION
ALT	ALTERNATE
ALUM	ALUMINUM
ANCH	ANCHOR
ANSI	AMERICAN NATIONAL STANDARDS INSTITUTE
APA	AMERICAN PLYWOOD ASSOCIATION
APPVD	APPROVED
APPROX	APPROXIMATE
ARCH	ARCHITECTURAL; ARCHITECT
ASTM	AMERICAN SOCIETY FOR TESTING AND MATERIALS
AWPA	AMERICAN WOOD PRESERVERS ASSOCIATION
AWS	AMERICAN WELDING SOCIETY
AITC	AMERICAN INSTITUTE OF TIMBER CONSTRUCTION
ASTM	AMERICAN SOCIETY FOR TESTING MATERIALS
&	AND
@	AT
BLDG	BUILDING
BLK	BLOCK
BLKG	BLOCKING
BM	BEAM
BN	BOUNDARY NAIL
BNDRY	BOUNDARY
BOT OR B	BOTTOM
BRC	BRACE
BRG	BEARING
BT	BENT
BTWN	BETWEEN
CANT	CANTILEVER
CAM OR C	CAMBER
CC	CENTER TO CENTER
CG	CENTER OF GRAVITY
CIP	CAST-IN-PLACE
CJ	CONSTRUCTION JOINT; CONTROL JOINT
CL	CENTER LINE
CLR	CLEARANCE; CLEAR
CMU	CONCRETE MASONRY UNIT
COL	COLUMN
COMP	COMPRESSION
CONC	CONCRETE
CONN	CONNECTION; CONNECT
CONSTR	CONSTRUCTION
CONT	CONTINUE; CONTINUOUS
CONTR	CONTRACTOR
CJP	COMPLETE JOINT PENETRATION WELD
CTR	CENTER
CTSK	COUNTERSINK; COUNTERSUNK
CU FT	CUBIC FOOT
d	PENNY (NAIL OR BAR DIA)
DBL	DOUBLE
DEPT	DEPARTMENT
DET	DETAIL
DF	DOUGLAS FIR/LARCH
DIA OR ø	DIAMETER
DIAG	DIAGONAL
DIAPH	DIAPHRAGM
DIM	DIMENSION
DN	DOWN
DO	DITTO (REPEAT)
DWG	DRAWING
DWL	DOWEL
EA	EACH
EF	EACH FACE
EJ	EXPANSION JOINT
EL	ELEVATION
ELEC	ELECTRICAL
ELEV	ELEVATOR
EMBED	EMBEDMENT
EN	EDGE NAIL
ENGR	ENGINEER
EQ	EQUAL OR EQUIVALENT
EQUIP	EQUIPMENT
ES	EACH SIDE
ETC	ET CETERA
EW	EACH WAY
EXIST or (E)	EXISTING
EXT	EXTERIOR
FDN	FOUNDATION
FF	FAR FACE
FF	FINISHED FLOOR
FIN	FINISH
FJ	FLOOR JOIST
FL	FLOOR LINE
FLG	FLANGE
FLR	FLOOR
FN	FIELD NAIL
FOC	FACE OF CONCRETE
FOM	FACE OF MASONARY
FOS	FACE OF STUD
FOW	FACE OF WALL
FP	FULL PENETRATION; FIRE PROOFING
FRMG	FRAMING
FS	FULL SIZE; FAR SIDE
FT	FOOT; FEET
FTG	FOOTING

SHEET INDEX

SHEET NUMBER	SHEET NAME
S0.0	SHEET LIST, ABBREVIATIONS AND SYMBOLS
S0.1	STRUCTURAL GENERAL NOTES
S0.2	STRUCTURAL GENERAL NOTES
S1.0	FOUNDATION PLAN
S1.1	REINFORCING PLAN
S1.2	MODULAR GYM FOUNDATION
S2.0	ELEVATIONS
S2.1	MODULAR ELEVATIONS
S3.0	TYPICAL CONCRETE DETAILS
S3.1	TYPICAL CONCRETE DETAILS
S3.2	PEMB ANCHORAGE DETAILS
S3.3	MODULAR DETAILS
S3.4	MODULAR DETAILS

REV.	DESCRIPTION	CK'D	APP	DATE
2	PLAN CHECK 2			2/17/26
1	PLAN CHECK 1			8/11/25

kpff
700 S. Flower St., Suite 2100
Los Angeles, CA 90017
O: 213.418.0201
www.kpff.com

REGISTERED PROFESSIONAL ENGINEER DAVID A. TORO No. S6043 STRUCTURAL STATE OF CALIFORNIA

PUBLIC WORKS DEPARTMENT ENGINEERING DIVISION

CITY OF SAN BUENAVENTURA

INTERIM FIRE STATION NO. 7

SHEET LIST, ABBREVIATIONS AND SYMBOLS

DRN. BY: CC DES. BY: KK CK'D. BY: RT

PRINCIPAL ENGINEER 5 May 2026 DATE

CITY ENGINEER 5/7/2026 DATE

SPEC. NUMBER 2025-010 PROJECT NO. FA11-1061

SEPTEMBER 7, 2025 SHEET 21 OF 151 DWG. NO. 2025-D-010

2/17/2026 3:17:50 PM
C:\pwworking\ecd\d0326\n0406587 - City of Ventura Fire Station No. 7 - Apparatus Bay Foundations\$Sheet\n0406587_Civil-Fire Station 7.R24.rvt

CONCRETE

1. ALL CONCRETE CONSTRUCTION SHALL CONFORM WITH CHAPTER 19 OF THE CODE AND WITH THE PROVISIONS OF ACI 318, LATEST EDITION.
2. REINFORCED CONCRETE IS DESIGNED BY THE "ULTIMATE STRENGTH DESIGN METHOD".
3. CONCRETE MIXTURES SHALL BE DESIGNED BY THE APPROVED TESTING LABORATORY AND REVIEWED BY THE STRUCTURAL ENGINEER. THE COMPRESSIVE STRENGTH OF THE CONCRETE SHALL BE PROPORTIONED BASED AS INDICATED ON ACI 318-19.
4. SCHEDULE OF STRUCTURAL CONCRETE 28-DAY STRENGTH AND TYPES

LOCATIONS IN STRUCTURE	STRENGTH (PSI)	DENSITY (PCF)	MAX W/C RATIO
FOOTINGS AND FOUNDATION WALLS	4,000	145	0.45

5. PROVIDE CONCRETE MIXTURES THAT MEET THE DURABILITY REQUIREMENTS INDICATED IN THE GEOTECHNICAL REPORT AND PROJECT SPECIFICATIONS.
6. CONCRETE SHRINKAGE SHALL BE LIMITED TO 0.05 PERCENT PER ASTM C157.
7. CONCRETE SHALL BE MAINTAINED ABOVE 50 DEGREES FAHRENHEIT AND IN MOIST CONDITION FOR A MINIMUM OF 7 DAYS AFTER PLACEMENT.
8. PORTLAND CEMENT SHALL CONFORM TO ASTM C-150, TYPE II, OR AS REQUIRED BY THE GEOTECHNICAL REPORT AND PROJECT SPECIFICATIONS. PROVIDE TYPE V WHERE CONCRETE IS IN CONTACT WITH CORROSIVE SOIL.
9. AGGREGATE FOR HARDROCK CONCRETE SHALL CONFORM TO ALL REQUIREMENTS AND TESTS OF ASTM C-33 AND PROJECT SPECIFICATIONS.
10. CONCRETE MIXING OPERATIONS, ETC. SHALL CONFORM TO ASTM C-94..
11. PLACEMENT OF CONCRETE SHALL CONFORM TO THE CODE CHAPTER 19 AND PROJECT SPECIFICATIONS. CLEAN AND ROUGHEN TO 1/4" AMPLITUDE ALL CONCRETE SURFACES AGAINST WHICH NEW CONCRETE IS TO BE PLACED UNLESS NOTED OTHERWISE.
12. ALL REINFORCING BARS, ANCHOR BOLTS AND OTHER CONCRETE INSERTS, INCLUDING PIPES AND CONDUITS, SHALL BE SECURED IN POSITION PRIOR TO PLACING CONCRETE.
13. CORING IN CONCRETE IS NOT PERMITTED WITHOUT ENGINEER'S REVIEW AND APPROVAL. NOTIFY THE STRUCTURAL ENGINEER IN ADVANCE OF CONDITIONS NOT SHOWN ON THE DRAWINGS.
14. CONDUITS LARGER THAN 1-1/2" DIAMETER MAY BE EMBEDDED IN STRUCTURAL CONCRETE WHERE SPECIFICALLY APPROVED BY STRUCTURAL ENGINEER. UNLESS DETAILED OTHERWISE, EMBEDDED CONDUIT SHALL CONFORM TO THE FOLLOWING:
    A. CONDUITS SHALL NOT DISPLACE OR INTERRUPT REINFORCING BARS.
    B. DO NOT STACK AND/OR CLUSTER CONDUITS.
    C. SPACE EMBEDDED CONDUITS A MINIMUM OF 3 DIAMETERS CLEAR FROM OTHER EMBEDDED CONDUITS USING THE LARGER CONDUIT DIAMETER.
    D. PROVIDE 1-1/2" CLEAR FROM REINFORCING BARS.
    E. EMBEDDED CONDUITS SHALL BE PLACE IN THE MIDDLE THIRD OF SLABS, BEAMS, WALLS, FOOTINGS, ETC.
15. PIPES ARE NOT PERMITTED TO BE EMBEDDED IN CONCRETE.
16. SCREED CONCRETE FILL OVER STEEL DECK TO A CONSTANT THICKNESS AS SPECIFIED IN THE DECKING SCHEDULE.

CONSTRUCTION JOINTS

1. ALL CONSTRUCTION JOINTS SHALL BE CONSTRUCTED IN ACCORDANCE WITH CHAPTER 19 AND ACI 318 26.5.6 OF THE CODE AND THE TYPICAL CONSTRUCTION JOINT DETAILS SHOWN ON THE STRUCTURAL DRAWINGS.
2. ALL SURFACES OF CONSTRUCTION JOINTS SHALL BE CLEANED TO REMOVE DUST, CHIPS, STANDING WATER OR OTHER FOREIGN MATTER PRIOR TO PLACING CONCRETE.
3. THE CONTRACTOR SHALL SUBMIT THE PROPOSED LOCATIONS OF CONSTRUCTION JOINTS TO THE STRUCTURAL ENGINEER FOR REVIEW BEFORE STARTING CONSTRUCTION.

REINFORCING STEEL

1. REINFORCING BARS SHALL CONFORM TO THE REQUIREMENTS OF CHAPTER 19 OF THE CODE, ASTM 706, GRADE 60 (UNO). DEFORMATIONS SHALL BE IN ACCORDANCE WITH ASTM A-305.
2. BARS SHALL BE CLEAN OF RUST GREASE OR OTHER MATERIALS LIKELY TO IMPAIR BOND. ALL REINFORCING BAR BENDS SHALL BE MADE COLD.
3. DETAIL, FABRICATE, AND INSTALL REINFORCING IN ACCORDANCE WITH THE REQUIREMENTS OF ACI 301, ACI 117, AND THE "CRSI MANUAL OF STANDARD PRACTICE."
4. REINFORCING BAR SPLICES SHALL BE MADE AS INDICATED ON THE DRAWINGS. MINIMUM SPLICE LENGTH FOR REINFORCING STEEL BARS IN CONCRETE SHALL BE AS REQUIRED FOR CLASS B SPLICE PER ACI 318 SECTION 25.5.2 UNO. LAP ALL HORIZONTAL BARS AT CORNERS AND INTERSECTIONS.
5. ALL BARS SHALL BE MARKED SO THEIR IDENTIFICATION CAN BE MADE WHEN THE FINAL IN-PLACE INSPECTION IS MADE.
6. WHERE WELDING OF REINFORCING IS APPROVED BY THE STRUCTURAL ENGINEER. IT SHALL BE DONE BY AWS CERTIFIED WELDERS USING E90XX OR APPROVED ELECTRODES. WELDING PROCEDURES SHALL CONFORM TO THE REQUIREMENTS OF STRUCTURAL WELDING CODE REINFORCING STEEL AWS-D1.4 LATEST REVISION. REINFORCING BARS TO BE WELDED SHALL CONFORM TO THE REQUIREMENTS OF ASTM A-706.
7. BARS IN SLABS SHALL BE SECURELY SUPPORTED ON WELL-CURED CONCRETE BLOCKS OR APPROVED METAL CHAIRS, PRIOR TO PLACING CONCRETE.
8. COMPLETE AND DETAILED REINFORCING PLACEMENT DRAWINGS SHALL BE PREPARED AND SUBMITTED TO THE ARCHITECT FOR REVIEW BY THE STRUCTURAL ENGINEER PRIOR TO FABRICATION IN ACCORDANCE WITH THE SPECIFICATIONS AND APPLICABLE CODES. THESE DRAWINGS SHALL BE AVAILABLE ON THE JOB SITE PRIOR TO PLACING OF CONCRETE.
9. MILL TEST REPORTS FOR GRADE 60 BARS SHALL BE SUBMITTED PRIOR TO PLACEMENT OF CONCRETE.
10. CONTINUOUS INSPECTION OF CONCRETE SHALL INCLUDE INSPECTION DURING INSTALLATION OF REINFORCING STEEL. INSPECTION SHALL BE SCHEDULED SO THAT PLACEMENT OF REINFORCING STEEL, CONDUIT SLEEVES AND EMBEDDED ITEMS MAY BE CORRECTED PRIOR TO PLACEMENT OF OVERLYING GRIDS OF REINFORCING STEEL.
11. CONCRETE PROTECTION FOR REINFORCEMENT:

CAST-IN-PLACE CONCRETE: THE FOLLOWING MINIMUM CONCRETE COVER SHALL BE PROVIDED FOR REINFORCEMENT:

	MINIMUM COVER
CONCRETE CAST AGAINST AND PERMANENTLY EXPOSED TO EARTH	3"
CONCRETE EXPOSED TO EARTH OR WEATHER	
#6 & LARGER	2"
#5 & SMALLER	1 1/2"
SLABS, WALLS, OR JOISTS NOT EXPOSED TO WEATHER OR IN CONTACT WITH THE GROUND	
#14 & LARGER	1 1/2"
#11 & SMALLER	3/4"
BEAM AND COLUMN TIES & STIRRUPS NOT EXPOSED TO WEATHER OR IN CONTACT WITH GROUND	1 1/2"

FOUNDATION

1. FOUNDATION DESIGN BASED ON THE GEOTECHNICAL INVESTIGATION REPORT 306642-001 BY EARTH SYSTEMS PACIFIC DATED DECEMBER 16, 2024.
2. CONVENTIONAL FOUNDATIONS AND SLABS-ON-GRADE SHALL BEAR ON COMPACTED FILL. ALL UNSUITABLE SOILS SHALL BE REMOVED AND RECOMPACTED UNDER THE SUPERVISION OF THE GEOTECHNICAL ENGINEER OR HIS/HER REPRESENTATIVE. REFER TO THE GEOTECHNICAL REPORT AND PROJECT SPECIFICATIONS FOR EXTENT OF REMOVAL AND COMPACTION REQUIREMENTS.
3. FOOTINGS ARE DESIGNED BASED ON THE FOLLOWING INFORMATION FROM THE GEOTECHNICAL REPORT:

    MAT FOUNDATION

    ALLOWABLE NET BEARING PRESSURE UNDER DEAD AND SUSTAINED LIVE LOADS = 550 PSF
    ALLOWABLE NET BEARING PRESSURE UNDER CONCENTRATED LOAD AREAS = 2,000 PSF

    SUBGRADE MODULUS, k_s = 21.8 PSI/IN

    MAT FOUNDATION SHALL BE UNDERLAIN AS RECOMMENDED BY THE GEOTECHNICAL ENGINEER. BEARING CAPACITY IS BASED ON 12-INCH MINIMUM FOOTING DEPTH BELOW ADJACENT GRADE.

    CONTINUOUS FOOTINGS

    ALLOWABLE BEARING PRESSURE = 2,000 PSF

    BEARING CAPACITY IS BASED ON 15-INCH MINIMUM FOOTING WIDTH AND 12-INCH MINIMUM FOOTING DEPTH BELOW ADJACENT GRADE.

    INCREASE FOR SHORT TERM LOADS

    ALLOWABLE BEARING PRESSURES MAY BE INCREASED BY 1/3 WH WHEN APPLIED DEAD AND LIVE LOADS ARE COMBINED WITH WIND AND SEISMIC FORCES.

    LATERAL RESISTANCE

    ALLOWABLE PASSIVE EARTH PRESSURE = 395 PCF
    COEFFICIENT OF FRICTION = 0.60
    SLIDING FACTOR OF SAFETY = 1.5

    PASSIVE AND FRICTION RESISTANCE MAY BE COMBINED TO RESIST LATERAL LOADS INCLUDING WIND AND SEISMIC WITHOUT REDUCTION.
4. RETAINING WALLS ARE DESIGNED BASED ON THE FOLLOWING INFORMATION:

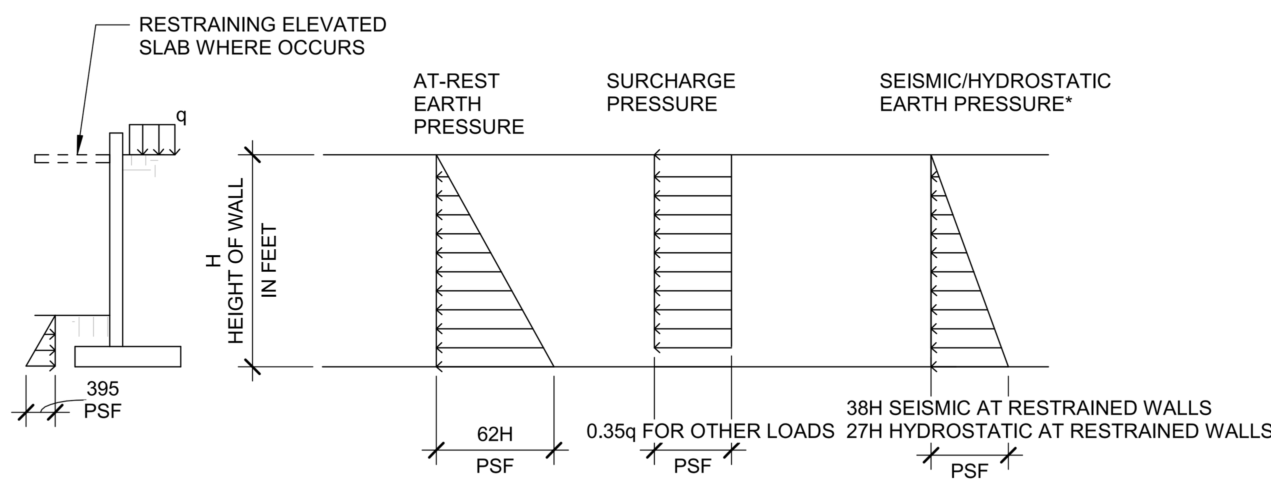

5. REFER TO GEOTECHNICAL REPORT FOR GROUNDWATER ELEVATION. CONTRACTOR TO PROVIDE DE-WATERING OF EXCAVATIONS FROM EITHER SURFACE WATER, GROUND WATER AND/OR SEEPAGE, IF REQUIRED.
6. EXCAVATION FOR FOOTINGS SHALL BE APPROVED BY THE GEOTECHNICAL ENGINEER PRIOR TO PLACING CONCRETE AND REINFORCING. CONTRACTOR TO NOTIFY THE SOILS ENGINEER WHEN INSPECTION OF EXCAVATION IS READY. SOILS ENGINEER TO SUBMIT LETTER OF COMPLIANCE.
7. ALL EXCAVATIONS SHALL BE PROPERLY BACKFILLED. DO NOT PLACE BACKFILL BEHIND RETAINING WALLS BEFORE CONCRETE OR GROUT HAS ATTAINED FULL DESIGN STRENGTH. BRACE OR PROTECT ALL BUILDING AND PIT WALLS BELOW GRADE FROM LATERAL LOADS UNTIL ATTACHING FLOORS ARE IN PLACE AND HAVE ATTAINED FULL STRENGTH. CONTRACTOR SHALL PROVIDE FOR DESIGN, PERMITS AND INSTALLATION OF SUCH BRACING.
8. FOOTING BACKFILL AND UTILITY BACKFILL WITHIN BUILDING AREA SHALL BE MECHANICALLY COMPACTED IN LAYERS IN ACCORDANCE WITH THE SOILS REPORT AND APPROVED BY THE SOILS ENGINEER. FLOODING WILL NOT BE PERMITTED. ALL FILLS USED TO SUPPORT FOUNDATIONS SHALL BE INSPECTED BY THE SOILS ENGINEER REPRESENTATIVE
9. REMOVE ALL ABANDONED FOOTINGS, UTILITIES, ETC.
10. PLACE A MOISTURE BARRIER MEMBRANE OVER SAND AND GRAVEL BASE UNDER SLABS-ON-GRADE PER THE GEOTECHNICAL REPORT, OR AS INDICATED ON THE DRAWINGS AND PROJECT SPECIFICATIONS.

STRUCTURAL OBSERVATIONS

1. STRUCTURAL OBSERVATION SHALL BE PERFORMED BY THE STRUCTURAL ENGINEER OF RECORD OR DESIGNEE IN ACCORDANCE WITH SECTION 1704.6 OF THE CODE.
2. STRUCTURAL OBSERVATION IS THE VISUAL OBSERVATION OF THE ELEMENTS AND CONNECTIONS OF THE STRUCTURAL SYSTEM AT SIGNIFICANT CONSTRUCTION STAGES AND THE COMPLETED STRUCTURE FOR GENERAL CONFORMANCE TO THE APPROVED PLANS AND SPECIFICATION. STRUCTURAL OBSERVATION DOES NOT WAVE THE RESPONSIBILITY FOR THE INSPECTIONS REQUIRED OF THE CITY OR DEPUTY INSPECTORS.
3. THE CONTRACTOR SHALL COORDINATE AND CALL FOR A PRE-CONSTRUCTION MEETING BETWEEN THE ENGINEER OR ARCHITECT RESPONSIBLE FOR THE STRUCTURAL DESIGN. STRUCTURAL OBSERVER, CONTRACTOR, AFFECTED SUBCONTRACTORS, PROJECT INSPECTOR. THE PURPOSE OF THE MEETING SHALL BE TO IDENTIFY THE MAJOR STRUCTURAL ELEMENTS AND CONNECTIONS THAT AFFECT THE VERTICAL AND LATERAL LOAD SYSTEMS OF THE STRUCTURE AND TO REVIEW SCHEDULING OF THE REQUIRED OBSERVATIONS.
4. THE STRUCTURAL OBSERVER SHALL PERFORM SITE VISITS AT THOSE STEPS IN THE PROGRESS OF THE WORK THAT ALLOW FOR CORRECTION OF DEFICIENCIES WITHOUT SUBSTANTIAL EFFORT OR UNCOVERING OF THE WORK INVOLVED. AT A MINIMUM, THE FOLLOWING SIGNIFICANT CONSTRUCTION STAGES REQUIRE A SITE VISIT AND AN OBSERVATION REPORT FROM THE STRUCTURAL OBSERVER.

CONSTRUCTION STAGES	ELEMENTS/CONNECTIONS TO BE OBSERVED
FOUNDATIONS	REINF/CONC/ANCHOR BOLTS
CONCRETE WALLS	REINF/EMBEDS
CONCRETE SLABS	REINF/EMBEDS

5. THE STRUCTURAL OBSERVER SHALL PREPARE A REPORT FOR EACH SIGNIFICANT STATE OF CONSTRUCTION OBSERVED. A COPY OF THE OBSERVATION REPORT SHALL BE SENT TO THE OWNER, CONTRACTOR AND INSPECTOR OF RECORD (IOR).

DESIGN LOADS

1. DEAD LOADS

    SELF-WEIGHT OF MATERIALS

    PRE-ENGINEERED METAL BLDG (PEMB)*

    ROOF DEAD LOAD 2.2 PSF
    SUPERIMPOSED DL 2.0 PSF
    COLLATERAL DL 10.0 PSF

    MODULAR LIVING QUARTERS & GYM (MODULAR)*

    ROOF DEAD LOAD* 13 PSF
    FLOOR DEAD LOAD 8 PSF
2. FLOOR LIVE LOADS:

    PEMB

    STORAGE ROOMS 125 PSF (N0N-REDUCIBLE)

    EQUIPMENT ROOMS 150 PSF (N0N-REDUCIBLE)

    MODULAR LIVE LOADS*

    ASSEMBLY AREAS 100 PSF (N0N-REDUCIBLE)
3. ROOF LIVE LOADS:

    PEMB BLDG ROOF 20 PSF (REDUCIBLE)

    MODULAR 20 PSF (REDUCIBLE)
4. WIND LOADS:

    WIND LOADS ARE IN ACCORDANCE WITH SECTION 1609 OF THE CODE.

    RISK CATEGORY: IV

    WIND SPEED: V_{ult} = 105 MPH (3-SECOND GUST)

    WIND EXPOSURE: C

    INTERNAL PRESSURE COEFFICIENT: $GC_{pi} = \pm 0.18$
5. SEISMIC DESIGN PARAMETERS

DESIGN PARAMETERS	SYMBOL	RECOMMENDED VALUE
SITE CLASS	-	E
MAPPED SPECTRAL ACCELERATION FOR SHORT PERIODS	S_S	1.956g
MAPPED SPECTRAL ACCELERATION FOR A 1-SECOND PERIOD	S_1	0.735g
SITE COEFFICIENT	F_a	1.00
SITE COEFFICIENT	F_v	4.00
DESIGN SPECTRAL RESPONSE ACCELERATION FOR SHORT PERIODS	S_{DS}	1.191g
DESIGN SPECTRAL RESPONSE ACCELERATION FOR 1-SECOND PERIOD	S_{D1}	1.895g

6. SEISMIC ANALYSIS OF PRIMARY STRUCTURE

SEISMIC IMPORTANCE FACTOR, Ie RISK CATEGORY SEISMIC DESIGN CATEGORY ANALYSIS PROCEDURE USED	1.5 IV D STATIC EQUIVALENT LATERAL FORCE PROCEDURE
PEMB SEISMIC FORCE RESISTING SYSTEM	
NORTH/SOUTH DIRECTION	ORDINARY STEEL CONCENTRICALLY BRACED FRAMES / ORDINARY STEEL MOMENT FRAMES
R Ω_0 Cd	3.25 3 3.25
EAST/WEST DIRECTION	ORDINARY STEEL MOMENT FRAMES
R Ω_0 Cd	3.5 3 3
MODULAR SEISMIC FORCE RESISTING SYSTEM	
	ORDINARY STEEL MOMENT FRAMES
R Ω_0 Cd	3.5 3 3

7. LOADING MARKED WITH AN ASTERISK (*) ABOVE WAS PROVIDED BY THE PEMB OR MODULAR FABRICATOR AS APPLICALBE FOR USE IN FOUNDATION DESIGN.

GENERAL

1. THE CONTRACTOR SHALL VERIFY ALL DIMENSIONS PRIOR TO STARTING CONSTRUCTION. THE ENGINEER SHALL BE NOTIFIED OF ANY DISCREPANCIES OR INCONSISTENCIES.
2. ALL DRAWINGS, SPECIFICATIONS AND DOCUMENTS ENUMERATED IN THE OWNER/CONTRACTOR AGREEMENT ARE CONSIDERED TO BE PART OF THE CONTRACT DOCUMENTS. THE CONTRACTOR SHALL BE RESPONSIBLE FOR THE REVIEW AND COORDINATION OF ALL DRAWINGS AND SPECIFICATIONS PRIOR TO THE START OF CONSTRUCTION. ANY DISCREPANCIES THAT OCCUR SHALL BE BROUGHT TO THE ATTENTION OF THE ARCHITECT PRIOR TO START OF CONSTRUCTION SO THAT A CLARIFICATION CAN BE ISSUED. ANY WORK PERFORMED IN CONFLICT WITH THE CONTRACT DOCUMENTS OR ANY CODE REQUIREMENTS SHALL BE CORRECTED BY THE CONTRACTOR AT HIS OWN EXPENSE AND AT NO EXPENSE TO THE OWNER OR ARCHITECT.
3. NOTES AND DETAILS ON DRAWINGS SHALL TAKE PRECEDENCE OVER GENERAL NOTES AND TYPICAL DETAILS. WHERE NO DETAILS ARE GIVEN, CONSTRUCTION SHALL BE AS SHOWN FOR SIMILAR WORK. WHERE CONFLICTS BETWEEN DRAWINGS AND THE SPECIFICATIONS OCCUR, CONSTRUCTION SHALL FOLLOW THE MORE STRINGENT REQUIREMENT UNLESS OTHERWISE APPROVED BY SEOR.
4. ALL WORK SHALL CONFORM TO THE MINIMUM STANDARDS OF THE FOLLOWING CODES:

    2022 CALIFORNIA BUILDING CODE, CALIFORNIA CODE OF REGULATIONS, TITLE 24, PART 2, VOLUME 2 OF 2 AND LATEST REVISIONS ADOPTED PRIOR TO PERMITTING REFERRED TO HERE AS “THE CODE”, AND ANY OTHER REGULATING AGENCIES WHICH HAVE AUTHORITY OVER ANY PORTION OF THE WORK, INCLUDING STATE OF CALIFORNIA DIVISION OF OCCUPATIONAL SAFETY AND HEALTH (DOSH), AND THOSE CODES & STANDARDS LISTED IN THESE NOTES AND SPECIFICATIONS.
5. ALL REFERENCED STANDARDS SHALL BE THE VERSION INDICATED IN CHAPTER 35 OF THE CODE.
6. SEE DRAWINGS PREPARED BY OTHER CONSULTANTS AND/OR VENTORS FOR THE FOLLOWING:
    A. SIZE AND LOCATION OF ALL DOOR AND WINDOW OPENINGS, EXCEPT AS NOTED.
    B. SIZE AND LOCATION OF ALL INTERIOR AND EXTERIOR NON-BEARING PARTITIONS UNLESS NOTED AND/OR DETAILED ON THE STRUCTURAL DRAWINGS.
    C. SIZE AND LOCATION OF ALL CONCRETE CURBS, EQUIPMENT PADS, PITS, FLOOR DRAINS, SLOPES, DEPRESSED AREAS, CHANGES IN LEVEL, CHAMFERS, GROOVES, INSERTS, ETC.
    D. SIZE AND LOCATION OF ALL FLOOR AND ROOF OPENINGS EXCEPT AS SHOWN.
    E. FLOOR AND ROOF FINISHES.
    F. MISCELLANEOUS DRAINAGE AND WATERPROOFING.
    G. ALL FIREPROOFING REQUIREMENTS INCLUDING FIREPROOFING OF STRUCTURAL STEEL.
    H. DIMENSIONS NOT SHOWN ON STRUCTURAL DRAWINGS.
7. SEE MECHANICAL, PLUMBING AND ELECTRICAL DRAWINGS FOR THE FOLLOWING:
    A. PIPE RUNS, SLEEVES, HANGERS, TRENCHES, WALL AND SLAB OPENINGS, ETC., EXCEPT AS SHOWN OR NOTED.
    B. ELECTRICAL CONDUIT RUNS, BOXES, OUTLETS IN WALLS AND SLABS EXCEPT AS SHOWN OR NOTED.
    C. CONCRETE INSERTS FOR ELECTRICAL, MECHANICAL OR PLUMBING FIXTURES, EXCEPT AS SHOWN OR NOTED.
    D. SIZE AND LOCATION OF MACHINE OR EQUIPMENT BASES, ANCHOR BOLTS FOR MOTOR MOUNTS.
8. THE STRUCTURAL CONTRACT DOCUMENTS REPRESENT THE FINISHED STRUCTURE. THEY DO NOT INDICATE THE METHOD OF CONSTRUCTION. CONTRACTOR SHALL PROVIDE ALL MEASURES NECESSARY TO PROTECT THE STRUCTURE DURING CONSTRUCTION, INCLUDING BUT NOT LIMITED TO BRACING, SHORING FOR LOADS DUE TO CONSTRUCTION EQUIPMENT ETC. OBSERVATION VISITS TO THE SITE BY THE STRUCTURAL ENGINEER DO NOT INCLUDE REVIEW OF THE ABOVE ITEMS.
9. INVESTIGATE SITE DURING CLEARING AND EARTHWORK OPERATIONS FOR FILLED EXCAVATIONS OR BURIED STRUCTURES, SUCH AS CESSPOOLS, CISTERNS, FOUNDATIONS, ETC. IF ANY SUCH STRUCTURES ARE FOUND, NOTIFY THE CITY IMMEDIATELY.
10. OPENINGS, POCKETS, PENETRATIONS, NON-STRUCTURAL EMBEDS, ETC. SHALL NOT BE PLACED IN ANY STRUCTURAL MEMBER EXCEPT AS NOTED OR DETAILED ON THESE DRAWINGS. NOTIFY THE STRUCTURAL ENGINEER WHEN DRAWINGS BY OTHERS SHOW SUCH ITEMS PLACED IN A MANNER THAT IS NOT CONSISTENT WITH THE STRUCTURAL DRAWINGS.
11. THE CONTRACT STRUCTURAL DRAWINGS SHOW THE BUILDING IN ITS FINAL INTENDED POSITION. MAKE PROVISIONS IN THE CONSTRUCTION SEQUENCING OF THE BUILDING TO TAKE INTO ACCOUNTS SHRINKAGE, CREEP, SHORTENING, THERMAL EXPANSION, ETC..
12. CONTRACTOR SHALL PROVIDE FOR DESIGN AND INSTALLATION OF ALL CRIBBING, SHEATHING AND SHORING REQUIRED AND SHALL BE SOLELY RESPONSIBLE FOR ALL EXCAVATION PROCEDURES INCLUDING LAGGING, SHORING AND PROTECTION OF ADJACENT PROPERTY, STRUCTURES, STREETS AND UTILITIES IN ACCORDANCE WITH ALL NATIONAL, STATE AND LOCAL SAFETY ORDINANCES.
13. COORDINATE AND VERIFY EDGE OF SLAB DIMENSIONS PRIOR TO FABRICATION OR PLACEMENT OF FORMWORK.
14. OBTAIN AN UNDERGROUND SERVICE ALERT INQUIRY IDENTIFICATION NUMBER AT LEAST TWO WORKING DAYS BEFORE STARTING WORK WITH THIS PERMIT. DIAL 811 (OR 1-800-422-4133 FOR SOUTHERN CALIFORNIA PROJECTS)
15. THE CONTRACTOR SHALL VERIFY THE EXTENT AND LOCATIONS OF SITE UTILITIES PRIOR TO EXCAVATION OR SHORING , THERE MAY BE DISCREPANCIES BETWEEN THE LOCATION INDICATED ON THE SITE SURVEY AND ACTUAL VERIFIED LOCATIONS. IF THE ACTUAL FIELD VERIFIED LOCATION OF UTILITIES COULD RESULT IN A CONFLICT WITH THE NEW CONSTRUCTION OR SHORING, THE ENGINEER SHALL BE NOTIFIED IMMEDIATELY.
16. CONTRACTOR SHALL COORDINATE SHORING WITH DRAWINGS OF RECORD TO ENSURE PROVISIONS FOR POCKETS, BLOCKOUTS, OFFSETS, STEPPED FOOTINGS AND ANY OTHER ITEMS AFFECTED BY THE SHORING.
17. VERIFY THAT THE ACTUAL OPERATING WEIGHT OF ALL EQUIPMENT DOES NOT EXCEED THAT SHOWN ON THE DRAWINGS. NOTIFY THE ARCHITECT OF ANY DISCREPANCIES PRIOR TO INSTALLATION.
18. CONTRACTOR SHALL SUBMIT PLANS SHOWING ALL PROPOSED OPENINGS (SIZE & LOCATIONS) TO AOR & SEOR FOR REVIEW AND APPROVAL BEFORE START OF WORK.
19. STOCK PILING OR STORAGE OF MATERIAL ON OR NEAR SHOWING BULKHEAD IS NOT PERMITTED.

REV.	DESCRIPTION	CK'D	APP	DATE
2	PLAN CHECK 2			2/17/26
1	PLAN CHECK 1			8/11/25

kpff
700 S. Flower St., Suite 2100
Los Angeles, CA 90017
O: 213.418.0201
www.kpff.com

REGISTERED PROFESSIONAL ENGINEER RODRIGO A. TORO PAVEZ No. S6043 STRUCTURAL STATE OF CALIFORNIA

PUBLIC WORKS DEPARTMENT ENGINEERING DIVISION
CITY OF SAN BUENAVENTURA

INTERIM FIRE STATION NO. 7

STRUCTURAL GENERAL NOTES

DRN. BY: CC | DES. BY: KK | CK'D. BY: -

PRINCIPAL ENGINEER — DATE: 5 May 2026

CITY ENGINEER — DATE: 5/7/2026

SPEC. NUMBER 2025-010 | PROJECT NO. FA11-1061

SEPTEMBER 7, 2025 | SHEET 22 OF 151 | DWG. NO. 2025-D-010

2/17/2026 3:17:50 PM
\\EgnyteDrive\projects\2024\2400557 - City of Ventura Fire Station No. 7 - Apparatus Bay Foundation\6 SRevit\2400557_CioV-Fire Station 7_R24.rvt

TABLE 1 - REQUIRED SPECIAL INSPECTIONS

SYSTEM OR MATERIAL	INSPECTION: INSPECTION TYPE	INSPECTION: CODE REFERENCE	INSPECTION: REFERENCED STANDARDS	REMARKS
SOILS				
1. VERIFY MATERIALS BELOW FOOTINGS ARE ADEQUATE TO ACHIEVE THE DESIGN BEARING CAPACITY	PERIODIC			
2. VERIFY EXCAVATIONS ARE EXTENDED TO PROPER DEPTH AND HAVE REACHED PROPER MATERIAL	PERIODIC			
3. PERFORM CLASSIFICATION AND TESTING OF CONTROLLED FILL MATERIALS	PERIODIC	1705.6	GEOTECHNICAL REPORT	BY THE GEOTECHNICAL ENGINEER
4. VERIFY USE OF PROPER MATERIALS, DENSITIES AND LIFT THICKNESS DURING PLACEMENT AND COMPACTION OF CONTROLLED FILL	CONTINUOUS			
5. PRIOR TO PLACEMENT OF COMPACTED FILL, INSPECT SUBGRADE AND VERIFY THAT SITE HAS BEEN PREPARED PROPERLY	PERIODIC			
GEOTECHNICAL				
FILL IN-PLACE DENSITY OR PREPARED SUBGRADE DENSITY		1705.6	ASTM D1557	BY GEOTECHNICAL ENGINEER
MATERIAL VERIFICATION			CLASSIFICATION AND TESTING OF CONTROLLED FILL MATERIAL	BY GEOTECHNICAL ENGINEER
CONCRETE				
CONCRETE STRENGTH			ASTM C39	
CONCRETE SLUMP			ASTM C143	
CONCRETE AIR CONTENT		1903 1705.3	ASTM C231	FABRICATE SPECIMENS AT TIME FRESH CONCRETE IS PLACED. TEST EACH 150 CY NOR LESS THAN EACH 5000 SF OF SLAB OR WALL PLACED EACH DAY
CONCRETE TEMPERATURE			ASTM C1064	
UNIT WEIGHT OF FRESH STRUCTURAL LIGHTWEIGHT CONCRETE			ASTM C567	
FLOOR FLATNESS AND LEVELNESS			ASTM E1155	TEST WITHIN 24 HOURS OF FINISHING
SHOTCRETE STRENGTH		1910.5 1910.10	ASTM C39	SPECIMEN TAKEN FROM THE IN-PLACE OR FROM TEST PANELS. EACH 50 CY NOR LESS THAN EACH 5000 SF OF WALL PLACED EACH SHIFT
1. INSPECT REINFORCEMENT, INCLUDING PRESTRESSING TENDONS AND VERIFY PLACEMENT	PERIODIC	1705.3 1908.4	ACI 318 CHAPTER 20, 25.2 - 25.3, 26.6.1 - 26.6.3	TOLERANCE AND REINFORCING PLACEMENT PER ACI 318, SECTION 26.6.2
2. REINFORCING BAR WELDING				
A. VERIFY WELDABILITY OF REINFORCING BARS OTHER THAN ASTM A706	PERIODIC	1705.3	ACI 318 26.6.4 AWS D1.4, SECTION 7	VISUALLY INSPECT ALL WELDS. MATERIAL VERIFICATION OF REINFORCING STEEL FOR WELDING (CERTIFIED MILL TEST REPORTS), VERIFICATION OF WELD FILLER METALS, USE OF PROPER WPS'S AND WELDER QUALIFICATIONS
B. INSPECT SINGLE-PASS FILLET WELDS, MAXIMUM 5/16"	PERIODIC			
C. INSPECT ALL OTHER WELDS	CONTINUOUS			
3. INSPECT ANCHORS CAST IN CONCRETE	PERIODIC		ACI 318 17.8.2	
4. INSPECT ANCHORS POST-INSTALLED IN HARDENED CONCRETE MEMBERS.				INSPECTION REQUIREMENTS PER ICC EVALUATION REPORT. VERIFY THAT ADHESIVE ANCHORS INSTALLED IN HORIZONTALLY OR UPWARDLY INCLINED ORIENTATION ARE INSTALLED BY CERTIFIED INSTALLERS.
A. ADHESIVE ANCHORS INSTALLED IN HORIZONTALLY OR UPWARDLY INCLINED ORIENTATION TO RESIST SUSTAINED TENSION LOADS.	CONTINUOUS		ACI 318 17.8.2.4	
B. MECHANICAL ANCHORS AND ADHESIVE NOT DEFINED IN 4A.	PERIODIC		ACI 318 17.8.2	
5. VERIFY USE OF REQUIRED DESIGN MIX	PERIODIC	1904.1, 1904.2, 1908.2, 1908.3	ACI 318 CH 19, 24.4.3, 26.4.4	VERIFY THAT ALL MIXES USED COMPLY WITH APPROVED CONSTRUCTION DOCUMENTS AND REFERENCED CODES AND STANDARDS
6. PRIOR TO CONCRETE PLACEMENT, FABRICATE SPECIMENS FOR STRENGTH TEST, PERFORM SLUMP AND AIR CONTENT TESTS, AND DETERMINE TEMPERATURE OF CONCRETE.	CONTINUOUS	1908.10	ASTM C172 ASTM C31 ACI 318 26.4, 26.12	
7. INSPECT CONCRETE AND SHOTCRETE PLACEMENT FOR PROPER APPLICATION TECHNIQUES.	CONTINUOUS	1904.6, 1908.7, 1908.8	ACI 318 26.5	
8. VERIFY MAINTENANCE OF SPECIFIED CURING TEMPERATURE AND TECHNIQUES.	PERIODIC	1908.9	ACI 318 26.5.3 - 26.5.5	
9. VERIFY IN-SITU CONCRETE STRENGTH, PRIOR TO STRESSING OF TENDONS IN POST-TENSIONED CONCRETE AND PRIOR TO REMOVAL OF SHORES AND FORMS FROM BEAMS AND STRUCTURAL SLABS.	PERIODIC		ACI 318 26.11.2	
10. INSPECT FORMWORK FOR SHAPE, LOCATION, AND DIMENSIONS OF CONCRETE MEMBER BEING FORMED.	PERIODIC		ACI 318 26.11.1.2(b)	
11. INSPECT INSTALLATION OF MECHANICAL COUPLING DEVICES.	CONTINUOUS		ICC EVALUATION REPORT	VERIFY GRADE AND SIZE OF REBAR BEING SPLICED, COUPLER IDENTIFICATION AND POSITION, AND INSTALLATION OF COUPLER
DESIGNATED SEISMIC SYSTEM				
1. DESIGNATED SEISMIC SYSTEM	PERFORM	1705.12.4		EXAMINE DESIGNATED SEISMIC SYSTEMS REQUIRING QUALIFICATION IN ACCORDANCE WITH SECTION 13.2.2 OF ASCE 7 AND VERIFY THAT THE LABEL, ANCHORAGE, AND MOUNTING CONFORM TO THE CERTIFICATE OF COMPLIANCE

TABLE 1 (CONT.) - REQUIRED SPECIAL INSPECTIONS

SYSTEM OR MATERIAL	INSPECTION: INSPECTION TYPE	INSPECTION: CODE REFERENCE	INSPECTION: REFERENCED STANDARDS	REMARKS
STEEL				
INSPECTION TASKS PRIOR TO WELDING				
1. WELDING PROCEDURE SPECIFICATIONS (WPSs) AVAILABLE	PERFORM			
2. MANUFACTURER CERTIFICATION FOR WELDING CONSUMABLES AVAILABLE	PERFORM			
3. MATERIAL IDENTIFICATION (TYPE/GRADE)	OBSERVE			
4. WELDER IDENTIFICATION SYSTEM	OBSERVE	1705.2.1	AISC 360, TABLE N5.4-1 AISC 341, TABLE J6-1	
5. FIT-UP GROOVE WELDS (INCLUDING JOINT GEOMETRY)	OBSERVE			VERIFY JOINT PREPARATION, DIMENSIONS, CLEANLINESS, TACK WELD QUALITY, BACKING TYPE AND FIT
6. CONFIGURATION AND FINISH OF ACCESS HOLE	OBSERVE			
7. FIT-UP OF FILLET WELDS	OBSERVE			VERIFY ALIGNMENT, GAPS AT ROOT, CLEANLINESS OF STEEL SURFACES, AND QUALITY OF TACK WELD
8. CHECK WELDING EQUIPMENT	OBSERVE			
INSPECTION TASKS DURING WELDING				
1. USE OF QUALIFIED WELDERS	OBSERVE			
2. CONTROL AND HANDLING OF WELDING CONSUMABLES	OBSERVE			VERIFY PACKAGING AND EXPOSURE CONTROL
3. NO WELDING OVER TACK WELDS	OBSERVE			
4. ENVIRONMENTAL CONDITIONS	OBSERVE	1705.2.1	AISC 360, TABLE N5.4-2 AISC 341, TABLE J6-2	VERIFY WIND SPEED IS WITHIN LIMITS AS WELL AS PRECIPITATION AND TEMPERATURE
5. WELDING PROCEDURE SPECIFICATION (WPS) FOLLOWED	OBSERVE			VERIFY SETTINGS ON WELDING EQUIPMENT, TRAVEL SPEED, SELECTED WELDING MATERIALS, SHIELDING GAS TYPE/FLOW RATE, PREHEAT APPLIED, INTERPASS TEMPERATURE MAINTAINED, AND PROPER POSITION (F, V, H, OH)
6. WELDING TECHNIQUES	OBSERVE			VERIFY INTERPASS AND FINAL CLEANING, PROFILE LIMITATIONS AND QUALITY OF EACH PASS
INSPECTION TASKS AFTER WELDING				
1. WELDS CLEANED	OBSERVE			
2. SIZE, LENGTH, AND LOCATION OF WELDS	PERFORM			
3. WELDS MEET VISUAL ACCEPTANCE CRITERIA	PERFORM			VERIFY CRACK PROHIBITION, WELD/BASE-METAL FUSION, CRATER CROSS SECTION, WELD PROFILES AND SIZE, UNDERCUT, AND POROSITY. DOCUMENT FINDINGS IN REPORT.
4. ARC STRIKES	PERFORM			
5. K-AREA	PERFORM	1705.2.1	AISC 360, TABLE N5.4-3 AISC 341, TABLE J6-3	VISUALLY INSPECT WEB IN K-AREA FOR CRACKS WITHIN 3" OF WELD WHERE WELDS ARE PROVIDED IN THE K-AREA.
6. BACKING REMOVED AND WELD TABS REMOVED WHERE REQUIRED	PERFORM			
7. PLACEMENT OF REINFORCING OR CONTOURING FILLET WELDS WHERE REQUIRED	PERFORM			
8. REPAIR ACTIVITIES	PERFORM			
9. DOCUMENT ACCEPTANCE OR REJECTION OF WELDED JOINT OR MEMBER	PERFORM			
INSPECTION TASKS PRIOR TO BOLTING				
1. MANUFACTURER'S CERTIFICATIONS AVAILABLE FOR FASTENER MATERIALS	PERFORM			
2. FASTENERS MARKED IN ACCORDANCE WITH ASTM REQUIREMENTS	OBSERVE			
3. PROPER FASTENER SELECTED FOR THE JOINT DETAIL.	OBSERVE			VERIFY GRADE, TYPE, BOLT LENGTH IF THREADS ARE TO BE EXCLUDED FROM SHEAR PLANE.
4. PROPER BOLTING PROCEDURE SELECTED FOR THE JOINT DETAIL	OBSERVE	1705.2.1	AISC 360, TABLE N5.6-1 AISC 341, TABLE J7-1	
5. CONNECTING ELEMENTS MEET APPLICABLE REQUIREMENTS	OBSERVE			VERIFY FAYING SURFACE CONDITION AND HOLD PREPARATION
6. PRE-INSTALLATION VERIFICATION TESTING BY INSTALLING PERSONNEL OBSERVED AND DOCUMENTED FOR FASTENER ASSEMBLIES AND METHODS USED.	OBSERVE			
7. PROPER STORAGE PROVIDED FOR BOLTS, NUTS, WASHERS AND OTHER FASTENER COMPONENT	OBSERVE			

1

STRUCTURAL STEEL

1. STRUCTURAL STEEL SHALL BE DETAILED, FABRICATED AND ERECTED IN ACCORDANCE WITH CHAPTER 22 OF THE CODE AND THE FOLLOWING REFERENCES:
   A. AISC 303 - "CODE OF STANDARD PRACTICE FOR STEEL BUILDINGS AND BRIDGES"
   B. AISC 360 - "SPECIFICATIONS FOR STRUCTURAL STEEL BUILDINGS"
   C. AISC 341 - "SEISMIC PROVISIONS FOR STRUCTURAL STEEL BUILDINGS" FOR MEMBERS OF THE SEISMIC FORCE RESISTING SYSTEM (SFRS)
   D. RCSC's - "SPECIFICATIONS FOR STRUCTURAL JOINTS USING HIGH STRENGTH BOLTS"
2. COMPLY WITH THE FOLLOWING PROVISIONS FOR ALL WELDED JOINTS:
   A. AWS D1.1 - "STRUCTURAL STEEL WELDING CODE"
   B. AWS D1.8 - "SEISMIC SUPPLEMENT" FOR CONNECTIONS OF THE SEISMIC FORCE RESISTING SYSTEM (SFRS)
3. ALL STRUCTURAL STEEL SHALL CONFORM TO THE ASTM DESIGNATION AS INDICATED BELOW (UNO):

	ASTM SPECIFICATION
ANCHOR RODS	F1554 GR 55 F1554 GR 36/105 (WHERE INDICATED)

4. THE STRUCTURAL STEEL FABRICATOR SHALL FURNISH SHOP DRAWINGS TO THE ENGINEER OF ALL STEEL FOR STRUCTURAL ENGINEER'S REVIEW AND APPROVAL BEFORE FABRICATION.
5. ALL WELDING IS TO BE DONE BY CERTIFIED WELDERS USING E70XX ELECTRODES (UNO). ALL WELDS SHALL BE IN CONFORMITY WITH THE PROJECT SPECIFICATIONS AND THE CODE FOR WELDING IN BUILDING CONSTRUCTION (AWS D1.1 - 15) OF THE AMERICAN WELDING SOCIETY. SEE SPECIAL INSPECTION SECTION FOR WELDING INSPECTION REQUIREMENTS.
6. WELD LENGTHS CALLED FOR ON PLANS ARE THE NET EFFECTIVE LENGTH REQUIRED. WHERE FILLET WELD SYMBOL IS GIVEN WITHOUT INDICATION OF SIZE, USE MINIMUM SIZE WELDS AS SPECIFIED IN AISC 360 SECTION J2.2b.
7. ALL STRUCTURAL STEEL AND MISCELLANEOUS METAL EXPOSED TO THE WEATHER SHALL BE HOT DIP GALVANIZED AFTER FABRICATION. PROTECT FIELD WELDS EXPOSED TO THE WEATHER VIA PRIME AND PAINT OR BRUSH/COLD GALVANIZING. REFER TO ARCHITECTURAL DRAWINGS FOR STEEL FINISH.
8. DO NOT CUT OR DAMAGE EXISTING REINFORCEMENT. PRIOR TO FABRICATING PLATES, MEMBERS, OR OTHER STEEL ASSEMBLIES ATTACHED TO REINFORCED CONCRETE/MASONRY USING POST-INSTALLED ANCHORS, LOCATE ALL REINFORCEMENT AND CONFIRM CONSTRUCTABILITY OF ANCHOR LOCATIONS. SHOULD CONFLICTS WITH REINFORCEMENT OCCUR, SUBMIT ALTERNATE ANCHOR LOCATIONS AND REVISED STEEL FABRICATIONS TO ARCHITECT FOR REVIEW AND APPROVAL.
9. BACKUP BARS MAY REMAIN IN PLACE UNLESS NOTED OTHERWISE ON THE DRAWINGS, OR WHEN ULTRASONIC TESTING INDICATES A POSSIBLE WELD DEFECT. IF DEFECTS ARE INDICATED BACKUP BAR IS TO BE REMOVED AND THE ROOT INSPECTED. IF IMPERFECTIONS ARE FOUND, THEY ARE TO BE REMOVED AND REPAIRED PER AWS REQUIREMENTS.
10. THE USE OF E70T-4 WELDING WIRE IS NOT ALLOWED FOR ANY APPLICATION. ALL WELD FILLER METAL SHALL BE OF THE LOW HYDROGEN TYPE.
11. WRITTEN WELDING PROCEDURE SPECIFICATIONS (WPS) PER THE RECOMMENDATION OF THE AMERICAN WELDING SOCIETY (AWS) SHALL BE DEVELOPED BY THE FABRICATOR/ERECTOR AND SUBMITTED FOR REVIEW TO THE ENGINEER PRIOR TO ANY WELDING OF THE STRUCTURAL STEEL. THE WELDING PROCEDURES SHALL INCLUDE ALL THE WELDED JOINTS AND CONFIGURATIONS TO BE USED ON THIS PROJECT-ONLY WPS WHICH ARE RELEVANT TO THIS PROJECT SHALL BE SUBMITTED. ALL WELDED JOINTS SHALL BE PREQUALIFIED PER AWS OR BE QUALIFIED BY TEST PER AWS. A PROCEDURE QUALIFICATION RECORD (PQR) SHALL BE INCLUDED WITH THE WPS IF THE WELDING PROCEDURE OR JOINT IS QUALIFIED BY TESTING. THE ELECTRODE MANUFACTURER AND PRODUCT/TRADE NAME SHALL BE IDENTIFIED IN THE WPS IN ADDITION TO THE AWS ELECTRODE CLASSIFICATION NAME. A COPY OF THE ELECTRODE MANUFACTURER'S TECHNICAL DATA SHEETS WITH THE RECOMMENDED WELDING PARAMETERS SHALL BE SUBMITTED WITH THE WPS.

SPECIAL INSPECTIONS

1. THE FOLLOWING ELEMENTS OF CONSTRUCTION SHALL HAVE CONTINUOUS INSPECTION BY A PROJECT INSPECTOR APPROVED BY THE JURISDICTION.
   A. CONCRETE.
   B. BOLTS INSTALLED IN CONCRETE.
   C. PLACING OF REINFORCING STEEL.
   D. SEE GEOTECHNICAL ENGINEER'S REPORT FOR SPECIFIC INSPECTION REQUIREMENTS BY A SOILS ENGINEER REPRESENTATIVE.
2. ALL SPECIAL INSPECTIONS SHALL BE PERFORMED IN ACCORDANCE WITH THE REQUIREMENTS OF SECTION 1704 OF THE CODE AND ANY ADDITIONAL REQUIREMENTS STATED IN THESE DRAWINGS AND/OR THE PROJECT SPECIFICATIONS.
3. OWNER WILL RETAIN A QUALIFIED, INDEPENDENT SPECIAL INSPECTION AGENCY TO PERFORM SPECIAL INSPECTIONS AND TESTS PER CHAPTER 17 OF THE CODE. REFER TO TABLE 1 FOR TESTS AND INSPECTIONS THAT WILL BE PERFORMED.
4. SPECIAL INSPECTOR WILL OBSERVE THE INDICATED WORK FOR COMPLIANCE WITH THE APPROVED CONSTRUCTION DOCUMENTS. ALL NON-CONFORMING WORK WILL BE BROUGHT TO THE ATTENTION OF THE CONTRACTOR FOR CORRECTION AND NOTED IN THE INSPECTION REPORTS.
5. TESTING FREQUENCIES IDENTIFIED IN THE STATEMENT OF SPECIAL INSPECTION ARE DEFINED AS FOLLOWS:
   a. CONTINUOUS: THE FULL-TIME OPERSERVATION OF WORK REQUIRING SPECIAL INSPETION BY THE SPECIAL INSPECTOR WHO IS PRESENT IN THE AREA WHERE THE WORK IS BEING PERFORMED.
   b. PERIODIC: THE PART-TIME OR INTERMITTENT OBSERVATION OF WORK REQUIRING SPECIAL INSPECTION BY THE SPECIAL INSPECTOR WHO IS PRESENT IN THE AREA WHERE THE WORK IS BEEN OR IS BEING PERFORMED AND AT THE COMPLETION OF THE WORK.
   c. OBSERVE: THE SPECAIL INSPECTOR WILL OBSERVE THESE ITEMS ON A RANDOM BASIS. OPERATIONS NEED NOT BE DELAYED PENDING THESE INSPECTIONS.
   d, PERFORM: THE SPECIAL INSPECTOR WILL PERFORM THESE TASKS FOR EACH ELEMENT.
   e. DOCUMENT: THE SPECIAL INSPECTOR WILL DOCUMENT IN A REPORT THAT THE WORK HAS BEEN PERFORMED IN ACCORDANCE WITH THE CONTRACT DOCUMENTS.

REV.	DESCRIPTION	CK'D	APP	DATE
2	PLAN CHECK 2			2/17/26
1	PLAN CHECK 1			8/11/25

kpff
700 S. Flower St., Suite 2100
Los Angeles, CA 90017
O: 213.418.0201
www.kpff.com

PUBLIC WORKS DEPARTMENT ENGINEERING DIVISION
CITY OF SAN BUENAVENTURA

INTERIM FIRE STATION NO. 7

STRUCTURAL GENERAL NOTES

DRN. BY: CC | DES. BY: KK | CK'D. BY: -

REGISTERED PROFESSIONAL ENGINEER RODRIGO A. TORO PAVEZ No. S6043 STRUCTURAL STATE OF CALIFORNIA

PRINCIPAL ENGINEER 5 May 2026 DATE

CITY ENGINEER 5/7/2026 DATE

SPEC. NUMBER 2025-010 | PROJECT NO. FA11-1061

SEPTEMBER 7, 2025 | SHEET 23 OF 151 | DWG. NO. 2025-D-010

2/17/2026 3:17:50 PM
\\EgnyteDrive\projects\2024\2400557 - City of Ventura Fire Station No. 7 - Apparatus Bay Foundation\6 SRevit\2400557_CioV-Fire Station 7_R24.rvt

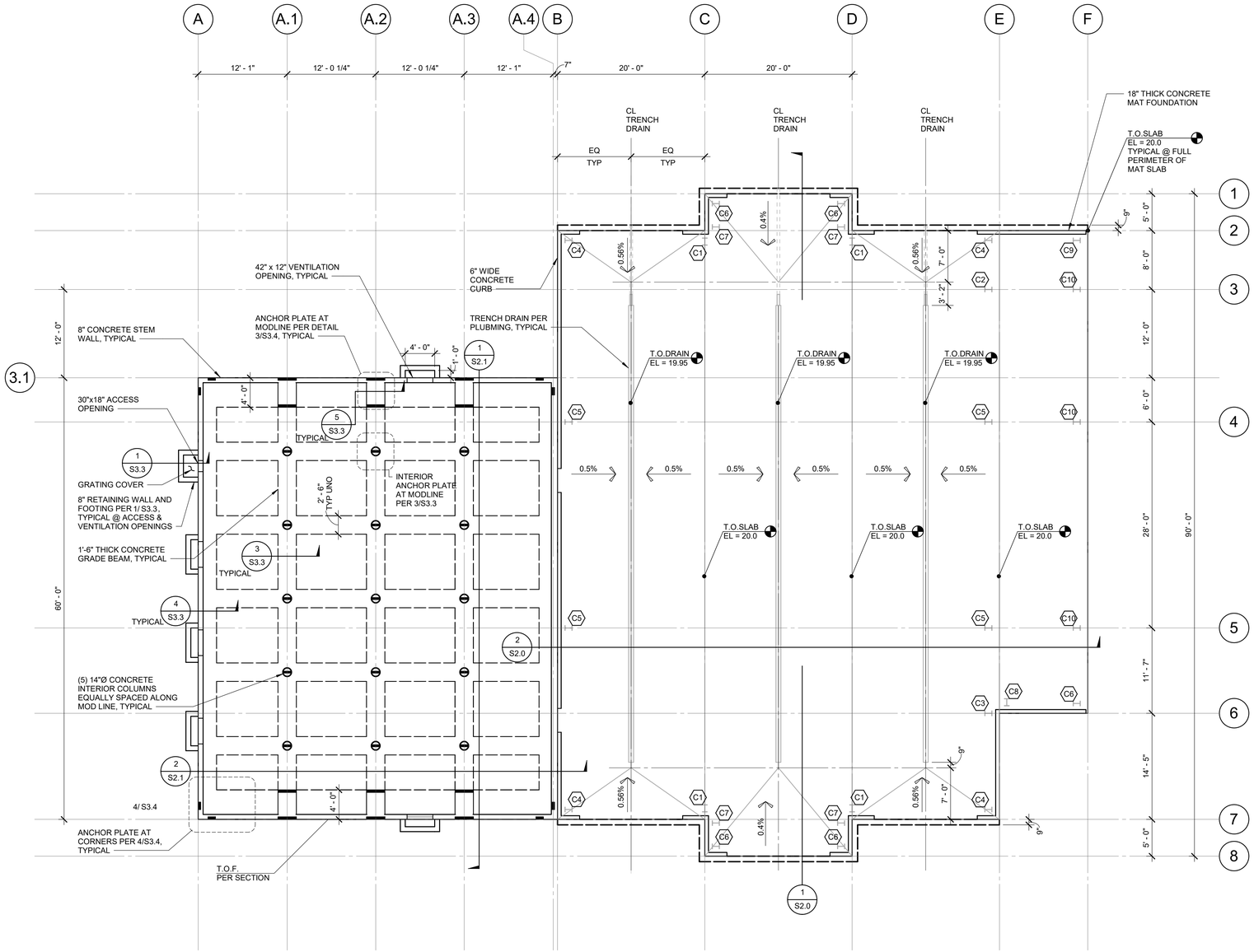

PLAN NOTES

1. SEE SHEETS S0.1 AND S0.2 FOR GENERAL NOTES.
2. SEE SHEETS S3.0 & S3.1 FOR TYPICAL CONCRETE DETAILS.
3. PRE-ENGINEERED METAL BUILDING DESIGN AND CONSTRUCTION SHALL INCLUDE CEILING AND STUD WALLS AT STORAGE ROOM, & STUD WALLS AT PERIMETER,
4. ALL ADDED BAR SHALL BE STAGGERED WITH UNIFORM REINFORCEMENT.
5. CONTRACTOR TO CONSULT WITH SEOR FOR PREFERRED CONSTRUCTION JOINT LOCATIONS.
6. CONTRACTOR SHALL SUBMIT A DRAWING SHOWING ALL OF THE PROPOSED FINAL PREPARATION AND OPENING LOCATIONS TO SEOR FOR APPROVAL PRIOR TO CONCRETE POUR.
7. VERIFY SIZE AND NUMBER OF ANCHOR BOLTS AND THEIR LOCATIONS WITH PRE-ENGINEERING METAL BUILDING DRAWINGS.
8. PRE-ENGINEERED METAL BUILDING DESIGN NOT PART OF FOUNDATION SCOPE.
9. MODULAR BUILDING DESIGN NOT PART OF FOUNDATION SCOPE.

TYPICAL FOUNDATION LEGEND:

- INDICATES CONCRETE GRADE BEAM, SEE PLAN FOR SIZE
- INDICATES CONCRETE RETAINING WALL. SEE PLAN FOR SIZE.
- C# — COLUMN ANCHOR ROD ANCHORAGE DETAILS ON S3.2
- INDICATES TOP OF SLAB
- INDICATES COLUMN LOCATION, REFER TO PRE-ENGINEERED METAL BUILDING DRAWINGS BY OTHERS
- INDICATES SLOPE OF TOP OF SLAB

1 PRE-ENGINEERED METAL BUILDING APPARATUS BAY AND LIVING QUARTERS FOUNDATION PLAN

SCALE : 1/8" = 1'-0"

REV.	DESCRIPTION	CK'D	APP	DATE
2	PLAN CHECK 2			2/17/26
1	PLAN CHECK 1			8/11/25

kpff
700 S. Flower St., Suite 2100
Los Angeles, CA 90017
O: 213.418.0201
www.kpff.com

PUBLIC WORKS DEPARTMENT ENGINEERING DIVISION
CITY OF SAN BUENAVENTURA

INTERIM FIRE STATION NO. 7

FOUNDATION PLAN

DRN. BY: CC DES. BY: KK CK'D. BY: -

PRINCIPAL ENGINEER — DATE: 5 May 2026

CITY ENGINEER — DATE: 5/7/2026

SPEC. NUMBER 2025-010 PROJECT NO. FA11-1061

SEPTEMBER 7, 2025 SHEET 24 OF 151 DWG. NO. 2025-D-010

REINFORCING PLAN NOTES

1. FOR TYPICAL SECTION AT STRUCTURAL SLAB SEE SHEET S2.0
2. ALL REINFORCING IN "N-S" DIRECTION TO BE PLACED IN OUTER LAYER.

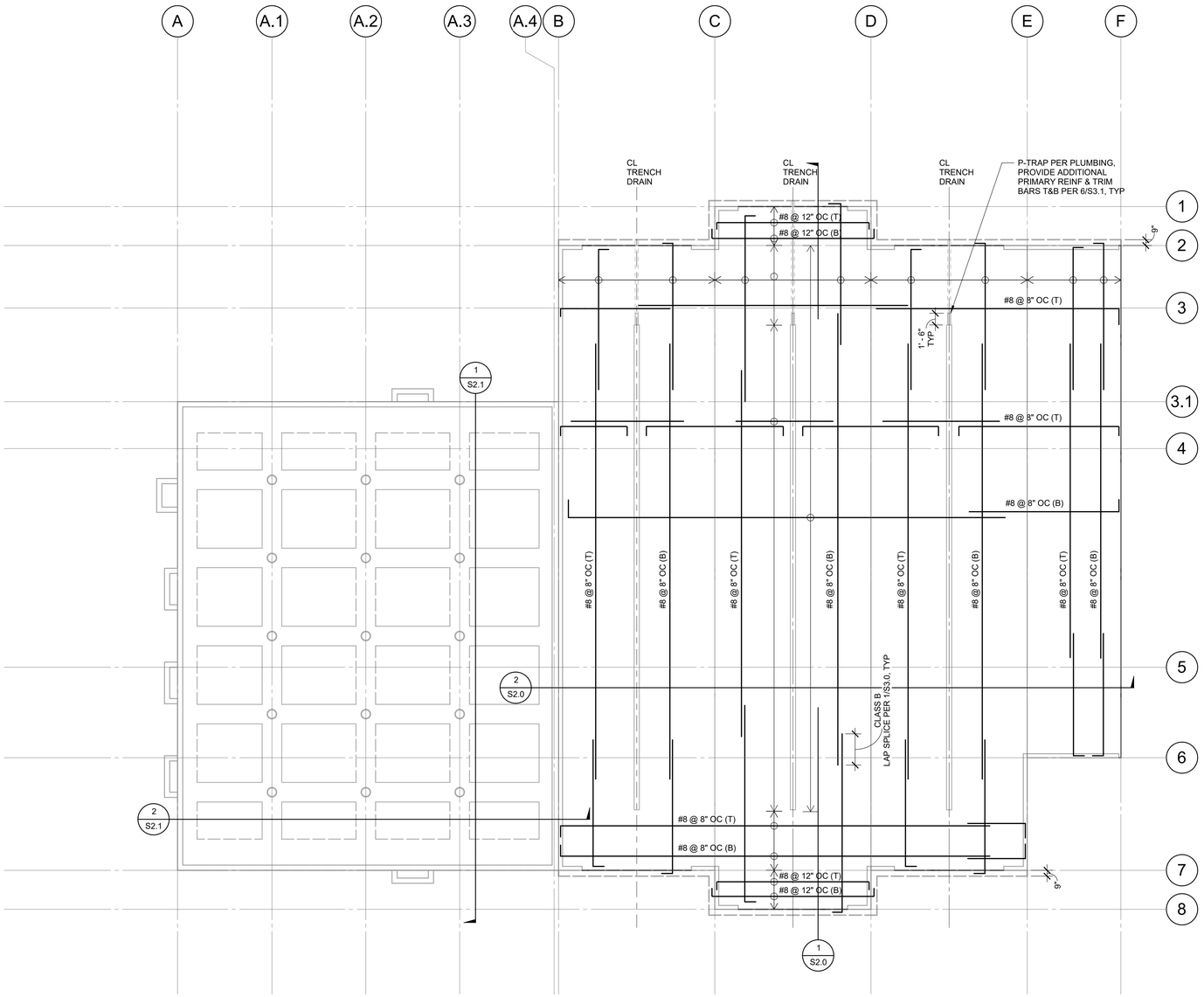

"N-S"
"E-W"

1 MAT FOUNDATION REINFORCEMENT PLAN
SCALE : 1/8" = 1'-0"

REV.	DESCRIPTION	CK'D	APP	DATE
2	PLAN CHECK 2			2/17/26
1	PLAN CHECK 1			8/11/25

PUBLIC WORKS DEPARTMENT ENGINEERING DIVISION
CITY OF SAN BUENAVENTURA

kpff
700 S. Flower St., Suite 2100
Los Angeles, CA 90017
O: 213.418.0201
www.kpff.com

INTERIM FIRE STATION NO. 7

REINFORCING PLAN

DRN. BY: CC DES. BY: KK CK'D. BY: -

PRINCIPAL ENGINEER — DATE: 5 May 2026

CITY ENGINEER — DATE: 5/7/2026

REGISTERED PROFESSIONAL ENGINEER — DAVID A. TORO PAREDES — No. 56042 — STRUCTURAL — STATE OF CALIFORNIA

SPEC. NUMBER 2025-010 PROJECT NO. FA11-1061

SEPTEMBER 7, 2025 SHEET 25 OF 151 DWG. NO. 2025-D-010

2/17/2026 3:17:51 PM
Y:\Projects\Active\2025\2025-010\2025-010 - City of Ventura Fire Station No. 7 - Apparatus Bay Foundations\6-Structural\2025-010_Civil Fire Station 7_R24.rvt

PLAN NOTES

1. SEE SHEETS S0.1 AND S0.2 FOR GENERAL NOTES.
2. SEE SHEETS S3.0 & S3.1 FOR TYPICAL CONCRETE DETAILS.
3. CONTRACTOR SHALL SUBMIT A DRAWING SHOWING ALL OF THE PROPOSED FINAL PREPARATION AND OPENING LOCATIONS TO SEOR FOR APPROVAL PRIOR TO CONCRETE POUR.
4. MODULAR BUILDING DESIGN NOT PART OF FOUNDATION SCOPE.

TYPICAL FOUNDATION LEGEND:

INDICATES CONCRETE GRADE BEAM, SEE PLAN FOR SIZE.

INDICATES CONCRETE RETAINING WALL, SEE PLAN FOR SIZE.

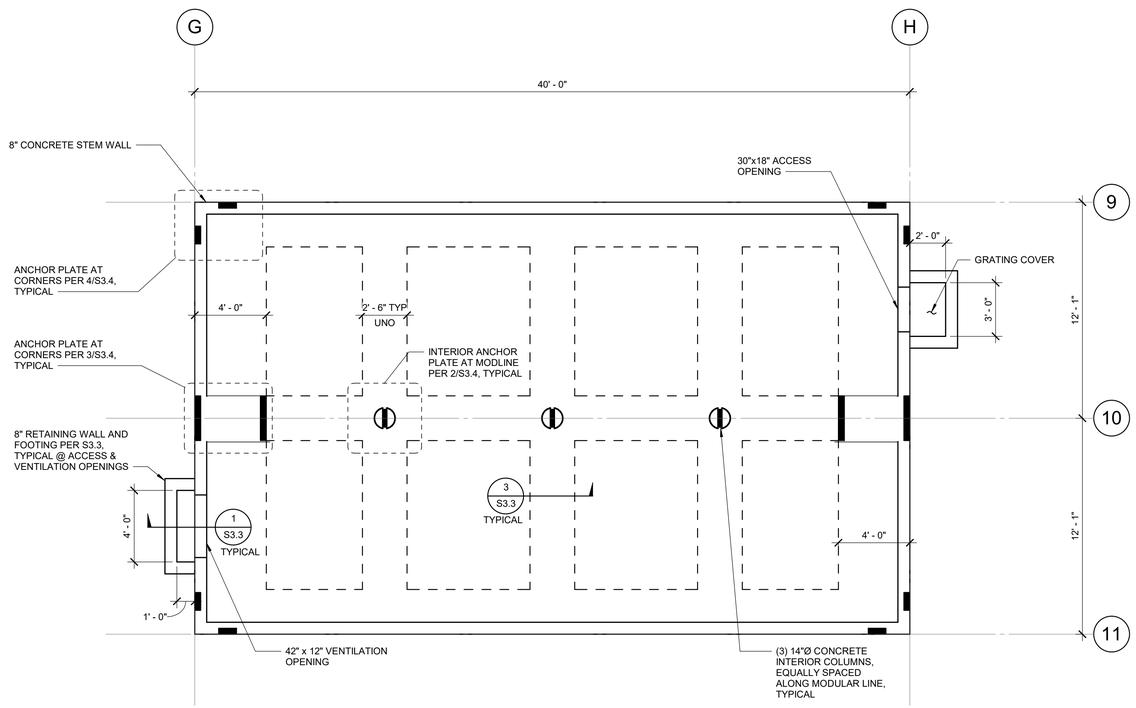

1 MODULAR GYM FOUNDATION
SCALE : 1/4" = 1'-0"

REV.	DESCRIPTION	CK'D	APP	DATE
2	PLAN CHECK 2			2/17/26
1	PLAN CHECK 1			8/11/25

PUBLIC WORKS DEPARTMENT ENGINEERING DIVISION
CITY OF SAN BUENAVENTURA

INTERIM FIRE STATION NO. 7

MODULAR GYM FOUNDATION

kpff
700 S. Flower St., Suite 2100
Los Angeles, CA 90017
O: 213.418.0201
www.kpff.com

DRN. BY: Author DES. BY: Designer CK'D. BY: Checker

PRINCIPAL ENGINEER 5 May 2026 DATE

CITY ENGINEER 5/7/2026 DATE

REGISTERED PROFESSIONAL ENGINEER DAVID A. TORI No. S6043 STRUCTURAL STATE OF CALIFORNIA

SPEC. NUMBER 2025-010 PROJECT NO. FA11-1061

SEPTEMBER 7, 2025 SHEET 26 OF 151 DWG. NO. 2025-D-010

2/17/2026 3:17:51 PM
\\kpffsdc\shared\projects\2020\2020057 - City of Ventura Fire Station No. 7 - Appendix Bay Foundations\6 SDevel\2020057_Civil Fire Station 7_R24.rvt

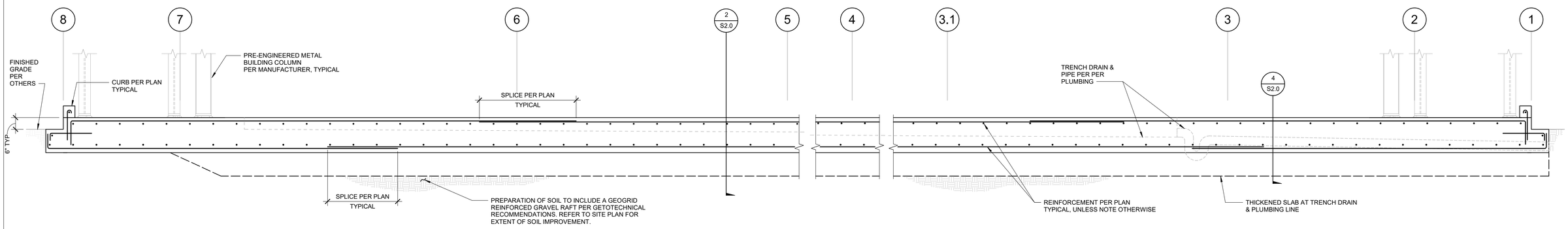

1 APPARATUS BAY MAT FOUNDATION ELEVATION

SCALE : 1/2" = 1'-0"

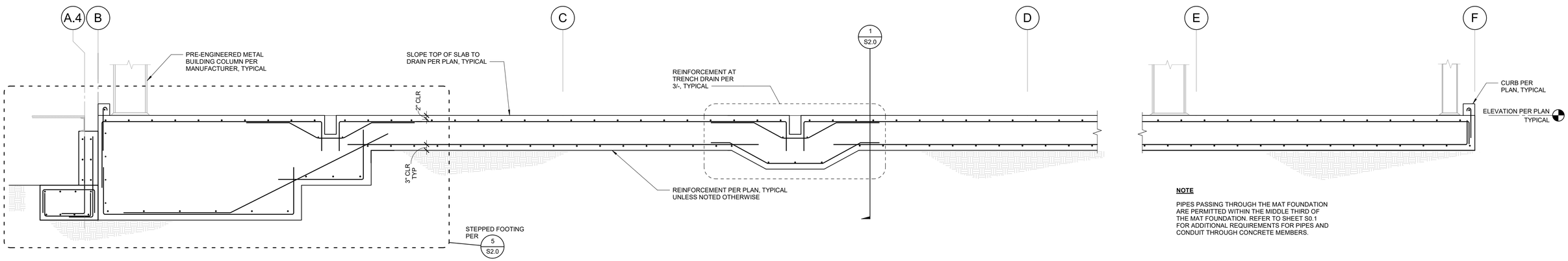

NOTE

PIPES PASSING THROUGH THE MAT FOUNDATION ARE PERMITTED WITHIN THE MIDDLE THIRD OF THE MAT FOUNDATION. REFER TO SHEET S0.1 FOR ADDITIONAL REQUIREMENTS FOR PIPES AND CONDUIT THROUGH CONCRETE MEMBERS.

2 APPARATUS BAY & MODULAR HOUSING ELEVATION

SCALE : 1/2" = 1'-0"

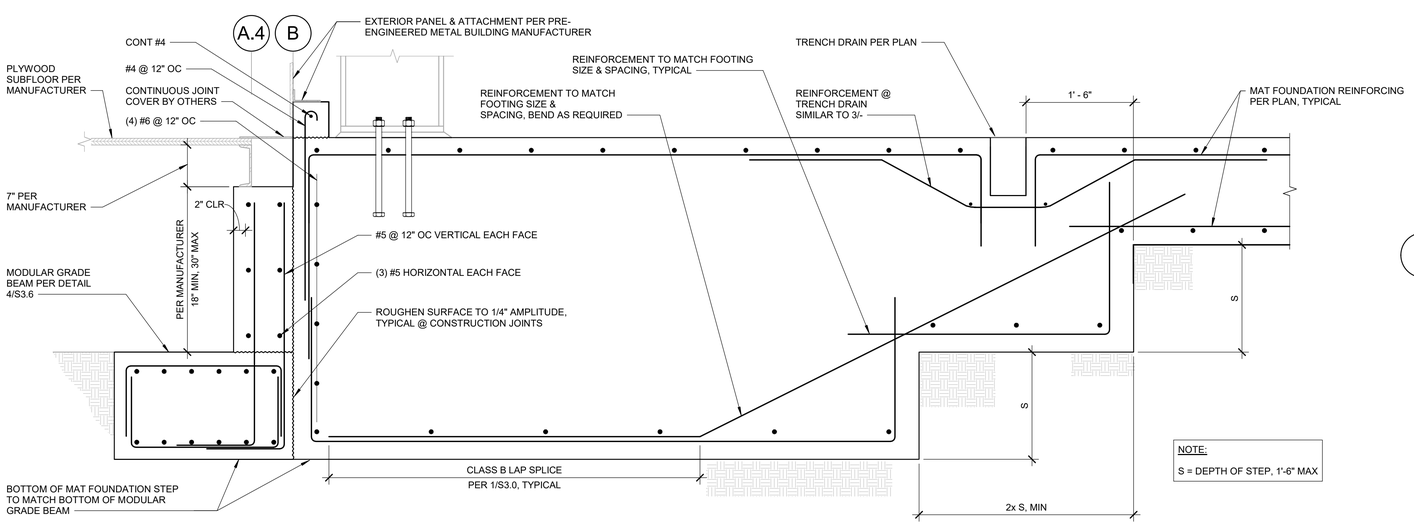

NOTE:

S = DEPTH OF STEP, 1'-6" MAX

5 STEPPED FOOTING DETAIL

SCALE : 1" = 1'-0"

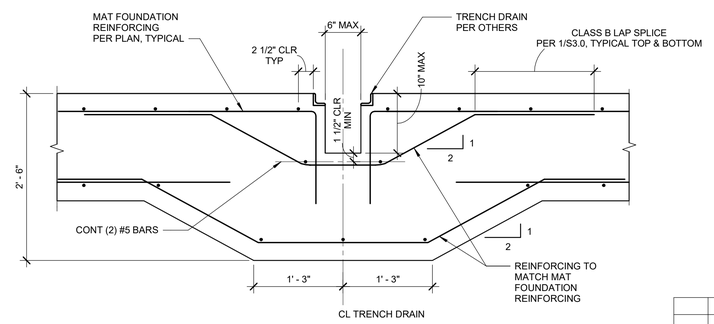

3 TRENCH DRAIN DETAIL

SCALE : 1" = 1'-0"

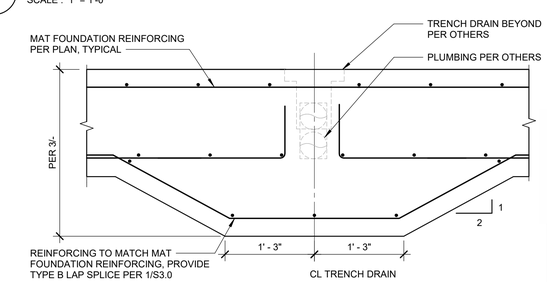

4 THICKENED SLAB AT PLUMBING LINES

SCALE : 1" = 1'-0"

REV.	DESCRIPTION	CK'D	APP	DATE
2	PLAN CHECK 2			2/17/26
1	PLAN CHECK 1			8/11/25

PUBLIC WORKS DEPARTMENT ENGINEERING DIVISION

CITY OF SAN BUENAVENTURA

INTERIM FIRE STATION NO. 7

ELEVATIONS

kpff
700 S. Flower St., Suite 2100
Los Angeles, CA 90017
O: 213.418.0201
www.kpff.com

REGISTERED PROFESSIONAL ENGINEER DAVID A. TOOL No. S6043 STRUCTURAL STATE OF CALIFORNIA

DRN. BY: CC DES. BY: KK CK'D. BY: -

PRINCIPAL ENGINEER — DATE: 5 May 2026

CITY ENGINEER — DATE: 5/7/2026

SPEC. NUMBER 2025-010 PROJECT NO. FA11-1061

SEPTEMBER 7, 2025 SHEET 27 OF 151 DWG. NO. 2025-D-010

2/17/2026 3:17:52 PM
\\prj\pw\projects\2020\30\0007 - City of Ventura Fire Station No. 7 - Apparatus Bay Foundation\6 SRevit\30007_Civil Fire Station 7_R24.rvt

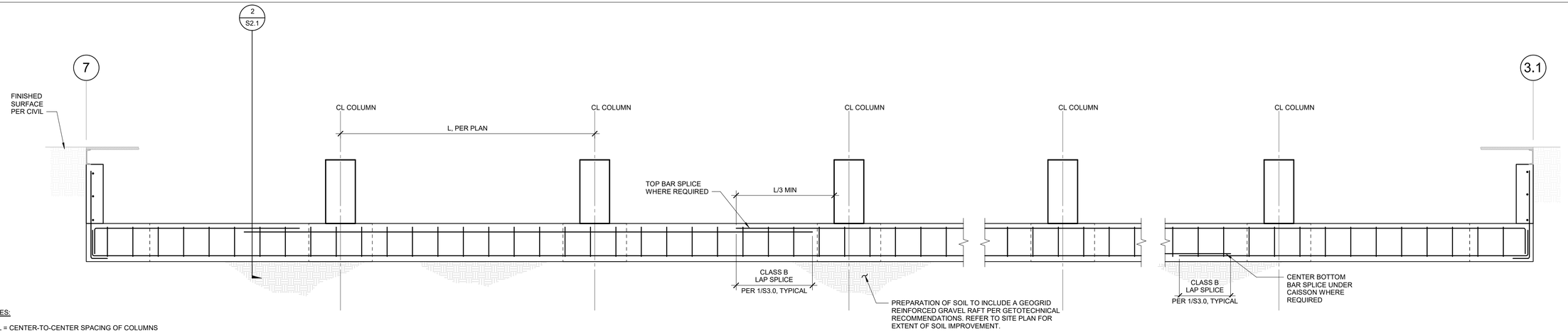

NOTES:

1. L = CENTER-TO-CENTER SPACING OF COLUMNS

1 APPARATUS BAY & MODULAR HOUSING ELEVATION

SCALE : 1/2" = 1'-0"

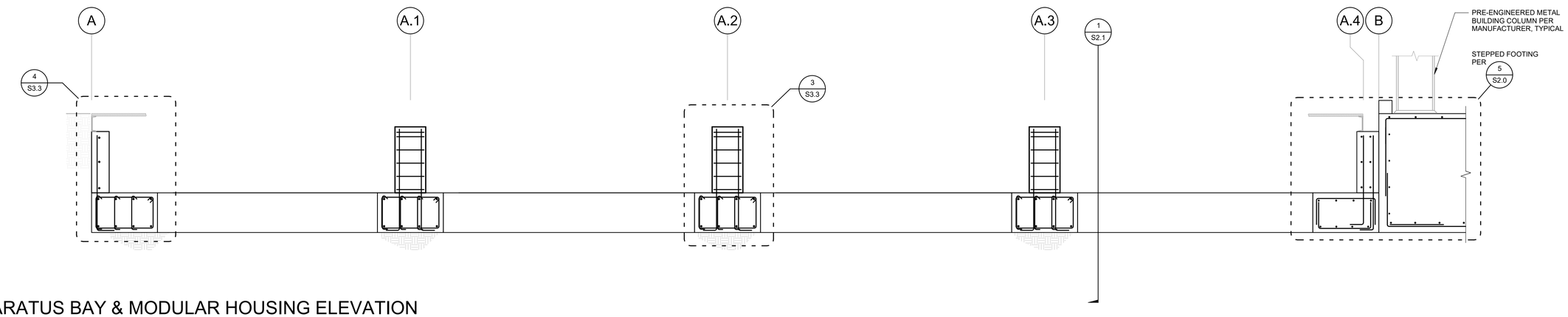

2 APPARATUS BAY & MODULAR HOUSING ELEVATION

SCALE : 1/2" = 1'-0"

REV.	DESCRIPTION	CK'D	APP	DATE
2	PLAN CHECK 2			2/17/26
1	PLAN CHECK 1			8/11/25

kpff
700 S. Flower St., Suite 2100
Los Angeles, CA 90017
O: 213.418.0201
www.kpff.com

PUBLIC WORKS DEPARTMENT ENGINEERING DIVISION

CITY OF SAN BUENAVENTURA

INTERIM FIRE STATION NO. 7

MODULAR ELEVATIONS

DRN. BY: CC DES. BY: KK CK'D. BY: -

REGISTERED PROFESSIONAL ENGINEER DAVID A. TORO No. S6040 STRUCTURAL STATE OF CALIFORNIA

PRINCIPAL ENGINEER — 5 May 2026 DATE

CITY ENGINEER — 5/7/2026 DATE

SPEC. NUMBER 2025-010 PROJECT NO. FA11-1061

SEPTEMBER 7, 2025 SHEET 28 OF 151 DWG. NO. 2025-D-010

2/17/2026 3:17:52 PM
S:\projects\kpff\2025\2025\2025007 - City of Ventura Fire Station No. 7 - Apparatus Bay Foundations\Sheets\2025007_Civil-Fire Station 7.2C3.rvt

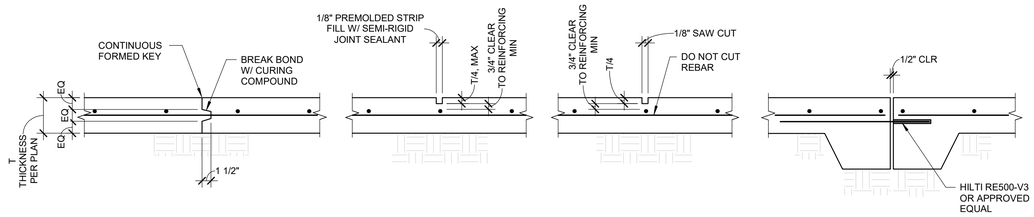

CONSTRUCTION JOINT | FORMED JOINT | SAW-CUT JOINT | EXPANSION/ISOLATION JOINT

CONTROL JOINTS

NOTES:

1. CONTROL JOINTS TO BE LOCATED AT COLUMN CENTER LINES AND AT 15'-0" MAX. AND EVERY 225 SQUARE FEET.
2. IF SAW-CUT CONTROL JOINT TO BE USED, SAW-CUT WITHIN 24 HOURS OF POUR.

4 TYPICAL SLAB ON GRADE JOINTS

SCALE : 1" = 1'-0"

REBAR LAP SPLICE LENGTH SCHEDULE					
BAR SIZE	LAP CLASS	NORMAL WEIGHT CONCRETE			
		f'c = 4000 psi			
		Top Bars		Other Bars	
		Case 1	Case 2	Case 1	Case 2
3	A	1'-7"	2'-4"	1'-3"	1'-10"
	B	2'-1"	3'-1"	1'-7"	2'-4"
4	A	2'-1"	3'-1"	1'-7"	2'-5"
	B	2'-9"	4'-1"	2'-1"	3'-1"
5	A	2'-7"	3'-11"	2'-0"	3'-0"
	B	3'-5"	5'-1"	2'-7"	3'-11"
6	A	3'-1"	4'-8"	2'-5"	3'-7"
	B	4'-1"	6'-1"	3'-1"	4'-8"
7	A	4'-6"	6'-9"	3'-6"	5'-3"
	B	5'-11"	8'-10"	4'-6"	6'-9"
8	A	5'-2"	7'-9"	4'-0"	6'-0"
	B	6'-9"	10'-1"	5'-2"	7'-9"
9	A	5'-10"	8'-9"	4'-6"	6'-9"
	B	7'-7"	11'-4"	5'-10"	8'-9"
10	A	6'-7"	9'-10"	5'-1"	7'-7"
	B	8'-6"	12'-9"	6'-7"	9'-10"
11	A	7'-3"	10'-11"	5'-7"	8'-5"
	B	9'-6"	14'-2"	7'-3"	10'-11"

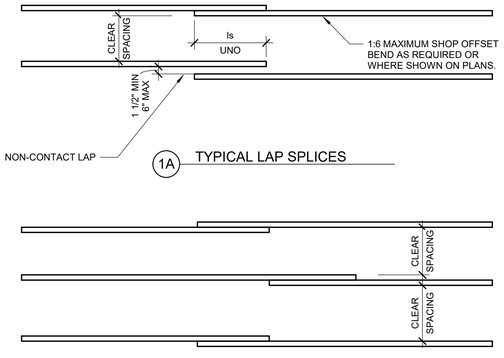

1A TYPICAL LAP SPLICES

1B STAGGERED SPLICING

NOTES:

1. CASES 1 AND 2 WHICH DEPEND ON CLEAR CONCRETE COVER AND THE CENTER-TO-CENTER SPACING OF THE BARS ARE DEFINED AS:
   CASE 1: COVER AT LEAST 1db AND CLEAR SPACING AT LEAST 2db.
   CASE 2: COVER LESS THAN 1db OR CLEAR SPACING LESS THAN 2db.
2. TOP BARS ARE HORIZONTAL BARS WITH MORE THAN 12 INCHES OF CONCRETE CAST BELOW THE BARS.
3. OTHER BARS INCLUDE VERTICAL BARS AND HORIZONTAL BARS WITH LESS THAN 12 INCHES OF CONCRETE CAST BELOW HORIZONTAL BARS.
4. BAR SPLICES NOT COVERED BY THIS SCHEDULE ARE SPECIFICALLY DETAILED AND DIMENSIONED PER PLANS.
5. ALL SPLICES SHALL BE CLASS 'B' UNLESS OTHERWISE ON PLANS.
6. FOR DEVELOPMENT LENGTH, Ld, USE CLASS 'A' LAP SPLICE LENGTH.
7. FOR LAP SPLICES OF BARS IN SHEAR WALLS, REFER TO LAP SPLICE AND DEVELOPMENT SCHEDULE IN CONCRETE WALL ELEVATIONS.
8. THIS SCHEDULE IS FOR GR 60 REINFORCEMENT.
9. CAN USE 1.25 x LAP SPLICE IN LIEU OF NOTE 7 AT SHEAR WALLS.
10. FOR STAGGERED SPLICES, CLEAR SPACING SHOWN IN DIAGRAM MAY BE USED TO DETERMINE CASE 1 OR CASE 2 PER NOTE 1

1 DEVELOPMENT AND LAP SPLICE OF CONCRETE REINFORCEMENT BARS- NW CONCRETE

SCALE : 12" = 1'-0"

TYPE OF STANDARD HOOK	BAR SIZE	MINIMUM INSIDE BEND DIAMETER, IN	STRAIGHT EXTENSION [1] ℓ_{EXT}, IN	TYPE OF STANDARD HOOK
90-DEGREE HOOK	#3 THROUGH #8	$6d_b$	$12d_b$	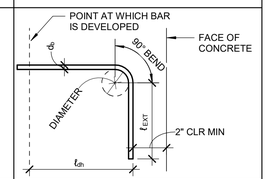
	#9 THROUGH #11	$8d_b$		
	#14 THROUGH #18	$10d_b$		
180-DEGREE HOOK	#3 THROUGH #8	$6d_b$	GREATER OF $4d_b$ AND 2.5 IN	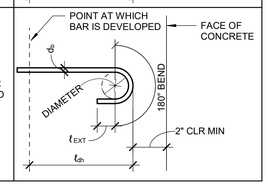
	#9 THROUGH #11	$8d_b$		
	#14 THROUGH #18	$10d_b$		

STANDARD HOOK DEVELOPMENT LENGTH "l_{dh}"			
			NORMAL WEIGHT
BAR SIZE	D	"l_h"	4000
#3	2 1/4"	5"	0'-8"
#4	3"	8"	0'-10"
#5	3 3/4"	10	1'-0"
#6	4 1/2"	12	1'-3"
#7	5 1/4"	1'-2"	1'-5"
#8	6"	1'-4"	1'-7"
#9	9 1/2"	1'-7 1/2"	1'-10"
#10	10 3/4"	1'-10"	2'-1"
#11	12"	2'-0 1/2"	2'-3"

NOTES:

1. ACI 318-14 TABLE 25.3.2.
2. ALL HOOKED BARS SHALL EXTEND AS FAR AS POSSIBLE WITH A MINIMUM 2" END COVER AND WITH EMBEDMENT NOT LESS THAN SHOWN ON THE SCHEDULE. UNO ON PLANS.

2 STANDARD HOOK DEVELOPMENT LENGTH BENDING DETAIL

SCALE : 1" = 1'-0"

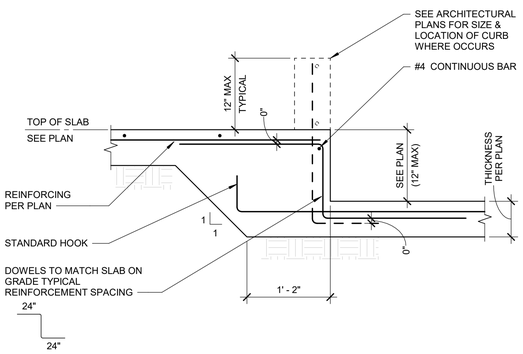

5A STEP IN SLAB ON GRADE (12" MAX)

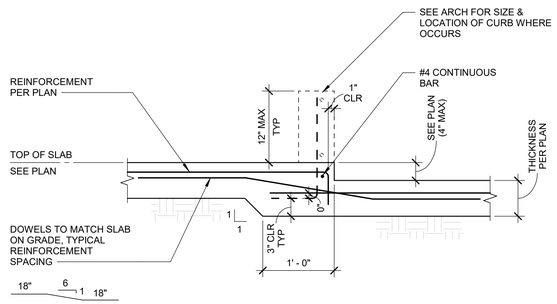

5B STEP IN SLAB ON GRADE (4" MAX)

5 SLAB ON GRADE DEPRESSIONS

SCALE : 1" = 1'-0"

NOTES:

1. SEE GENERAL NOTES FOR EPOXY.
2. USE NON-DESTRUCTIVE METHODS TO LOCATE EXISTING REINFORCING BARS. DO NOT CUT EXISTING REINFORCING BARS WHICH MAY CONFLICT WITH ANCHOR LOCATION.

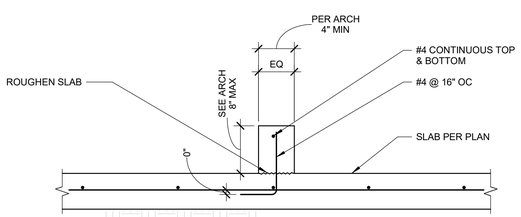

6A CURB AT SLAB ON GRADE

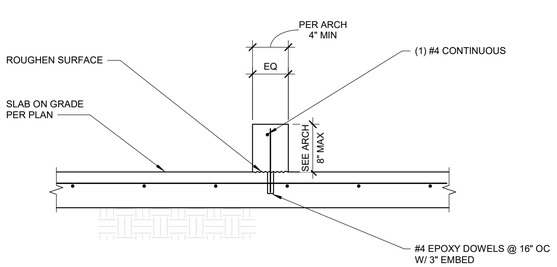

6B EPOXY DOWELED CONCRETE CURB

6 TYPICAL CURB DETAILS

SCALE : 1" = 1'-0"

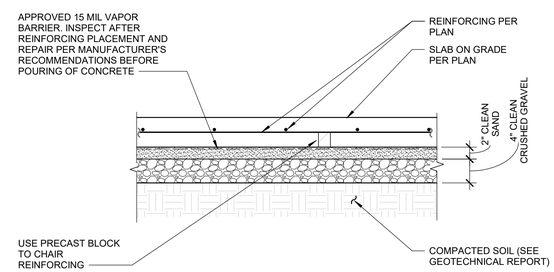

NOTES:

1. REFER TO GEOTECHNICAL REPORT FOR ADDITIONAL REQUIREMENTS.
2. CONTRACTOR SHALL TAKE CARE NOT TO PUNCTURE VAPOR RETARDER DURING CONSTRUCTION OF SLAB ON GRADE.
3. PROVIDE VAPOR RETARDER AT AREAS AND WITH EXTENTS/TERMINATIONS AS SPECIFIED BY ARCHITECT.
4. VAPOR RETARDER AND/OR GRAVEL LAYER MAY BE OMITTED AT PARKING/DRIVE ISLE AREAS. GEOTECHNICAL ENGINEER SHALL CONFIRM BASED ON FIELD TESTING OF IN-SITU SOILS.

3 TYPICAL VAPOR BARRIER DETAIL

SCALE : 1" = 1'-0"

REV.	DESCRIPTION	CK'D	APP	DATE
2	PLAN CHECK 2			2/17/26
1	PLAN CHECK 1			8/11/25

kpff
700 S. Flower St., Suite 2100
Los Angeles, CA 90017
O: 213.418.0201
www.kpff.com

PUBLIC WORKS DEPARTMENT ENGINEERING DIVISION
CITY OF SAN BUENAVENTURA

INTERIM FIRE STATION NO. 7

TYPICAL CONCRETE DETAILS

DRN. BY: CC DES. BY: KK CK'D. BY: -

PRINCIPAL ENGINEER — DATE: 5 May 2026

CITY ENGINEER — DATE: 5/7/2026

REGISTERED PROFESSIONAL ENGINEER DAVID A. TOM No. S6043 STRUCTURAL STATE OF CALIFORNIA

SPEC. NUMBER 2025-010 PROJECT NO. FA11-1061

SEPTEMBER 7, 2025 SHEET 29 OF 151 DWG. NO. 2025-D-010

2/17/2026 3:17:53 PM
S:\Projects\Projects\2024\240587 - City of Ventura Fire Station No. 7 - Appendix Bay Foundations\Revit\240587_Civil Fire Station 7_R24.rvt

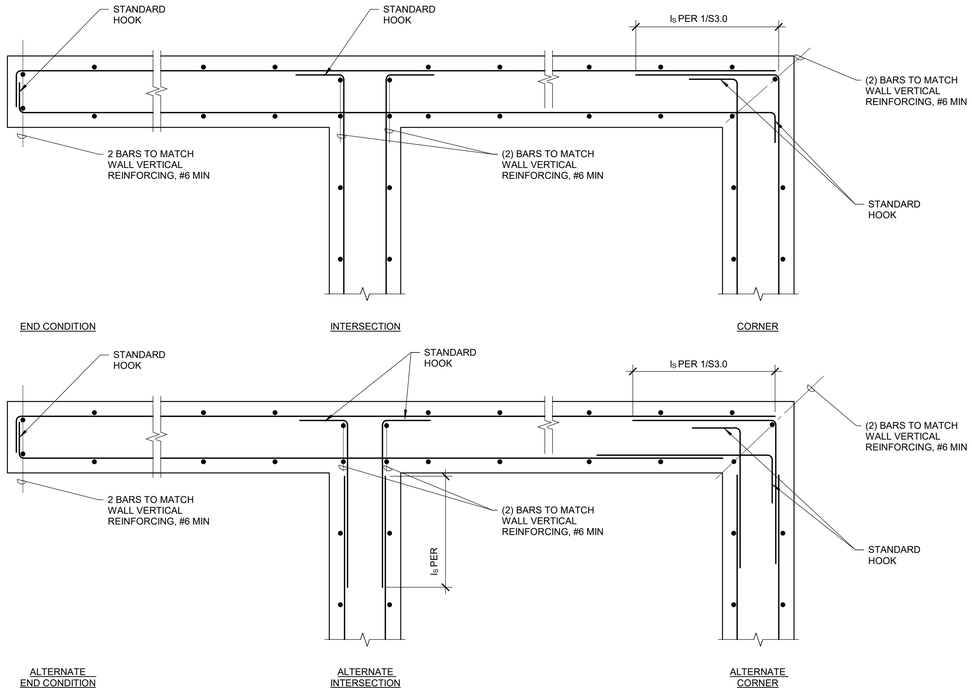

DOUBLE LAYER REINFORCING

NOTE:

REINFORCEMENT SHOWN ON WALL ELEVATIONS AND OTHER SPECIFICALLY REFERENCED DETAILS TAKE PRECEDENCE OVER REINFORCEMENT SHOWN HERE.

4 PLAN - CONCRETE WALL & FOOTING DETAIL

SCALE : 1" = 1'-0"

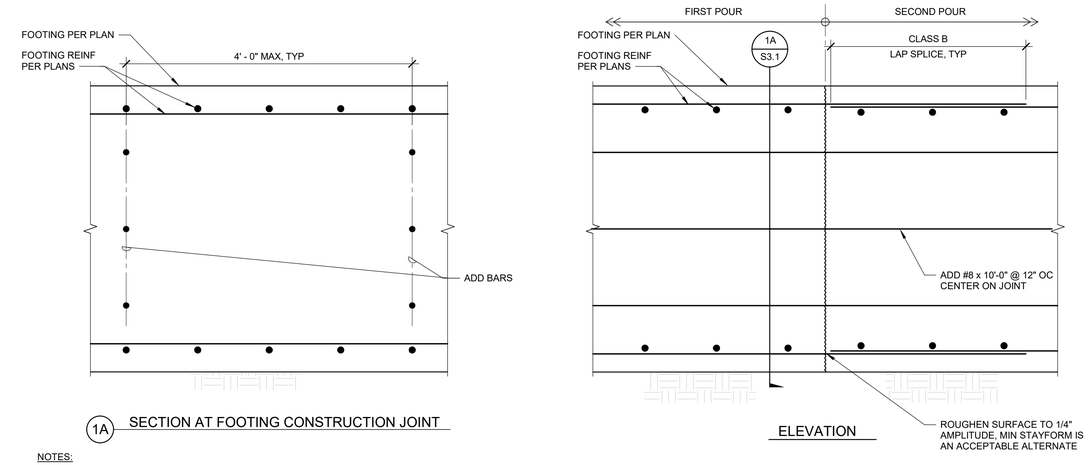

NOTES:

1. LOCATE CONSTRUCTION JOINT IN MIDDLE 1/3 OF THE DISTANCE BETWEEN COLUMNS.
2. CONTRACTOR TO SUBMIT LOCATIONS OF CONSTRUCTION JOINTS TO SEOR FOR APPROVAL.

1 CONSTRUCTION JOINT AT MAT FOUNDATION

SCALE : 1" = 1'-0"

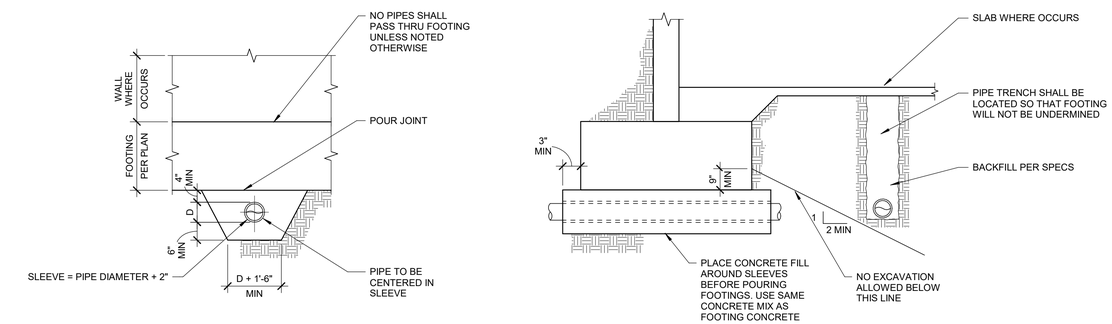

2 PIPE TRENCH BELOW & ADJACENT TO FOOTING DETAIL

SCALE : 1" = 1'-0"

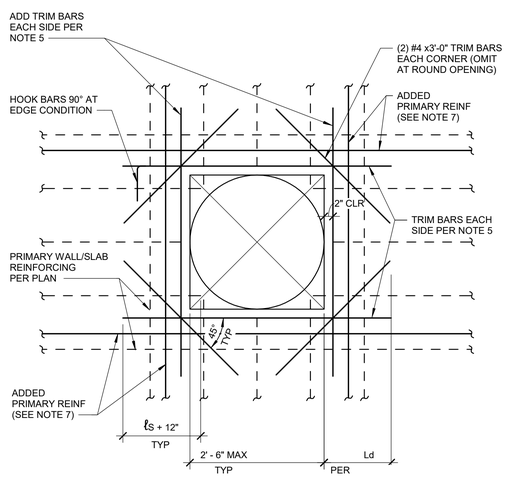

NOTES:

1. THIS DETAIL INDICATES MINIMUM REINFORCING FOR OPENING NOT DETAILED ELSEWHERE IN THESE DRAWINGS.
2. CLUSTERS OF SMALL HOLES WHOSE OVERALL MEASUREMENT EXCEEDS 1'-0" SHOULD BE REINFORCED AS ONE OPENING.
3. NO OPENING IN SLAB TO BE LOCATED CLOSER THAN 2'-0" CLEAR FROM COLUMN FACE UNLESS APPROVED BY THE STRUCTURAL ENGINEER OF RECORD.
4. TRIM BARS AT EACH SIDE OF OPENING TO MATCH SIZE AND QUANTITY OF PRIMARY REINFORCEMENT BARS INTERRUPTED DUE TO OPENING, MIN (2) #5 EACH SIDE (EACH FACE FOR WALLS, TOP & BOTTOM FOR SLABS).
5. ANY OPENINGS NOT SHOWN ON THE STRUCTURAL DRAWINGS SHALL BE BROUGHT TO THE STRUCTURAL ENGINEER OF RECORD'S ATTENTION BY THE CONTRACTOR PRIOR TO PERFORMING WORK.
6. ADD REINFORCING EQUAL TO INTERRUPTED REINFORCING ON EACH SIDE OF OPENING, TYPICAL. SPACE ADDED BARS AT 3" ON CENTER.

6 CONC WALL/SLAB OPENING DETAIL

SCALE : 3/4" = 1'-0"

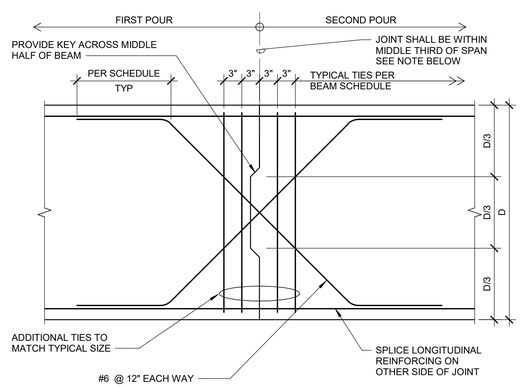

NOTE:

CONTRACTOR TO SUBMIT LOCATIONS OF CONSTRUCTION JOINTS TO THE STRUCTURAL ENGINEER FOR APPROVAL.

5 CONC BEAM CONSTRUCTION JOINT

SCALE : 1" = 1'-0"

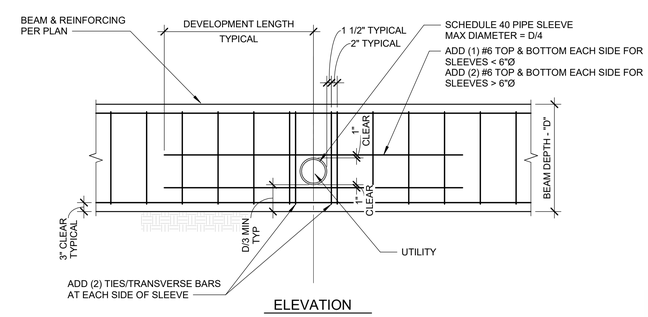

NOTES:

1. SEE PLANS FOR SIZE & LOCATION OF SLEEVES.
2. PENETRATIONS NOT SHOWN ON THE DOCUMENTS MUST BE APPROVED BY THE STRUCTURAL ENGINEER OF RECORD.
3. PIPE SLEEVE MUST PROVIDE 1" CLEAR MIN AROUND UTILITY LINE.
4. WHERE SLEEVE IS OUTSIDE D/3 ALERT STRUCTURAL ENGINEER OF RECORD.

3 GRADE BEAM PENETRATION DETAIL

SCALE : 1/2" = 1'-0"

kpff
700 S. Flower St., Suite 2100
Los Angeles, CA 90017
O: 213.418.0201
www.kpff.com

REV.	DESCRIPTION	CK'D	APP	DATE
2	PLAN CHECK 2			2/17/26
1	PLAN CHECK 1			8/11/25

PUBLIC WORKS DEPARTMENT ENGINEERING DIVISION

CITY OF SAN BUENAVENTURA

INTERIM FIRE STATION NO. 7

TYPICAL CONCRETE DETAILS

DRN. BY: CC DES. BY: KK CK'D. BY: -

PRINCIPAL ENGINEER — DATE: 5 May 2026

CITY ENGINEER — DATE: 5/7/2026

REGISTERED PROFESSIONAL ENGINEER DAVID A. TORO No. S6043 STRUCTURAL STATE OF CALIFORNIA

SPEC. NUMBER 2025-010 PROJECT NO. FA11-1061

SEPTEMBER 7, 2025 SHEET 30 OF 151 DWG. NO. 2025-D-010

2/17/2026 3:17:53 PM
G:\grp\public\projects\2025\2025007 - City of Ventura Fire Station No. 7 - Appendix Buy Foundations\ SBfire\S2400007_CivilFire Station 7.R24.rvt

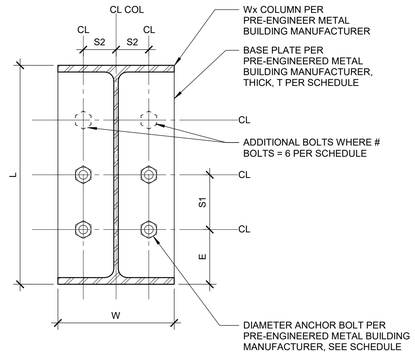

1D TYPICAL BASE PLATE PLAN
3" = 1'-0"

BASE PLATE SCHEDULE

1

	L	W	E	S1	S2	S3	S4	ANCHOR BOLTS
C1	8"	5"	2"	4"	1 1/2"	10"	N/A	(4) 5/8" Ø HEX HEAD GR 36
C2	17"	10"	3"	5 1/2"	2 3/4"	11"	N/A	(6) 1 3/8" Ø HEAVY HEX HEAD GR 105
C3	16"	10"	3"	5 1/2"	2 3/4"	11"	N/A	(6) 1 1/4" Ø HEAVY HEX HEAD GR 105
C4	17"	10"	3"	5 1/2"	2 3/4"	11"	9 1/4"	(6) 1 1/4" Ø HEAVY HEX HEAD GR 105
C5	18"	11"	3"	6"	3"	11"	N/A	(6) 1 1/2" Ø HEAVY HEX HEAD GR105
C6	9 7/8"	6"	3"	4"	2"	11"	9"	(4) 3/4" Ø HEX HEAD GR 55
C7	9 7/8"	6"	3"	4"	2"	11"	N/A	(4) 3/4" Ø HEX HEAD GR 55
C8	8"	6"	2"	4"	2"	10"	10"	(4) 3/4" Ø HEX HEAD GR 36
C9	10 3/16"	6"	3"	4"	2"	11"	10"	(4) 3/4" Ø HEX HEAD GR 36
C10	9 7/8"	9"	3"	4 1/2"	2 1/4"	11"	N/A	(4) 1 1/8" Ø HEX HEAD GR 105

NOTES:

1. FOUNDATION DESIGN ASSUMPTIONS BASED ON TOP COLUMN BEING BRACED AT THE ROOF.
2. SEE NOTE #7 ON PLAN NOTES.
3. ANCHOR REINFORCING CONSISTS OF BOTH HAIRPINS & TENSION ANCHOR REINFORCEMENT.
4. REFER TO PRE-ENGINEERED METAL BUILDING DRAWINGS FOR BASE PLATE ORIENTATION.
5. ALL ANCHOR BOLTS SHALL BE ASTM F 1554, GALVANIZED.

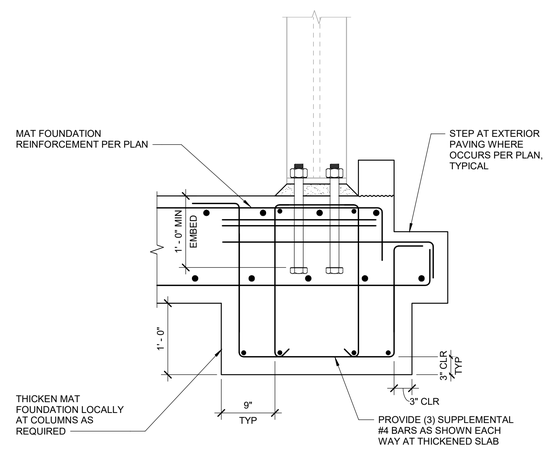

1C SECTION

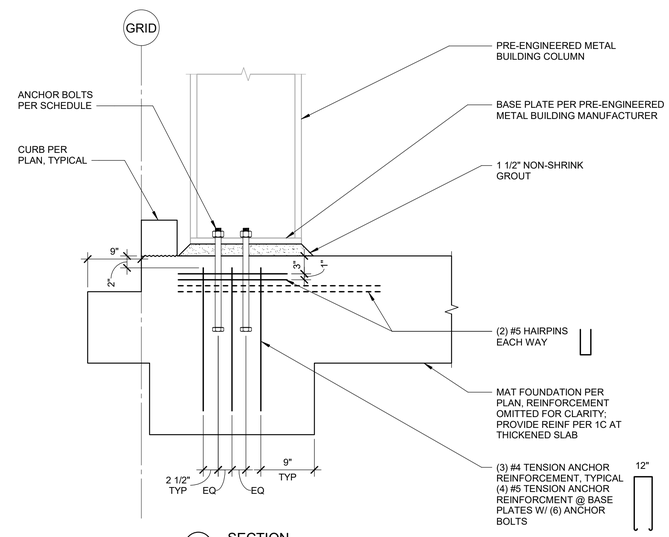

1B SECTION

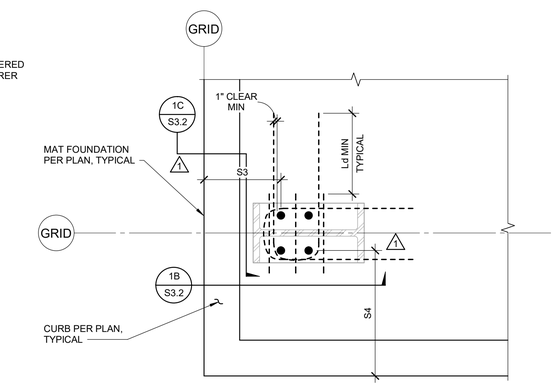

1A PLAN VIEW

1 BASE PLATE DETAIL

REV.	DESCRIPTION	CK'D	APP	DATE
2	PLAN CHECK 2			2/17/26
1	PLAN CHECK 1			8/11/25

PUBLIC WORKS DEPARTMENT ENGINEERING DIVISION
CITY OF SAN BUENAVENTURA

INTERIM FIRE STATION NO. 7

PEMB ANCHORAGE DETAILS

kpff
700 S. Flower St., Suite 2100
Los Angeles, CA 90017
O: 213.418.0201
www.kpff.com

DRN. BY: Author DES. BY: Designer CK'D. BY: Checker

PRINCIPAL ENGINEER 5 May 2026 DATE

CITY ENGINEER 5/7/2026 DATE

REGISTERED PROFESSIONAL ENGINEER DAVID A. TORO No. S6043 STRUCTURAL STATE OF CALIFORNIA

SPEC. NUMBER 2025-010 PROJECT NO. FA11-1061

SEPTEMBER 7, 2025 SHEET 31 OF 151 DWG. NO. 2025-D-010

2/17/2026 3:17:53 PM
G:\projects\wbg-projects\2024\2400507 - City of Ventura Fire Station No. 7 - Aspinwalls Bay Foundations\Sheets\2400507_CivilFire Station 7_R24.rvt

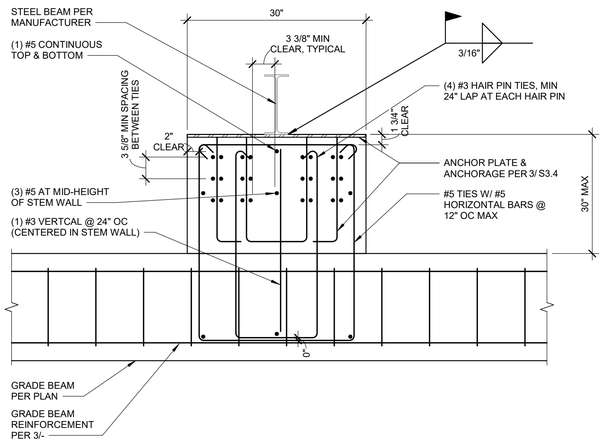

5 INTERIOR SECTION AT MODLINE

SCALE : 1" = 1'-0"

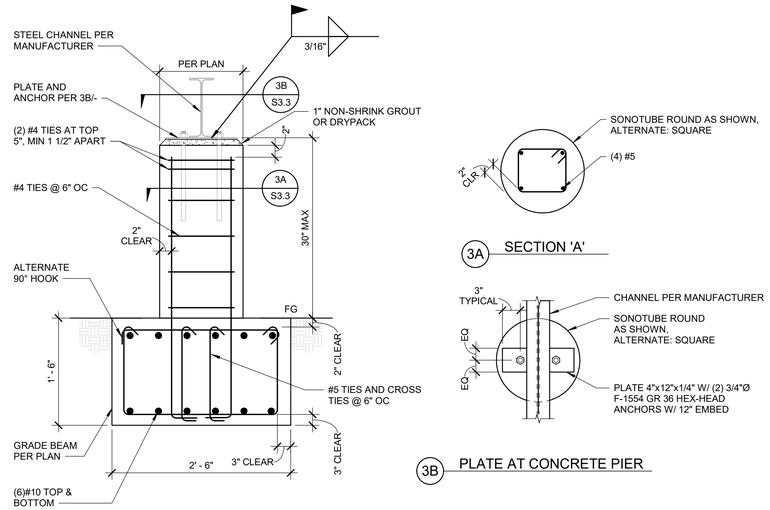

3 INTERIOR SECTION AT MODLINE

SCALE : 1" = 1'-0"

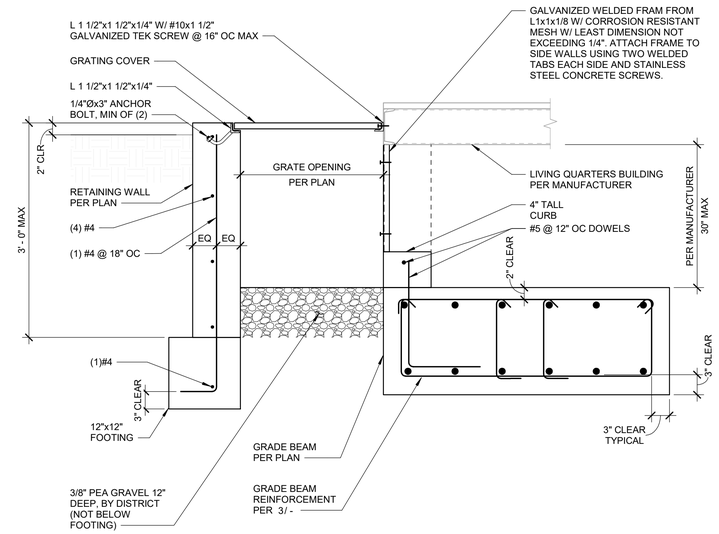

1 DETAIL

SCALE : 1" = 1'-0"

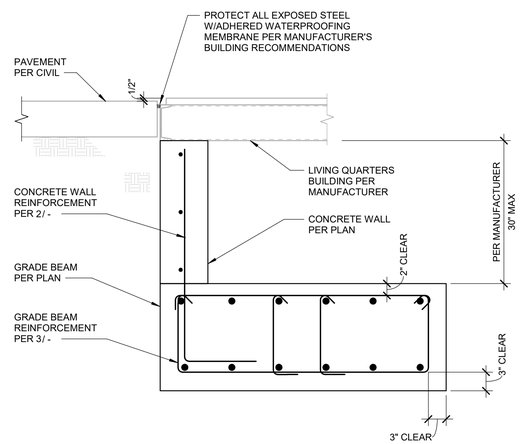

4 DETAIL

SCALE : 1" = 1'-0"

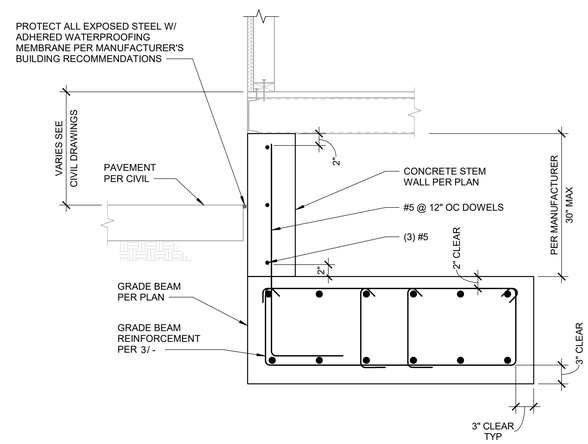

2 DETAIL

SCALE : 1" = 1'-0"

REV.	DESCRIPTION	CK'D	APP	DATE
2	PLAN CHECK 2			2/17/26
1	PLAN CHECK 1			8/11/25

PUBLIC WORKS DEPARTMENT ENGINEERING DIVISION

CITY OF SAN BUENAVENTURA

INTERIM FIRE STATION NO. 7

MODULAR DETAILS

kpff
700 S. Flower St., Suite 2100
Los Angeles, CA 90017
O: 213.418.0201
www.kpff.com

REGISTERED PROFESSIONAL ENGINEER DAVID A. TORO No. 5656 STRUCTURAL STATE OF CALIFORNIA

DRN. BY: Author DES. BY: Designer CK'D. BY: Checker

PRINCIPAL ENGINEER 5 May 2026 DATE

CITY ENGINEER 5/7/2026 DATE

SPEC. NUMBER 2025-010 PROJECT NO. FA11-1061

SEPTEMBER 7, 2025 SHEET 32 OF 151 DWG. NO. 2025-D-010

2/17/2026 3:17:54 PM
S:\Projects\Projects\2025\2025-0007 - City of Ventura Fire Station No. 7 - Aqueduct Bay Foundation\8.5\Revit\2025\07_Civil Fire Station 7_R24.rvt

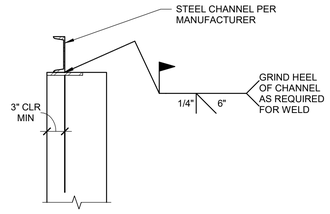

5A ANCHOR PLATE CONNECTION

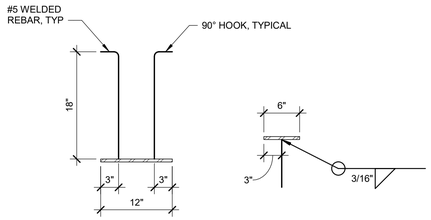

5B ANCHOR PLATE ELEVATIONS

5 ANCHOR PLATE AT GRID A.4 DETAIL

SCALE : 1" = 1'-0"

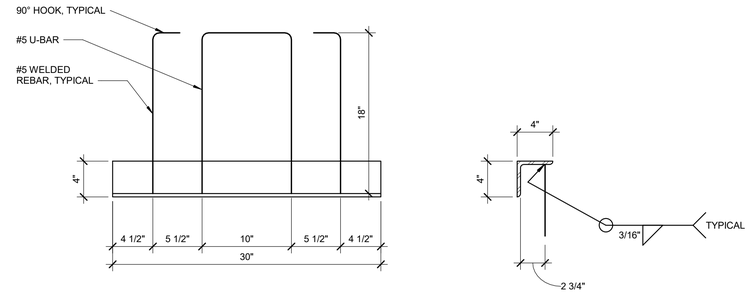

3 ANCHOR PLATE AT MODLINE DETAIL

SCALE : 1 1/2" = 1'-0"

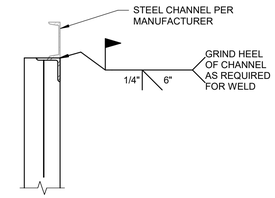

1A ANCHOR PLATE CONNECTION

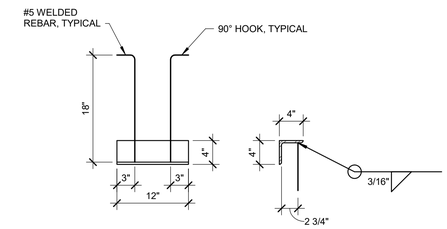

1B ANCHOR PLATE ELEVATIONS

1 ANCHOR PLATE DETAIL

SCALE : 1" = 1'-0"

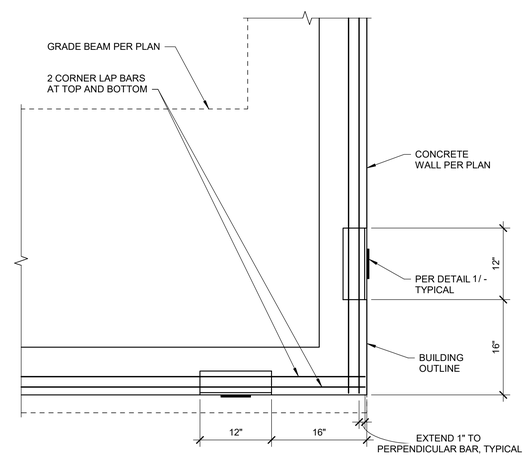

4 ANCHOR PLATE AT CORNER DETAIL

SCALE : 1" = 1'-0"

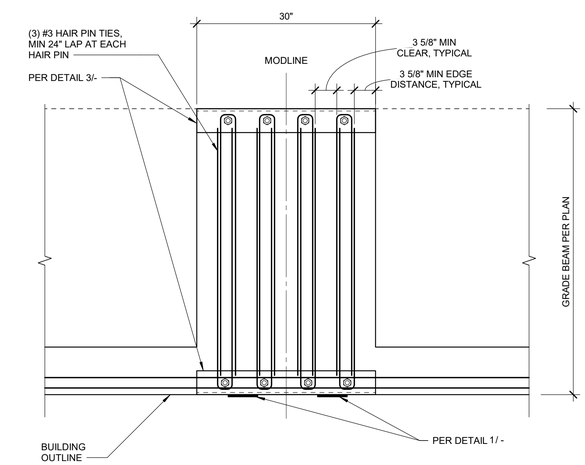

2 ANCHOR PLATE AT MODLINE DETAIL

SCALE : 1" = 1'-0"

REV.	DESCRIPTION	CK'D	APP	DATE
2	PLAN CHECK 2			2/17/26
1	PLAN CHECK 1			8/11/25

PUBLIC WORKS DEPARTMENT ENGINEERING DIVISION

CITY OF SAN BUENAVENTURA

INTERIM FIRE STATION NO. 7

MODULAR DETAILS

kpff
700 S. Flower St., Suite 2100
Los Angeles, CA 90017
O: 213.418.0201
www.kpff.com

DRN. BY: Author DES. BY: Designer CK'D. BY: Checker

PRINCIPAL ENGINEER 5 May 2026 DATE

CITY ENGINEER 5/7/2026 DATE

SPEC. NUMBER 2025-010 PROJECT NO. FA11-1061

SEPTEMBER 7, 2025 SHEET 33 OF 151 DWG. NO. 2025-D-010

2/17/2026 3:17:54 PM
S:\Projects\Projects\2025\2025001 - City of Ventura Fire Station No. 7 - Apparatus Bay Foundation\05 Structural\001 CD\Civil Fire Station 7_R24.rvt

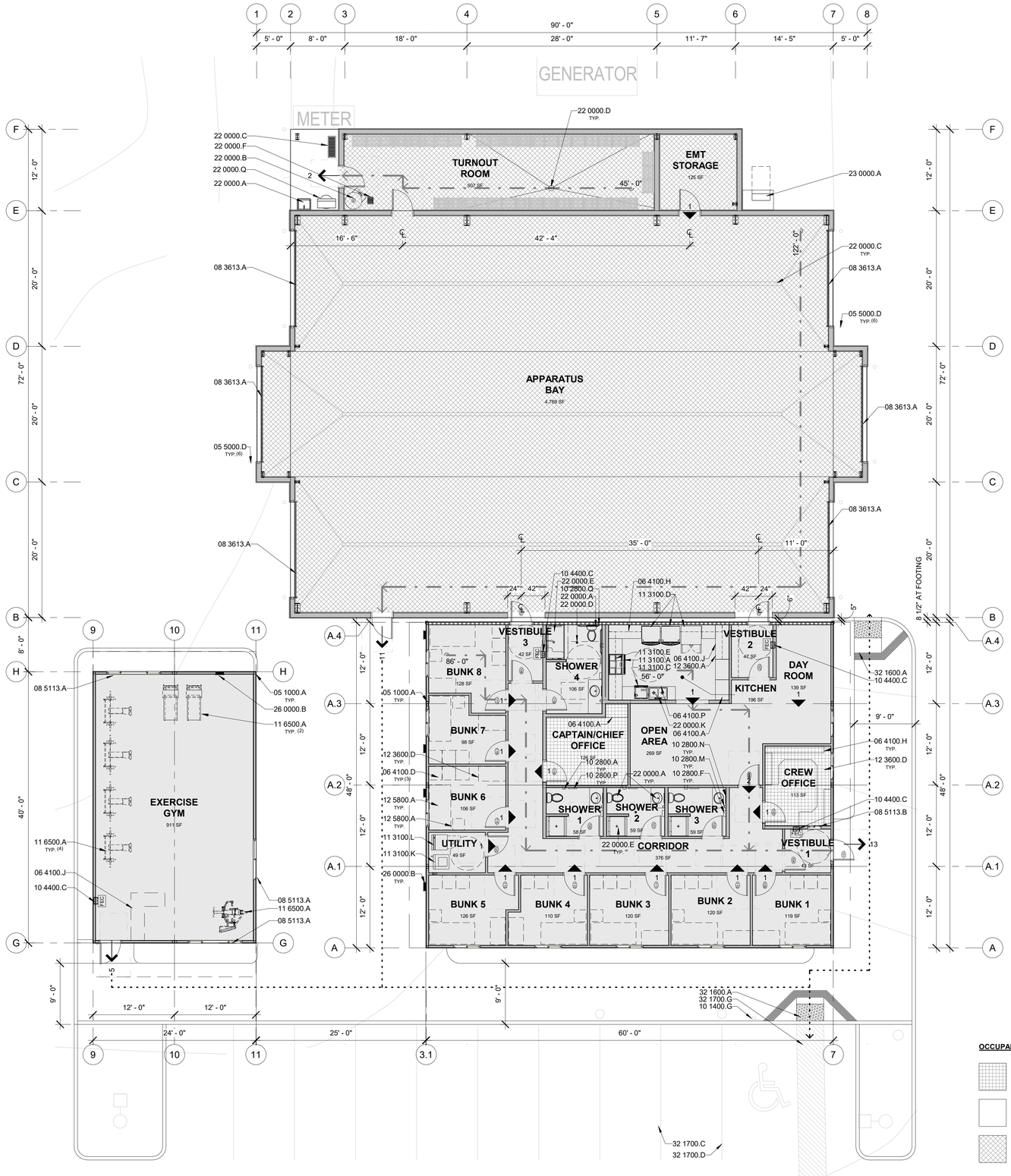

OCCUPANCY GROUP LEGEND

- B
- R-2
- S-2

1 GROUND FLOOR PLAN

A-101 SCALE: 1/8" = 1'-0"

LEGEND

WALL SEPARATION SYMBOLS:

1-HOUR RATED FIRE PARTITION W/ MIN. STC 50
(PROTECTION CONTINUOUS TO RATED CEILING ABOVE)

OCCUPANT LOADS AND EGRESS:

ACCESSIBLE PATH OF TRAVEL
(SHALL BE 48" MIN. WIDE PER CBC 11B-403.5)

COMMON PATH OF EGREES TRAVEL (CPET)
WITH MAXIMUM TRAVEL DISTANCE FROM REMOTE POINT
125' MAX. DISTANCE PER ***2025 CBC TABLE 1006.2.1*** [R-2 OCCUPANCIES]
75' MAX. DISTANCE PER ***2025 CBC TABLE 1006.3.4(2)*** [OCCUPANCIES OTHER THAN R-2 AND R-3]

1 — NUMBER OF OCCUPANTS EXITING SPACE PER CODE PLAN SHEET PAGE 20

20 — OCCUPANT LOAD AT EXIT PER CODE PLAN SHEET PAGE 20

FIRE PROTECTION FEATURES:

FEC — FIRE EXTINGUISHER & RECESSED CABINET
2A-10B-C RATING

KEYNOTES

05 1000.A	STEEL COLUMN REFER TO STRUCTURAL
05 5000.D	CONCRETE FILLED METAL BOLLARD
06 4100.A	FULL HT. CABINETS W/ ADJUSTABLE SHELVING & DOORS
06 4100.D	WARDROBE LOCKERS W/CLOTHES ROD, SHELF, DRAWERS & LOCKABLE DOORS
06 4100.H	UPPER CABINETS W/DOORS & ADJUSTABLE SHELVING
06 4100.J	BASE CABINETS W/ DRAWERS, DOORS & ADJUSTABLE SHELVING
06 4100.P	ACCESSIBLE SINK BASE CABINET
08 3613.A	SECTIONAL DOOR
08 5113.A	ALUMINUM WINDOW. REFER TO WINDOW SCHEDULE
08 5113.B	ALUM. WINDOW W/SLIDING TRANSACTION WINDOW
10 1400.G	ACCESSIBLE PARKING SIGNAGE
10 2800.A	SEMI-RECESSED TOILET PAPER DISPENSER
10 2800.F	SURFACE MOUNTED PAPER TOWEL DISPENSER
10 2800.M	SOAP DISPENSER
10 2800.N	MIRROR
10 2800.P	SEAT COVER DISPENSER
10 2800.Q	GRAB BAR
10 4400.C	SEMI-RECESSED FIRE EXTINGUISHER CABINET WITH EXTINGUISHER
11 3100.A	OVEN / RANGE
11 3100.C	DISHWASHER
11 3100.D	REFRIGERATOR
11 3100.E	VENT HOOD, REFER TO MECHANICAL
11 3100.K	WASHER
11 3100.L	DRYER
11 6500.A	ATHLETIC EQUIPMENT, OFOI.
12 3600.A	STAINLESS STEEL COUNTERTOP WITH MARINE EDGE
12 3600.D	PLASTIC LAMINATE COUNTERTOP & BACKSPLASH
12 5800.A	FURNITURE, OFOI.
22 0000.A	PLUMBING FIXTURE. REFER TO PLUMBING
22 0000.B	WATER HEATER. REFER TO PLUMBING
22 0000.C	TRENCH DRAIN SYSTEM. REFER TO PLUMBING
22 0000.D	FLOOR DRAIN. REFER TO PLUMBING
22 0000.E	SHOWER PAN. REFER TO PLUMBING
22 0000.F	FLOOR SINK. REFER TO PLUMBING
22 0000.K	KITCHEN SINK. REFER TO PLUMBING
22 0000.Q	AIR COMPRESSOR. REFER TO PLUMBING.
23 0000.A	MECHANICAL EQUIPMENT. REFER TO MECHANICAL
26 0000.B	ELECTRICAL PANEL. REFER TO ELECTRICAL
32 1600.A	ACCESSIBLE CURB RAMP. REFER TO CIVIL
32 1700.C	PARKING SPACE STRIPING. REFER TO CIVIL
32 1700.D	ACCESSIBLE PARKING SPACE STRIPING. REFER TO CIVIL
32 1700.G	ACCESSIBLE WALKWAY STRIPING. REFER TO CIVIL

WALL TYPES

8" METAL GIRT WALL WITH EXTERIOR METAL WALL PANELS PER STEEL BUILDING MANUFACTURER.

WOOD STUD WALL PER MODULAR MANUFACTURER.

1-HOUR WOOD STUD WALL PER MODULAR MANUFACTURER.

PUBLIC WORKS DEPARTMENT ENGINEERING DIVISION
CITY OF SAN BUENAVENTURA

PRINCIPAL ENGINEER — DATE: 5 May 2026

CITY ENGINEER — DATE: 5/7/2026

rrm design group
rrmdesign.com | (805) 543-1794

THE INCLUDED DRAWINGS, SPECIFICATIONS, IDEAS, DESIGNS AND ARRANGEMENTS REPRESENTED THEREBY ARE AND SHALL REMAIN THE PROPERTY OF RRM DESIGN GROUP AND NO PART THEREOF SHALL BE COPIED, DISCLOSED TO OTHERS OR USED IN CONNECTION WITH ANY WORK OR PROJECT OTHER THAN THE SPECIFIED PROJECT FOR WHICH THEY HAVE BEEN PREPARED AND DEVELOPED WITHOUT THE WRITTEN CONSENT OF RRM DESIGN GROUP. VISUAL CONTACT WITH THESE DRAWINGS OR SPECIFICATIONS SHALL CONSTITUTE CONCLUSIVE EVIDENCE OF ACCEPTANCE OF THESE RESTRICTIONS. SUBMITTAL OF PROPOSALS, SHOP DRAWINGS, REVISIONS, ETC. SHALL ALSO BE CONSIDERED AS A WAIVER OF RRM DESIGN GROUP'S RIGHTS.
RRM DESIGN GROUP COPYRIGHT 2025
RRM IS A CALIFORNIA CORPORATION

NOT FOR CONSTRUCTION

CONSULTANT

AGENCY

VENTURA INTERIM FIRE STATION
2269 ALESSANDRO DR. VENTURA, CA 93001

COMPOSITE FLOOR PLAN

NO.	REVISION	DATE

PROJECT MANAGER MS
DRAWN BY DP
CHECKED BY KH
DATE 04.10.2026
PROJECT NUMBER FA11-1061
SHEET

CONSTRUCTION DOCUMENTS

4/10/2026 5:07:41 PM
Autodesk Docs://3152-01_Ventura Interim FS Plan Review/3152-01_Ventura Interim FS.rvt

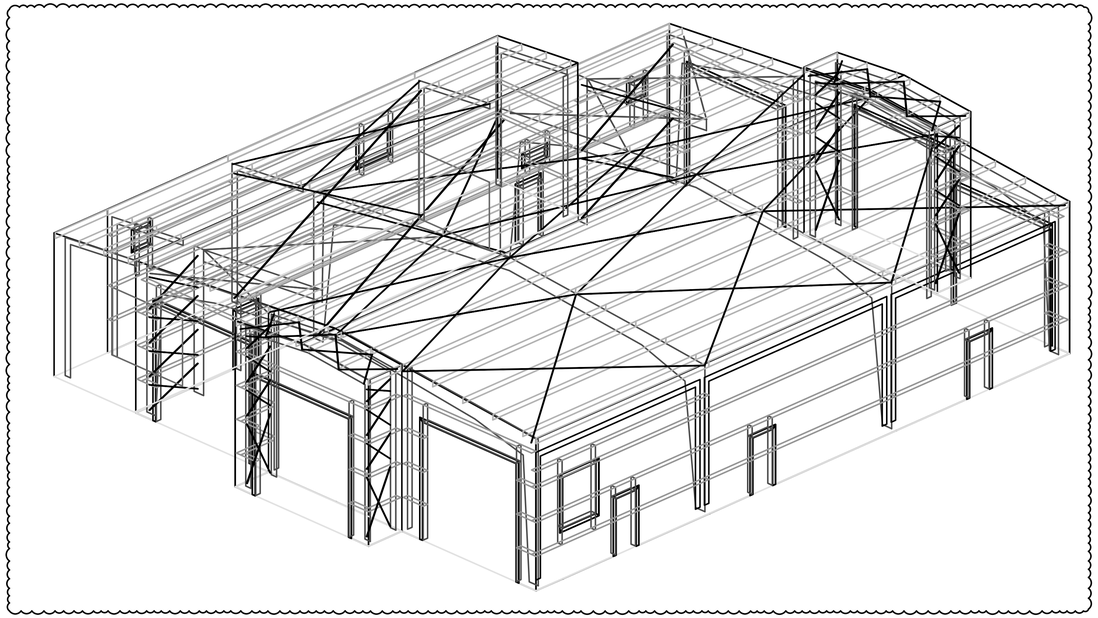

4

GENERAL NOTES:

1) ALL STRUCTURAL STEEL SECTIONS AND WELDED PLATE MEMBERS ARE DESIGNED IN ACCORDANCE WITH THE AISC "SPECIFICATIONS FOR STRUCTURAL STEEL BUILDINGS" AS REQUIRED BY THE SPECIFIED BUILDING CODE.

2) ALL WELDING OF STRUCTURAL STEEL IS BASED ON AWS D1.1 "STRUCTURAL WELDING CODE", LATEST EDITION.

3) MATERIALS:
   - PLATE, FLANGE, AND WEB MATERIAL..... A572 GRADE 50 OR A529 GRADE 50
   - STRUCTURAL TUBE..... A500, Fy = 50 ksi MIN.
   - HOT-ROLLED STRUCTURAL..... A992 OR A572 GRADE 50
   - ROD BRACING..... F1554 GRADE 55
   - HIGH-STRENGTH BOLTS..... A325
   - COLD-FORMED STRUCTURAL ..... A1011 SS GRADE 57
   - STEEL CLADDING ..... R-LOC 26 GA
   - STEEL LINER ..... R-LOC 29 GA

4) BOLT TIGHTENING REQUIREMENTS:
   ALL HIGH STRENGTH BOLTS ARE A325 UNLESS NOTED OTHERWISE.
   A325 TENSION SPLICE BOLTS SHALL BE TIGHTENED BY TURN-OF-NUT METHOD IN ACCORDANCE WITH THE LATEST EDITION OF AISC "SPECIFICATION FOR STRUCTURAL JOINTS USING HIGH-STRENGTH BOLTS". A325 BOLTS SHALL BE INSTALLED WITHOUT WASHERS WHEN TIGHTENED BY TURN-OF-NUT METHOD. ALL BOLTED CONNECTIONS, FOR SHEAR/BEARING CONNECTION TYPE WITH BOLT THREADS EXCLUDED FROM THE SHEAR PLANE SHALL BE SNUG TIGHT. WASHERS ARE NOT REQUIRED UNLESS NOTED OTHERWISE.

5) ALL STRUCTURAL STEEL TO RECEIVE A PRIMER. THIS PAINT IS NOT INTENDED FOR LONG TERM EXPOSURE TO THE ELEMENTS.

6) WINDOWS AND DOORS THAT ARE PROVIDED BY OTHERS ARE ASSUMED TO MEET WIND LOADING REQUIREMENTS OF THE BUILDING STRUCTURE. THEY MUST BE PROTECTED BY AN IMPACT-PROTECTIVE SYSTEM OR HAVE IMPACT-RESISTANT GLAZING AS REQUIRED BY THE BUILDING CODE.

7) COLLATERAL LOADS, UNLESS NOTED OTHERWISE, SHALL BE UNIFORMLY DISTRIBUTED. IF CONCENTRATED LOADS ARE TO EXCEED 250 LBS, CONTACT THE METAL BUILDING SUPPLIER.

8) IF SNOW GUARDS OR OTHER DEVICES INTENDED TO HOLD SNOW AND/OR ICE ON THE ROOF SYSTEM ARE TO BE USED ON THIS BUILDING, THEY MUST BE INSTALLED UNDER THE GUIDANCE OF THE ENGINEER OF RECORD TO NOT EXCEED THE DESIGN ROOF SNOW LOAD.

FOUNDATION AND ANCHOR BOLTS:

1) FOUNDATION AND ANCHOR DESIGN IS NOT BY CLEARSPAN. THE FOUNDATION AND ANCHOR DESIGN IS BY OTHERS. REFER TO ANCHOR BOLT PLAN GENERAL NOTES - NOTE 2 ON SHEET B2 FOR FURTHER INFORMATION.

WARNING: Cancer and Reproductive Toxicity - P65Warnings.ca.gov

BUILDER / CONTRACTOR RESPONSIBILITIES

IT IS THE RESPONSIBILITY OF THE BUILDER/CONTRACTOR TO ENSURE THAT ALL PROJECT PLANS AND SPECIFICATIONS COMPLY WITH THE APPLICABLE REQUIREMENTS OF ANY GOVERNING BUILDING AUTHORITIES. THE SUPPLYING OF SEALED ENGINEERING DATA AND DRAWINGS FOR THE METAL BUILDING SYSTEM DOES NOT IMPLY OR CONSTITUTE AN AGREEMENT THAT THE METAL BUILDING SYSTEM MANUFACTURER OR ITS DESIGN ENGINEER IS ACTING AS THE ENGINEER OF RECORD OR DESIGN PROFESSIONAL FOR A CONSTRUCTION PROJECT.

APPROVAL OF THE METAL BUILDING SYSTEM MANUFACTURER'S DRAWINGS AND CALCULATIONS INDICATE THAT THE METAL BUILDING SYSTEM MANUFACTURER CORRECTLY INTERPRETED AND APPLIED THE REQUIREMENTS OF THE CONTRACT DRAWINGS AND SPECIFICATIONS. (SECT. 4.4.1 AISC CODE OF STANDARD PRACTICE, 2016 ED.) WHERE DISCREPANCIES EXIST BETWEEN THE METAL BUILDING SYSTEM MANUFACTURER'S STRUCTURAL STEEL PLANS AND THE PLANS FOR OTHER TRADES, THE STRUCTURAL STEEL PLANS SHALL GOVERN. (SECT. 3.3 AISC CODE OF STANDARD PRACTICE, 2016 ED.) DESIGN CONSIDERATIONS OF ANY MATERIALS IN THE STRUCTURE WHICH ARE NOT FURNISHED BY THE METAL BUILDING SYSTEM MANUFACTURER ARE THE RESPONSIBILITY OF THE CONTRACTORS AND ENGINEERS OTHER THAN THE METAL BUILDING SYSTEM MANUFACTURER'S ENGINEER UNLESS SPECIFICALLY INDICATED.

THE CONTRACTOR IS RESPONSIBLE FOR ALL ERECTION OF STEEL AND ASSOCIATED WORK IN COMPLIANCE WITH THE METAL BUILDING SYSTEM MANUFACTURER "FOR CONSTRUCTION" DRAWINGS.

ALL BRACING AS SHOWN AND PROVIDED BY THE METAL BUILDING SYSTEM MANUFACTURER FOR THIS BUILDING IS REQUIRED AND SHALL BE INSTALLED BY THE ERECTOR AS A PERMANENT PART OF THE STRUCTURE.

TEMPORARY SUPPORTS, SUCH AS TEMPORARY GUYS, BRACES, FALSE WORK, CRIBBING OR OTHER ELEMENTS REQUIRED FOR THE ERECTION OPERATION WILL BE DETERMINED AND FURNISHED AND INSTALLED BY THE ERECTOR. THESE TEMPORARY SUPPORTS WILL SECURE THE STEEL FRAMING, OR ANY PARTLY ASSEMBLED STEEL FRAMING, AGAINST LOADS COMPARABLE IN INTENSITY TO THOSE FOR WHICH THE STRUCTURE WAS DESIGNED, INCLUDING THOSE RESULTING FROM WIND AND ERECTION OPERATIONS, BUT NOT THE LOADS RESULTING FROM THE PERFORMANCE OF WORK BY OR THE ACTS OF OTHERS, NOR SUCH UNPREDICTABLE LOADS AS THOSE DUE TO HURRICANE, TORNADO, EARTHQUAKE, EXPLOSION, OR COLLISION. (SECT. 7.10.3 AISC CODE OF STANDARD PRACTICE, 2016 ED.)

ONCE OWNER HAS SIGNED THE APPROVAL PACKAGE AND THE PROJECT IS RELEASED FOR FABRICATION, CHANGES AFTER APPROVAL SHALL BE BILLED TO THE OWNER. CHARGES CAN INCLUDE MATERIAL, ENGINEERING, OR OTHER COSTS. AN ADDITIONAL FEE MAY BE CHARGED IF THE PROJECT MUST BE MOVED FROM FABRICATION AND SHIPPING SCHEDULE.

WARNING : IN NO CASE SHOULD GALVALUME STEEL PANELS BE USED IN CONJUNCTION WITH LEAD OR COPPER. BOTH WARNING: LEAD AND COPPER HAVE HARMFUL CORROSION EFFECTS ON THE ALUMINUM ZINC ALLOY COATING WHEN THEY ARE USED IN CONTACT WITH GALVALUME STEEL PANELS. EVEN RUN-OFF FROM COPPER FLASHING, WIRING, OR TUBING ONTO GALVALUME SHOULD BE AVOIDED.

APPROVAL NOTES

THE FOLLOWING CONDITIONS APPLY IN THE EVENT THAT THESE DRAWINGS ARE USED AS APPROVAL DRAWINGS: IT IS IMPERATIVE THAT ANY CHANGES TO THESE DRAWINGS BE MADE IN CONTRASTING INK (PREFERABLY RED INK), HAVE ALL INSTANCES OF CHANGE CLEARLY INDICATED, AND BE LEGIBLE AND UNAMBIGUOUS. A SIGNATURE AND DATE IS REQUIRED ON ALL PAGES. MANUFACTURER RESERVES THE RIGHT TO RE-SUBMIT DRAWINGS WITH EXTENSIVE OR COMPLEX CHANGES REQUIRED TO AVOID MIS-FABRICATION. THIS MAY IMPACT THE DELIVERY SCHEDULE. APPROVAL OF THESE DRAWINGS INDICATES CONCLUSIVELY THAT THE METAL BUILDING SYSTEM MANUFACTURER HAS CORRECTLY INTERPRETED THE CONTRACT REQUIREMENTS, AND FURTHER CONSTITUTES AGREEMENT THAT THE BUILDING AS DRAWN WITH INDICATED CHANGES REPRESENTS THE TOTAL OF THE MATERIALS TO BE SUPPLIED BY MANUFACTURER. ANY CHANGES NOTED ON THE DRAWINGS NOT IN CONFORMANCE WITH THE TERMS AND REQUIREMENTS OF THE CONTRACT BETWEEN MANUFACTURER AND ITS CUSTOMER ARE NOT BINDING ON MANUFACTURER UNLESS SUBSEQUENTLY SPECIFICALLY ACKNOWLEDGED AND AGREED TO IN WRITING BY CHANGE ORDER OR SEPARATE DOCUMENTATION. MANUFACTURER RECOGNIZES THAT RUBBER STAMPS ARE ROUTINELY USED FOR INDICATING APPROVAL, DISAPPROVAL, REJECTION, OR MERE REVIEW OF THE DRAWINGS SUBMITTED. HOWEVER, MANUFACTURER DOES NOT ACCEPT CHANGES OR ADDITIONS TO CONTRACTUAL TERMS AND CONDITIONS THAT MAY APPEAR WITH USE OF A STAMP OR SIMILAR INDICATION OF APPROVAL, DISAPPROVAL, ETC. SUCH LANGUAGE APPLIED TO MANUFACTURER'S DRAWINGS BY THE CUSTOMER, ARCHITECT, ENGINEER, OR ANY OTHER PARTY WILL BE CONSIDERED AS UNACCEPTABLE ALTERNATIONS TO THESE DRAWING NOTES, AND WILL NOT ALTER THE CONTRACTUAL RIGHTS AND OBLIGATIONS EXISTING BETWEEN MANUFACTURER AND ITS CUSTOMER.

THE OWNER MUST SECURE ALL REQUIRED APPROVALS AND PERMITS FROM THE APPROPRIATE AGENCY AS REQUIRED.

CUSTOMER DESIGN APPROVAL

PLEASE SIGN AND CHECK THE APPROPRIATE BOX BELOW THE SIGNATURE AFTER REVIEWING THE DOCUMENTS.
MY SIGNATURE BELOW ACKNOWLEDGES THAT I HAVE READ AND REVIEWED ALL THE SHEETS LISTED IN THE CONTENT GUIDE AND AGREE TO THE SPECIFICATIONS SHOWN UNLESS OTHERWISE NOTED.
UPON ACCEPTANCE OF THE DRAWINGS, ANY DEVIATIONS FROM THE SIGNED DRAWINGS AND SPECIFICATIONS OUTLINED IN THE EXECUTED DRAWINGS ARE SUBJECT TO ADDITIONAL CHARGES AND MAY RESULT IN DELAY OF INSTALLATION OR DELIVERY OF YOUR STRUCTURE. A CHANGE ORDER WILL BE ISSUED TO YOU WITH THE OUTLINED ADDITIONAL COST ASSOCIATED WITH THESE CHANGES AND A PROPOSED NEW DELIVERY SCHEDULE.
NO CHANGES WILL BE ACCEPTED UNLESS WE HAVE A CHANGE ORDER SIGNED BY AN AUTHORIZED REPRESENTATIVE.

CUSTOMER SIGNATURE: _____ DATE: _____

☐ APPROVE ☐ APPROVE WITH CHANGES

DRAWING INDEX

COVER SHEET:	C1, C2
ANCHOR BOLT PLAN:	B1, B2
ANCHOR BOLT REACTIONS:	BR1, BR2, BR3, BR4
PRIMARY PLANS / SECTIONS:	E1, E2, E3, E4, E5, E6, E7, E8, E9, E10, E11, E12, E13, E14, E15, E16, E17, E18, E19, E20, E21

DEVELOPED BY:
ClearSpan
ENGINEERING SERVICES & PRODUCTS CO.
1440 18TH AVENUE SW
DYERSVILLE, IA 52040
P:563.875.6113
WWW.ESAPCO.COM
WWW.CLEARSPAN.COM

ORDER #: 7878201
CUSTOMER #: 9108797

PROFESSIONAL SEAL

REV.	DESCRIPTION	CK'D	APP	DATE
5	SEISMIC DESIGN CAT. UPDATES DWG.–NO.C2			2/3
4	UPDATED PER CHANGER ORDER #3			1/23
3	BUILDING SITE CLASS UPDATES DWG.–NO.C2			8/7
2	UPDATED TITLE BLOCK AND BASE PLATE			5/21
1	BUILDING "A" BASE PLATE UPDATES			3/7

PUBLIC WORKS DEPARTMENT ENGINEERING DIVISION
CITY OF SAN BUENAVENTURA
FIRE STATION NO. 7
COVER PAGE

DRN. BY: LJO | DES. BY: XXX | CK'D. BY: XXX

PRINCIPAL ENGINEER — DATE: 5 May 2026
CITY ENGINEER — DATE: 5/7/2026

SPEC. NUMBER 2025-010 | PROJECT NUMBER FA11-1061
March 27, 2026 | SHEET 35 OF 151 | DWG. NO. 2025-D-010

FOR REFERENCE ONLY

BUILDING LOADS / DESCRIPTION: BUILDING A

WIDTH: 60 LENGTH: 80 HEIGHT: 18 / 18

SITE ADDRESS: 2269 ALESSANDRO DRIVE
VENTURA, CA 93001

(BUILDING DIMENSIONS ARE NOMINAL. REFER TO PLANS).

THIS STRUCTURE IS DESIGNED UTILIZING THE LOADS INDICATED AND
APPLIED AS REQUIRED BY : CBC 22

RISK CATEGORY: IV - Post
CONSTRUCTION TYPE: IIB

THE CONTRACTOR IS TO CONFIRM THAT THESE LOADS COMPLY WITH
THE REQUIREMENTS OF THE LOCAL BUILDING DEPARTMENT.

ROOF DEAD LOAD:	2.2	PSF (ROOF PANELS & PURLINS)			
COLLATERAL LOAD:	10.00	PSF	BASIC WIND SPEED:	105	MPH
ROOF LIVE LOAD:	20.00	PSF	WIND EXPOSURE:	C	
GROUND SNOW LOAD:	0	PSF	INTERNAL PRESSURE COEFF.:		
SNOW EXPOSURE:	1.0		0.18 /	-0.18	
THERMAL FACTOR:	1.20		WIND IMP. FACTOR	1.00	
SNOW IMP. FACTOR:	1.20		MAPPED SPECTRAL RESPONSE ACC.		SPECTRAL RESPONSE COEFF.
ROOF SNOW LOAD:	0.00	PSF	Ss 1.96		Sds 1.57
SITE CLASS:	E	3	S1 0.74		Sd1 0.98
SEISMIC DESIGN CAT.:	D	5			DESIGN BASE SHEAR, V:
SEISMIC IMP. FACTOR	1.50				EXPANDED FORMULA 0.667*Ie*Sms*W/R
Cs (LONGITUDINAL)	0.723				LONGITUDINAL 63.50
Cs (TRANSVERSE)	0.723		SEISMIC FORCE RESISTING SYSTEM		TRANSVERSE 56.55
R (LONGITUDINAL)	3.25		STEEL ORDINARY CONCENTRICALLY BRACED FRAMES		
R (TRANSVERSE)	3.25		STEEL ORDINARY MOMENT FRAMES		

BUILDING LOADS / DESCRIPTION: BUILDING B

WIDTH: 20 LENGTH: 5 HEIGHT: 19.67 / 19.67

SITE ADDRESS: 2269 ALESSANDRO DRIVE
VENTURA, CA 93001

(BUILDING DIMENSIONS ARE NOMINAL. REFER TO PLANS).

THIS STRUCTURE IS DESIGNED UTILIZING THE LOADS INDICATED AND
APPLIED AS REQUIRED BY : CBC 22

RISK CATEGORY: IV - Post
CONSTRUCTION TYPE: IIB

THE CONTRACTOR IS TO CONFIRM THAT THESE LOADS COMPLY WITH
THE REQUIREMENTS OF THE LOCAL BUILDING DEPARTMENT.

ROOF DEAD LOAD:	2.0	PSF (ROOF PANELS & PURLINS)			
COLLATERAL LOAD:	10.00	PSF	BASIC WIND SPEED:	105	MPH
ROOF LIVE LOAD:	20.00	PSF	WIND EXPOSURE:	C	
GROUND SNOW LOAD:	0	PSF	INTERNAL PRESSURE COEFF.:		
SNOW EXPOSURE:	1.0		0.18 /	-0.18	
THERMAL FACTOR:	1.20		WIND IMP. FACTOR	1.00	
SNOW IMP. FACTOR:	1.20		MAPPED SPECTRAL RESPONSE ACC.		SPECTRAL RESPONSE COEFF.
ROOF SNOW LOAD:	0.00	PSF	Ss 1.96		Sds 1.57
SITE CLASS:	E	3	S1 0.74		Sd1 0.98
SEISMIC DESIGN CAT.:	D	5			DESIGN BASE SHEAR, V:
SEISMIC IMP. FACTOR	1.50				EXPANDED FORMULA 0.667*Ie*Sms*W/R
Cs (LONGITUDINAL)	0.723				LONGITUDINAL 1.81
Cs (TRANSVERSE)	0.723		SEISMIC FORCE RESISTING SYSTEM		TRANSVERSE 1.80
R (LONGITUDINAL)	3.25		STEEL ORDINARY CONCENTRICALLY BRACED FRAMES		
R (TRANSVERSE)	3.25		STEEL ORDINARY MOMENT FRAMES		

BUILDING LOADS / DESCRIPTION: BUILDING B b

WIDTH: 20 LENGTH: 5 HEIGHT: 19.67 / 19.67

SITE ADDRESS: 2269 ALESSANDRO DRIVE
VENTURA, CA 93001

(BUILDING DIMENSIONS ARE NOMINAL. REFER TO PLANS).

THIS STRUCTURE IS DESIGNED UTILIZING THE LOADS INDICATED AND
APPLIED AS REQUIRED BY : CBC 22

RISK CATEGORY: IV - Post
CONSTRUCTION TYPE: IIB

THE CONTRACTOR IS TO CONFIRM THAT THESE LOADS COMPLY WITH
THE REQUIREMENTS OF THE LOCAL BUILDING DEPARTMENT.

ROOF DEAD LOAD:	2.0	PSF (ROOF PANELS & PURLINS)			
COLLATERAL LOAD:	10.00	PSF	BASIC WIND SPEED:	105	MPH
ROOF LIVE LOAD:	20.00	PSF	WIND EXPOSURE:	C	
GROUND SNOW LOAD:	0	PSF	INTERNAL PRESSURE COEFF.:		
SNOW EXPOSURE:	1.0		0.18 /	-0.18	
THERMAL FACTOR:	1.20		WIND IMP. FACTOR	1.00	
SNOW IMP. FACTOR:	1.20		MAPPED SPECTRAL RESPONSE ACC.		SPECTRAL RESPONSE COEFF.
ROOF SNOW LOAD:	0.00	PSF	Ss 1.96		Sds 1.57
SITE CLASS:	E	3	S1 0.74		Sd1 0.98
SEISMIC DESIGN CAT.:	D	5			DESIGN BASE SHEAR, V:
SEISMIC IMP. FACTOR	1.50				EXPANDED FORMULA 0.667*Ie*Sms*W/R
Cs (LONGITUDINAL)	0.723				LONGITUDINAL 1.81
Cs (TRANSVERSE)	0.723		SEISMIC FORCE RESISTING SYSTEM		TRANSVERSE 1.80
R (LONGITUDINAL)	3.25		STEEL ORDINARY CONCENTRICALLY BRACED FRAMES		
R (TRANSVERSE)	3.25		STEEL ORDINARY MOMENT FRAMES		

BUILDING LOADS / DESCRIPTION: BUILDING C

WIDTH: 12 LENGTH: 66.5 HEIGHT: 17 / 18

SITE ADDRESS: 2269 ALESSANDRO DRIVE
VENTURA, CA 93001

(BUILDING DIMENSIONS ARE NOMINAL. REFER TO PLANS).

THIS STRUCTURE IS DESIGNED UTILIZING THE LOADS INDICATED AND
APPLIED AS REQUIRED BY : CBC 22

RISK CATEGORY: IV - Post
CONSTRUCTION TYPE: IIB

THE CONTRACTOR IS TO CONFIRM THAT THESE LOADS COMPLY WITH
THE REQUIREMENTS OF THE LOCAL BUILDING DEPARTMENT.

ROOF DEAD LOAD:	2.2	PSF (ROOF PANELS & PURLINS)			
COLLATERAL LOAD:	10.00	PSF	BASIC WIND SPEED:	105	MPH
ROOF LIVE LOAD:	20.00	PSF	WIND EXPOSURE:	C	
GROUND SNOW LOAD:	0	PSF	INTERNAL PRESSURE COEFF.:		
SNOW EXPOSURE:	1.0		0.18 /	-0.18	
THERMAL FACTOR:	1.20		WIND IMP. FACTOR	1.00	
SNOW IMP. FACTOR:	1.20		MAPPED SPECTRAL RESPONSE ACC.		SPECTRAL RESPONSE COEFF.
ROOF SNOW LOAD:	0.00	PSF	Ss 1.96		Sds 1.57
SITE CLASS:	E	3	S1 0.74		Sd1 0.98
SEISMIC DESIGN CAT.:	D	5			DESIGN BASE SHEAR, V:
SEISMIC IMP. FACTOR	1.50				EXPANDED FORMULA 0.667*Ie*Sms*W/R
Cs (LONGITUDINAL)	0.723				LONGITUDINAL 5.33
Cs (TRANSVERSE)	0.723		SEISMIC FORCE RESISTING SYSTEM		TRANSVERSE 10.32
R (LONGITUDINAL)	3.25		STEEL ORDINARY CONCENTRICALLY BRACED FRAMES		
R (TRANSVERSE)	3.25		STEEL ORDINARY MOMENT FRAMES		

DEVELOPED BY:

ClearSpan
ENGINEERING SERVICES & PRODUCTS CO.
1440 18TH AVENUE SW
DYERSVILLE, IA 52040
P:563.875.6113
WWW.ESAPCO.COM
WWW.CLEARSPAN.COM

ORDER #: 7878201
CUSTOMER #: 9108797

PROFESSIONAL SEAL

REV.	DESCRIPTION	CK'D	APP	DATE
5	SEISMIC DESIGN CAT. UPDATES DWG.–NO.C2			2/3
4	UPDATED PER CHANGER ORDER #3			1/23
3	BUILDING SITE CLASS UPDATES DWG.–NO.C2			8/7
2	UPDATED TITLE BLOCK AND BASE PLATE			5/21
1	BUILDING "A" BASE PLATE UPDATES			3/7

PUBLIC WORKS DEPARTMENT ENGINEERING DIVISION
CITY OF SAN BUENAVENTURA

FIRE STATION NO. 7

COVER PAGE

DRN. BY: LJO DES. BY: XXX CK'D. BY: XXX

PRINCIPAL ENGINEER — DATE: 5 May 2026

CITY ENGINEER — DATE: 5/7/2026

SPEC. NUMBER 2025-010 PROJECT NUMBER FA11-1061

March 27, 2026 SHEET 36 OF 151 DWG. NO. 2025-D-010

FOR REFERENCE ONLY

FRAME-OUT SCHEDULE		
CALL-OUT	DESCRIPTION	ROUGH OPENING
A	3'-0" X 6'-8" WALK-IN DOOR	(VERIFY)
B	14'-0" X 14'-0" OVHD DOOR	14'-0" X 14'-0"
C	3'-0" X 6'-8" DOOR (BY OTHERS)	(VERIFY)

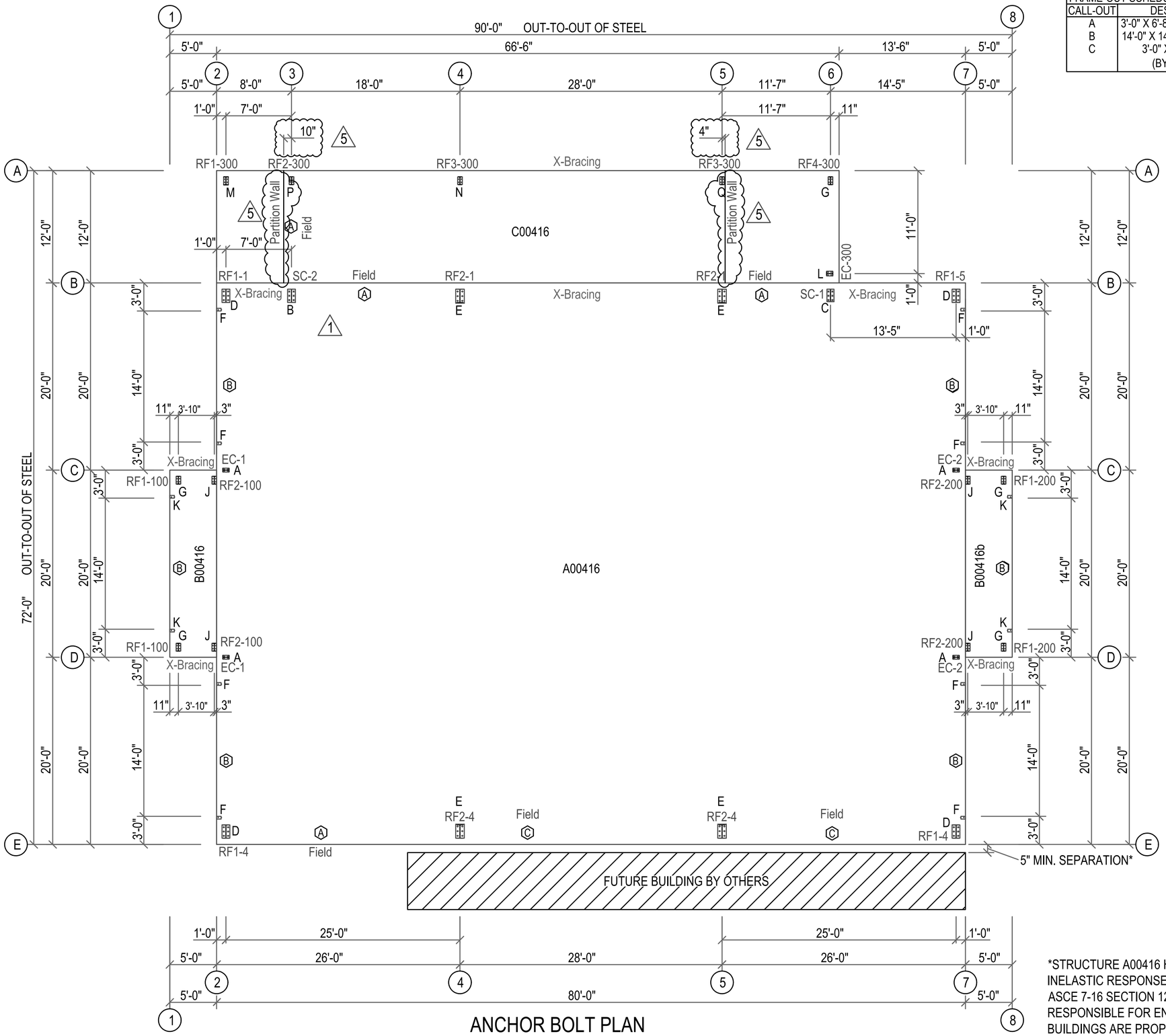

ANCHOR BOLT PLAN

NOTE: All Base Plates @ 100'-0" (U.N.)

*STRUCTURE A00416 HAS A CALCULATED MAXIMUM INELASTIC RESPONSE DISPLACEMENT OF 5" PER ASCE 7-16 SECTION 12.12.3. OWNER IS RESPONSIBLE FOR ENSURING ADJACENT BUILDINGS ARE PROPERLY ACCOUNTED FOR TO DETERMINE REQUIRED STRUCTURAL SEPARATION

DEVELOPED BY:

ClearSpan

ENGINEERING SERVICES & PRODUCTS CO.
1440 18TH AVENUE SW
DYERSVILLE, IA 52040
P:563.875.6113
WWW.ESAPCO.COM
WWW.CLEARSPAN.COM

ORDER #: 7878201

CUSTOMER #: 9108797

PROFESSIONAL SEAL

REV.	DESCRIPTION	CK'D	APP	DATE
5	SEISMIC DESIGN CAT. UPDATES DWG.–NO.C2			2/3
4	UPDATED PER CHANGER ORDER #3			1/23
3	BUILDING SITE CLASS UPDATES DWG.–NO.C2			8/7
2	UPDATED TITLE BLOCK AND BASE PLATE			5/21
1	BUILDING "A" BASE PLATE UPDATES			3/7

PUBLIC WORKS DEPARTMENT ENGINEERING DIVISION
CITY OF SAN BUENAVENTURA

FIRE STATION NO. 7

ANCHOR BOLT PLAN

DRN. BY: LJO | DES. BY: XXX | CK'D. BY: XXX

PRINCIPAL ENGINEER — DATE: 5 May 2026

CITY ENGINEER — DATE: 5/7/2026

SPEC. NUMBER 2025-010 | PROJECT NUMBER FA11-1061

March 27, 2026 | SHEET 37 OF 151 | DWG. NO. 2025-D-010

FOR REFERENCE ONLY

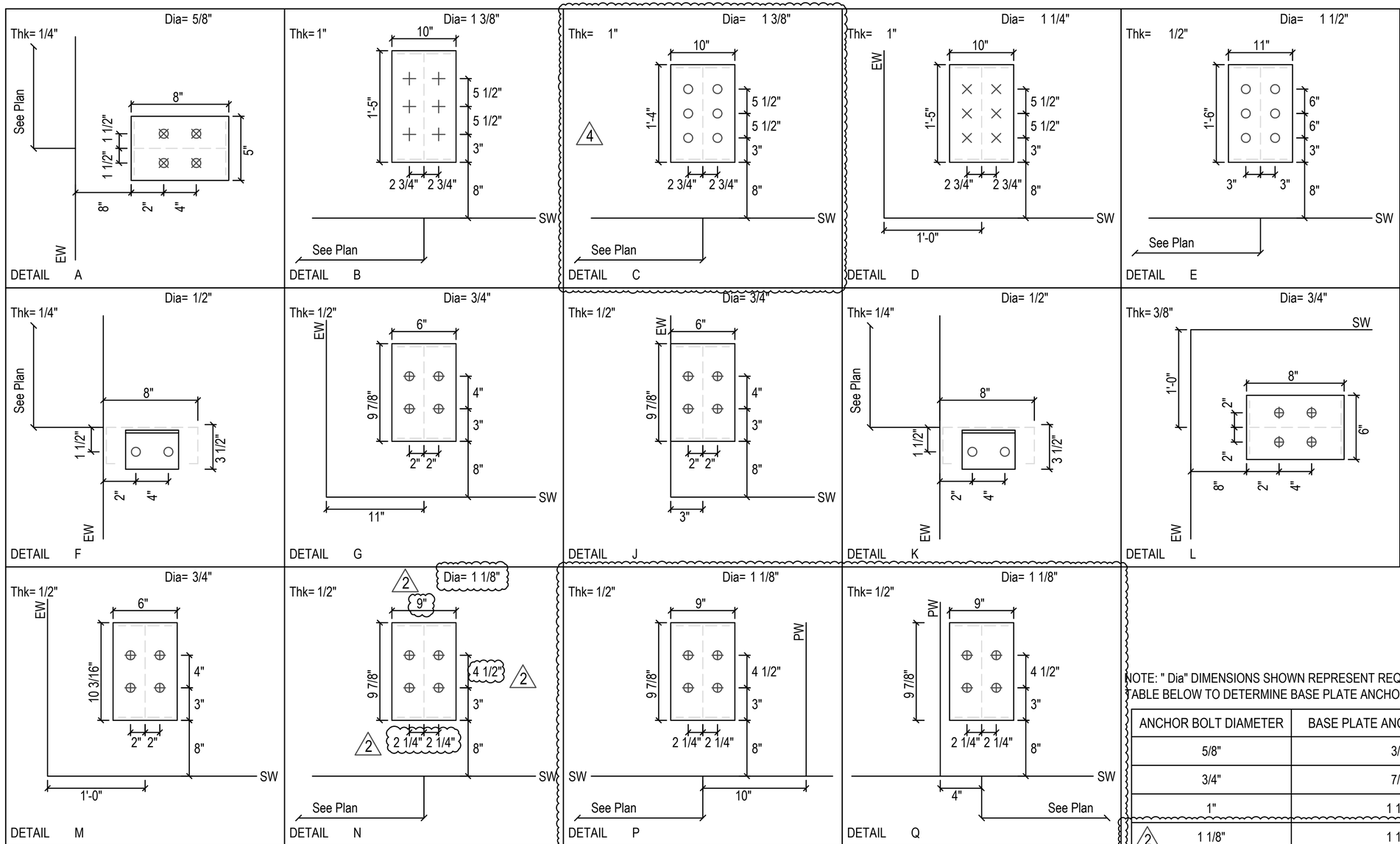

NOTE: " Dia" DIMENSIONS SHOWN REPRESENT REQUIRED ANCHOR BOLT DIAMETER. USE TABLE BELOW TO DETERMINE BASE PLATE ANCHOR HOLE SIZE PER ANCHOR DIAMETER.

ANCHOR BOLT DIAMETER	BASE PLATE ANCHOR HOLE SIZE	PROJECTION
5/8"	3/4"	3"
3/4"	7/8"	3"
1"	1 1/8"	3"
2 1 1/8"	1 1/4"	3"
1 1/4"	1 3/8"	3"
1 3/8"	1 1/2"	3"
1 1/2"	1 5/8"	3"

** REFER TO FOUNDATION DRAWINGS FOR WHICH HOLES TO USE.

ANCHOR BOLT SETTING NOTE

1) THE ANCHOR BOLT SETTINGS SHOWN ON THESE DRAWINGS NOT ONLY INDICATE WHERE THE ANCHOR BOLTS ARE TO BE PLACED, BUT ALSO THE FOOTPRINT OF THE BUILDING. IT IS ESSENTIAL THAT THESE BOLT PATTERNS BE FOLLOWED. IN THE EVENT THAT THESE SETTINGS DIFFER FROM THE FOUNDATION PLANS, THE BUILDING MANUFACTURER MUST BE CONTACTED IMMEDIATELY.

TYPICAL BASE PLATE ELEVATION

FINISHED FLOOR = 100'-0"
BOTTOM OF BASE PLATE ELEVATION = 100'-0"

ANCHOR BOLT PLAN GENERAL NOTES

1) THE SPECIFIED ANCHOR ROD DIAMETER ASSUMES F1554 GRADE 36 UNLESS NOTED OTHERWISE. ANCHOR ROD MATERIAL OF EQUAL DIAMETER MEETING OR EXCEEDING THE STRENGTH REQUIREMENTS SET FORTH ON THESE DRAWINGS MAY BE UTILIZED AT THE DISCRETION OF THE FOUNDATION DESIGN ENGINEER. ANCHOR ROD EMBEDMENT LENGTH SHALL BE DETERMINED BY THE FOUNDATION DESIGN ENGINEER.

2) THE FOUNDATION AND ANCHORS ARE CRITICAL ELEMENTS FOR THE BUILDING TO FUNCTION AS DESIGNED. UNLESS NOTED OTHERWISE ON SHEET C1, THE OWNER IS RESPONSIBLE FOR ENSURING THE FOUNDATION IS DESIGNED FOR THE BUILDING BY A PROFESSIONAL IN ACCORDANCE WITH LOCAL REQUIREMENTS.

3) ALL ANCHOR RODS, FLAT WASHERS FOR ANCHOR RODS, EXPANSION BOLTS, AS WELL AS ALL CONCRETE/MASONRY EMBEDMENT PLATES ARE NOT BY BUILDING MANUFACTURER, UNLESS NOTED OTHERWISE.

4) THIS DRAWING IS NOT TO SCALE.

5) THE ANCHOR BOLT LOCATIONS PROVIDED BY BUILDING MANUFACTURER SATISFY PERTINENT REQUIREMENTS FOR THE DESIGN OF THE MATERIALS SUPPLIED BY THE BUILDING MANUFACTURER. PLEASE NOTE THAT THESE REQUIREMENTS MAY NOT SATISFY ALL ANCHOR BOLT EDGE DISTANCE REQUIREMENTS DEPENDING ON THE DETAILS OF THE FOUNDATION DESIGN. BECAUSE FOUNDATION DESIGN IS NOT WITHIN THE BUILDING SCOPE OF WORK, IT IS THE RESPONSIBILITY OF THE QUALIFIED PROFESSIONAL DESIGNING THE FOUNDATION TO MAKE SURE THAT SUFFICIENT CONCRETE EDGE DISTANCE IS PROVIDED FOR THE ANCHOR BOLTS IN THE DETAILS OF THE FOUNDATION DESIGN.

DEVELOPED BY:
ClearSpan
ENGINEERING SERVICES & PRODUCTS CO.
1440 18TH AVENUE SW
DYERSVILLE, IA 52040
P:563.875.6113
WWW.ESAPCO.COM
WWW.CLEARSPAN.COM

ORDER #: 7878201
CUSTOMER #: 9108797

PROFESSIONAL SEAL

REV.	DESCRIPTION	CK'D	APP	DATE
5	SEISMIC DESIGN CAT. UPDATES DWG.–NO.C2			2/3
4	UPDATED PER CHANGER ORDER #3			1/23
3	BUILDING SITE CLASS UPDATES DWG.–NO.C2			8/7
2	UPDATED TITLE BLOCK AND BASE PLATE			5/21
1	BUILDING "A" BASE PLATE UPDATES			3/7

PUBLIC WORKS DEPARTMENT ENGINEERING DIVISION
CITY OF SAN BUENAVENTURA
FIRE STATION NO. 7
ANCHOR BOLT DETAILS

DRN. BY: LJO | DES. BY: XXX | CK'D. BY: XXX
PRINCIPAL ENGINEER — DATE: 5 May 2026
CITY ENGINEER — DATE: 5/7/2026
SPEC. NUMBER 2025-010 | PROJECT NUMBER FA11-1061
March 27, 2026 | SHEET 38 OF 151 | DWG. NO. 2025-D-010

FOR REFERENCE ONLY

NOTES FOR REACTIONS

1. All loading conditions are examined and only maximum/minimum H or V and the corresponding H or V are reported.
2. Positive reactions are as shown in the sketch. Foundation loads are in opposite directions.
3. Bracing reactions are in the plane of the brace with the H pointing away from the braced bay. The vertical reaction is downward.
4. Building reactions are based on the following building data:

Width	(ft)	= 60.0
Length	(ft)	= 80.0
Eave Height	(ft)	= 18.0/ 18.0
Roof Slope	(rise/12)	= 1.00/ 1.00
Roof Dead Load	(psf)	= 2.2
Wall Dead Load		
Left Endwall	(psf)	= 2.0
Right Endwall	(psf)	= 2.0
Front Sidewall	(psf)	= 2.0
Back Sidewall	(psf)	= 2.0
Roof Live Load	(psf)	= 20.0
Frame Live Load	(psf)	= 12.0
Collateral Load	(psf)	= 10.0
Wind Speed	(mph)	=105.0
Wind Code		=CBC 22 (IBC 21)
Exposure		=C
Closure		=Enclosed
Internal Wind Coeff		=-0.18, +0.18
Risk Category		=IV - Post
Importance - Wind		= 1.00
Importance - Seismic		= 1.50
Seismic Design Category		=E
Seismic Coeff	(Sms)	= 2.35

5. Loading conditions are:

1 0.6Dead+0.6Wind_Left1
2 0.6Dead+0.6Wind_Right1
3 0.6Dead+0.6Wind_Long2L
4 1.22Dead+1.22Collateral+0.7Seismic_LongR
5 1.16Dead+1.16Collateral+0.75Live+0.53Seismic_Left
6 1.16Dead+1.16Collateral+0.75Live+0.53Seismic_Right
7 1.16Dead+1.16Collateral+0.75Live+0.53Seismic_LongR
8 0.38Dead+0.7Seismic_Left
9 0.38Dead+0.7Seismic_Right
10 0.38Dead+0.7Seismic_LongL
11 0.6Dead+0.6Wind_Right2+0.6Wind_Suction
12 0.6Dead+0.6Wind_Pressure+0.6Wind_Long2L
13 1.22Dead+1.22Collateral+0.7Seismic_LongR
14 0.6Dead+0.6Wind_Pressure
15 0.6Dead+0.6Wind_Suction
16 1.33Dead+0.7Seismic_LongL
17 0.27Dead+0.7Seismic_LongR

BUILDING BRACING REACTIONS

Wall Loc	Wall Line	Col Line		Reactions in plane of wall Reactions(k) Wind Horz	Seismic Horz	Panel_Shear (lb/ft) Wind	Seis	Note
L_EW	2							(h)
F_SW	E	2,4		0.81	6.43			(b)
		4,5		0.81	6.43			(b)
		5,7		0.81	6.43			(b)
R_EW	7							(h)
B_SW	B	7,6	*	1.97	16.04			
		5,4	*	1.97	16.04			
		3,2	*	1.97	16.04			

(b)Wind bent in bay, base above finish floor
(h)Rigid frame at endwall

*See RF reactions table for vertical and horizontal reactions in plane of the rigid frame.

Reactions for seismic represent shear force, Eh
Reaction values shown are unfactored

ENDWALL COLUMN: BASIC COLUMN REACTIONS (k)

Frm Line	Col Line	Dead Vert	Wind Press Horz	Wind Suct Horz	Seis Long Horz
2	C	0.18	-1.69	1.87	0.17
2	D	0.18	-1.69	1.87	0.17
7	D	0.18	-1.69	1.87	0.17
7	C	0.18	-1.69	1.87	0.17

SOLDIER COLUMN: BASIC COLUMN REACTIONS (k)

Frm Line	Col Line	Dead Vert	Collateral Horz	Collateral Vert	Live Vert	Wind_Press Horz	Wind_Press Vert	Wind_Suct Horz	Wind_Suct Vert	Wind_Long1 Horz	Wind_Long1 Vert	Seis Long Vert
3	B	0.51	-0.18	1.49	1.24	2.13	-1.36	-2.38	-0.43	-1.57	4.59	37.42
6	B	0.44	0.00	0.33	0.66	2.15	-0.91	-2.37	-0.27	-1.57	2.39	19.53

ENDWALL COLUMN: MAXIMUM REACTIONS

Frm Line	Col Line	Column_Reactions(k) Load Id	Horz	Vert
2	C	11	1.12	0.11
		12	-1.01	0.11
		13	-0.12	0.22
2	D	11	1.12	0.11
		12	-1.01	0.11
		13	-0.12	0.22
7	D	11	1.12	0.11
		12	-1.01	0.11
		13	-0.12	0.22
7	C	11	1.12	0.11
		12	-1.01	0.11
		13	-0.12	0.22

SOLDIER COLUMN: MAXIMUM REACTIONS

Frm Line	Col Line	Column_Reactions(k) Load Id	Horz	Vert
3	B	14	1.28	-0.51
		15	-1.43	0.05
		16	0.00	26.87
		17	0.00	-26.06
6	B	14	1.29	-0.28
		15	-1.42	0.10
		16	0.00	14.25
		17	0.00	-13.55

4

FRAME LINES: 2 4 5 7

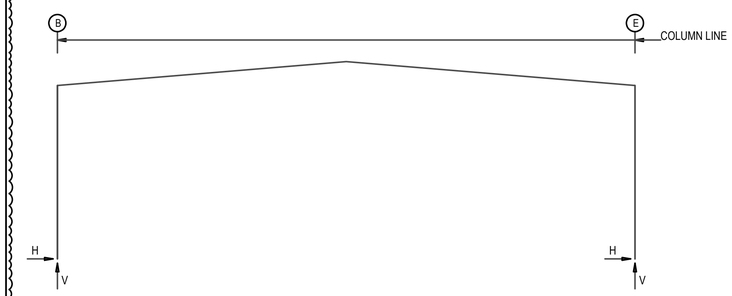

RIGID FRAME: MAXIMUM REACTIONS

Frm Id	Col Line	Column_Reactions(k) Load Id	Horz	Vert
1*	B	4	4.61	34.55
		6	10.65	14.70
		8	-5.49	-2.39
		10	0.36	-25.24
1*	E	3	1.80	-5.00
		5	-10.85	14.19
		7	-6.77	16.01
		9	5.41	-2.38
1*	Frame lines:	2 7		

RIGID FRAME: MAXIMUM REACTIONS

Frm Id	Col Line	Column_Reactions(k) Load Id	Horz	Vert
2*	B	1	-5.72	-8.28
		6	19.65	29.31
		7	11.86	29.82
		8	-9.97	-4.58
2*	E	2	6.44	-7.48
		5	-20.07	26.24
		9	9.94	-4.55
2*	Frame lines:	4 5		

RIGID FRAME: BASIC COLUMN REACTIONS (k)

Frame Id	Column Line	-----Dead---- Horz	Vert	--Collateral- Horz	Vert	-----Live---- Horz	Vert	--Wind_Left1- Horz	Vert	-Wind_Right1- Horz	Vert	--Wind_Left2- Horz	Vert
1*	B	0.95	2.53	2.50	4.46	2.95	5.48	-7.48	-10.84	-1.20	-5.90	-6.74	-7.65
1*	E	-0.98	2.46	-2.58	4.29	-3.11	5.14	1.55	-5.87	7.74	-10.42	0.41	-2.52
2*	B	1.59	4.06	4.85	10.35	5.65	12.17	-11.12	-17.87	-0.50	-9.49	-10.84	-11.75
2*	E	-1.63	3.79	-4.99	8.44	-5.93	10.07	1.65	-9.41	12.36	-16.26	-0.81	-2.41

Frame Id	Column Line	-Wind_Right2- Horz	Vert	--Wind_Long1- Horz	Vert	--Wind_Long2- Horz	Vert	-Seismic_Left Horz	Vert	Seismic_Right Horz	Vert	Seismic_Long1 Horz	Vert
1*	B	-0.46	-2.70	-1.62	-13.36	-1.98	-11.35	-8.37	-4.78	8.37	4.69	0.00	-37.42
1*	E	6.60	-7.07	4.34	-8.77	3.98	-10.78	-8.27	4.74	8.26	-4.74	0.00	-7.94
2*	B	-0.12	-3.34	-1.45	-14.91	-1.92	-12.26	-15.10	-8.76	15.12	8.37	0.00	-9.36
2*	E	10.00	-9.29	6.45	-13.57	5.98	-16.21	-15.10	8.57	15.09	-8.56	0.00	-7.94

Frame Id	Column Line	Seismic_Long2 Horz	Vert
1*	B	0.00	37.42
1*	E	0.00	7.94
2*	B	0.00	9.36
2*	E	0.00	7.94

1* Frame lines: 2 7
2* Frame lines: 4 5

4

BUILDING A00416

DEVELOPED BY:

ClearSpan
ENGINEERING SERVICES & PRODUCTS CO.
1440 18TH AVENUE SW
DYERSVILLE, IA 52040
P:563.875.6113
WWW.ESAPCO.COM
WWW.CLEARSPAN.COM

ORDER #: 7878201
CUSTOMER #: 9108797

PROFESSIONAL SEAL

REV.	DESCRIPTION	CK'D	APP	DATE
5	SEISMIC DESIGN CAT. UPDATES DWG.–NO.C2			2/3
4	UPDATED PER CHANGER ORDER #3			1/23
3	BUILDING SITE CLASS UPDATES DWG.–NO.C2			8/7
2	UPDATED TITLE BLOCK AND BASE PLATE			5/21
1	BUILDING "A" BASE PLATE UPDATES			3/7

PUBLIC WORKS DEPARTMENT ENGINEERING DIVISION
CITY OF SAN BUENAVENTURA

FIRE STATION NO. 7

ANCHOR BOLT REACTIONS BUILDING A

DRN. BY: LJO | DES. BY: XXX | CK'D. BY: XXX

PRINCIPAL ENGINEER — DATE 5 May 2026
CITY ENGINEER — DATE 5/7/2026

SPEC. NUMBER 2025-D-010 | PROJECT NUMBER FA11-1061
March 27, 2026 | SHEET 39 OF 151 | DWG. NO. 2025-D-010

FOR REFERENCE ONLY

NOTES FOR REACTIONS

1. All loading conditions are examined and only maximum/minimum H or V and the corresponding H or V are reported.
2. Positive reactions are as shown in the sketch. Foundation loads are in opposite directions.
3. Bracing reactions are in the plane of the brace with the H pointing away from the braced bay. The vertical reaction is downward.
4. Building reactions are based on the following building data:

Width	(ft)	= 20.0
Length	(ft)	= 5.0
Eave Height	(ft)	= 19.7/ 19.7
Roof Slope	(rise/12)	= 1.00/ 1.00
Roof Dead Load	(psf)	= 2.0
Wall Dead Load		
Left Endwall	(psf)	= 2.0
Right Endwall	(psf)	= 2.0
Front Sidewall	(psf)	= 2.0
Back Sidewall	(psf)	= 2.0
Live Load	(psf)	= 20.0
Collateral Load	(psf)	= 10.0
Wind Speed	(mph)	=105.0
Wind Code		=CBC 22 (IBC 21)
Exposure		=C
Closure		=Enclosed
Internal Wind Coeff		=-0.18, +0.18
Risk Category		=IV - Post
Importance - Wind		= 1.00
Importance - Seismic		= 1.50
Seismic Design Category		=E
Seismic Coeff	(Sms)	= 2.35

5. Loading conditions are:

1 Dead+0.6Wind_Long2R
2 0.6Dead+0.6Wind_Long1L
3 1.22Dead+1.22Collateral+0.7Seismic_Left
4 1.22Dead+1.22Collateral+0.7Seismic_Right
5 0.38Dead+0.7Seismic_Left
6 0.38Dead+0.7Seismic_Right

BUILDING BRACING REACTIONS

Wall Loc	Wall Line	Col Line		Reactions in plane of wall Reactions(k) Wind Horz	Seismic Horz	Panel_Shear (lb/ft) Wind	Seis	Note
L_EW	1							(h)
F_SW	D	1,2	*	2.46	1.23			
R_EW	2							(h)
B_SW	C	2,1	*	2.46	1.23			

(h)Rigid frame at endwall

*See RF reactions table for vertical and horizontal reactions in plane of the rigid frame.

Reactions for seismic represent shear force, Eh
Reaction values shown are unfactored

FRAME LINES: 1 2

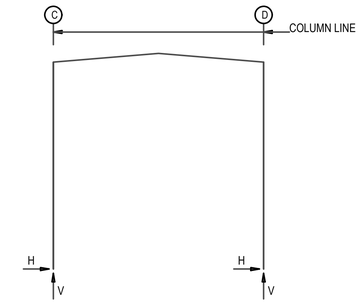

RIGID FRAME: MAXIMUM REACTIONS

Frm Id	Col Line	Load Id	Column_Reactions(k) Horz	Vert
1*	C	1	0.15	7.35
		2	0.22	-7.19
		4	0.52	1.84
		5	-0.46	-0.83
1*	D	1	-0.15	7.35
		2	-0.22	-7.19
		3	-0.52	1.84
		6	0.46	-0.83

1* Frame lines: 1

RIGID FRAME: MAXIMUM REACTIONS

Frm Id	Col Line	Load Id	Column_Reactions(k) Horz	Vert
2*	C	1	0.12	7.32
		2	0.17	-7.09
		4	0.44	1.55
		5	-0.38	-0.68
2*	D	1	-0.12	7.32
		2	-0.17	-7.09
		3	-0.44	1.55
		6	0.38	-0.68

2* Frame lines: 2

RIGID FRAME: BASIC COLUMN REACTIONS (k)

Frame Id	Column Line	-----Dead---- Horz	Vert	--Collateral- Horz	Vert	-----Live---- Horz	Vert	--Wind_Left1- Horz	Vert	-Wind_Right1- Horz	Vert	--Wind_Left2- Horz	Vert
1*	C	0.01	0.40	0.03	0.30	0.05	0.59	-0.59	-1.28	0.41	-0.02	-0.76	-1.05
1*	D	-0.01	0.40	-0.03	0.30	-0.05	0.59	-0.41	-0.02	0.59	-1.28	-0.24	0.21
2*	C	0.01	0.37	0.02	0.23	0.05	0.46	-0.46	-0.98	0.31	-0.02	-0.60	-0.80
2*	D	-0.01	0.37	-0.02	0.23	-0.05	0.46	-0.31	-0.02	0.46	-0.98	-0.17	0.16

Frame Id	Column Line	-Wind_Right2- Horz	Vert	--Wind_Long1- Horz	Vert	--Wind_Long2- Horz	Vert	-Seismic_Left Horz	Vert	Seismic_Right Horz	Vert	Seismic_Long1 Horz	Vert
1*	C	0.24	0.21	0.35	-12.38	0.22	-11.54	-0.67	-1.41	0.67	1.41	0.00	-5.79
1*	D	0.76	-1.05	-0.35	-12.38	-0.22	-11.54	-0.67	1.41	0.67	-1.41	0.00	-5.79
2*	C	0.17	0.16	0.27	-12.19	0.18	-11.55	-0.56	-1.17	0.56	1.17	0.00	-5.79
2*	D	0.60	-0.80	-0.27	-12.19	-0.18	-11.55	-0.56	1.17	0.56	-1.17	0.00	-5.79

Frame Id	Column Line	Seismic_Long2 Horz	Vert	--Wind_Left3- Horz	Vert	-Wind_Right3- Horz	Vert	--Wind_Left4- Horz	Vert	-Wind_Right4- Horz	Vert
1*	C	0.00	5.79	-0.56	-0.78	0.47	0.36	-0.74	-0.55	0.29	0.59
1*	D	0.00	5.79	-0.47	0.36	0.56	-0.78	-0.29	0.59	0.74	-0.55
2*	C	0.00	5.79	-0.43	-0.60	0.35	0.28	-0.57	-0.42	0.22	0.45
2*	D	0.00	5.79	-0.35	0.28	0.43	-0.60	-0.22	0.45	0.57	-0.42

1* Frame lines: 1
2* Frame lines: 2

BUILDING B00416

4

DEVELOPED BY:
ClearSpan
ENGINEERING SERVICES & PRODUCTS CO.
1440 18TH AVENUE SW
DYERSVILLE, IA 52040
P:563.875.6113
WWW.ESAPCO.COM
WWW.CLEARSPAN.COM

ORDER #: 7878201
CUSTOMER #: 9108797

PROFESSIONAL SEAL

REV.	DESCRIPTION	CK'D	APP	DATE
5	SEISMIC DESIGN CAT. UPDATES DWG.--NO.C2			2/3
4	UPDATED PER CHANGER ORDER #3			1/23
3	BUILDING SITE CLASS UPDATES DWG.--NO.C2			8/7
2	UPDATED TITLE BLOCK AND BASE PLATE			5/21
1	BUILDING "A" BASE PLATE UPDATES			3/7

PUBLIC WORKS DEPARTMENT ENGINEERING DIVISION
CITY OF SAN BUENAVENTURA
FIRE STATION NO. 7
ANCHOR BOLT REACTIONS BUILDING B

DRN. BY: LJO | DES. BY: XXX | CK'D. BY: XXX

PRINCIPAL ENGINEER — DATE: 5 May 2026
CITY ENGINEER — DATE: 5/7/2026

SPEC. NUMBER 2025-010 | PROJECT NUMBER FA11-1061
March 27, 2026 | SHEET 40 OF 151 | DWG. NO. 2025-D-010

FOR REFERENCE ONLY

NOTES FOR REACTIONS

1. All loading conditions are examined and only maximum/minimum H or V and the corresponding H or V are reported.
2. Positive reactions are as shown in the sketch. Foundation loads are in opposite directions.
3. Bracing reactions are in the plane of the brace with the H pointing away from the braced bay. The vertical reaction is downward.
4. Building reactions are based on the following building data:

Width	(ft)	= 20.0
Length	(ft)	= 5.0
Eave Height	(ft)	= 19.7/ 19.7
Roof Slope	(rise/12)	= 1.00/ 1.00
Roof Dead Load	(psf)	= 2.0
Wall Dead Load		
Left Endwall	(psf)	= 2.0
Right Endwall	(psf)	= 2.0
Front Sidewall	(psf)	= 2.0
Back Sidewall	(psf)	= 2.0
Live Load	(psf)	= 20.0
Collateral Load	(psf)	= 10.0
Wind Speed	(mph)	=105.0
Wind Code		=CBC 22 (IBC 21)
Exposure		=C
Closure		=Enclosed
Internal Wind Coeff		=-0.18, +0.18
Risk Category		=IV - Post
Importance - Wind		= 1.00
Importance - Seismic		= 1.50
Seismic Design Category		=E
Seismic Coeff	(Sms)	= 2.35

5. Loading conditions are:

1 Dead+0.6Wind_Long2R
2 0.6Dead+0.6Wind_Long1L
3 1.22Dead+1.22Collateral+0.7Seismic_Left
4 1.22Dead+1.22Collateral+0.7Seismic_Right
5 0.38Dead+0.7Seismic_Left
6 0.38Dead+0.7Seismic_Right

BUILDING BRACING REACTIONS

Wall Loc	Wall Line	Col Line		Reactions in plane of wall Reactions(k) Wind Horz	Seismic Horz	Panel_Shear (lb/ft) Wind	Seis	Note
L_EW	8							(h)
F_SW	C	8,7	*	2.46	1.23			
R_EW	7							(h)
B_SW	D	7,8	*	2.46	1.23			

(h)Rigid frame at endwall

*See RF reactions table for vertical and horizontal reactions in plane of the rigid frame.

Reactions for seismic represent shear force, Eh
Reaction values shown are unfactored

FRAME LINES: 8 7

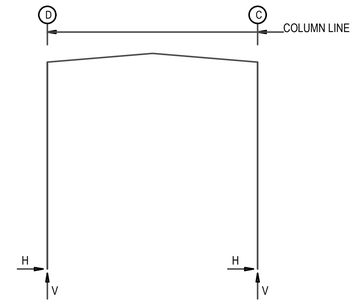

RIGID FRAME: MAXIMUM REACTIONS

Frm Id	Col Line	Column_Reactions(k) Load Id	Horz	Vert
1*	D	1	0.15	7.35
		2	0.22	-7.19
		4	0.52	1.84
		5	-0.46	-0.83
1*	C	1	-0.15	7.35
		2	-0.22	-7.19
		3	-0.52	1.84
		6	0.46	-0.83

1* Frame lines: 8

RIGID FRAME: MAXIMUM REACTIONS

Frm Id	Col Line	Column_Reactions(k) Load Id	Horz	Vert
2*	D	1	0.12	7.32
		2	0.17	-7.09
		4	0.44	1.55
		5	-0.38	-0.68
2*	C	1	-0.12	7.32
		2	-0.17	-7.09
		3	-0.44	1.55
		6	0.38	-0.68

2* Frame lines: 7

RIGID FRAME: BASIC COLUMN REACTIONS (k)

Frame Id	Column Line	-----Dead---- Horz	Vert	--Collateral- Horz	Vert	-----Live---- Horz	Vert	--Wind_Left1- Horz	Vert	-Wind_Right1- Horz	Vert	--Wind_Left2- Horz	Vert
1*	D	0.01	0.40	0.03	0.30	0.05	0.59	-0.59	-1.28	0.41	-0.02	-0.76	-1.05
1*	C	-0.01	0.40	-0.03	0.30	-0.05	0.59	-0.41	-0.02	0.59	-1.28	-0.24	0.21
2*	D	0.01	0.37	0.02	0.23	0.05	0.46	-0.46	-0.98	0.31	-0.02	-0.60	-0.80
2*	C	-0.01	0.37	-0.02	0.23	-0.05	0.46	-0.31	-0.02	0.46	-0.98	-0.17	0.16

Frame Id	Column Line	-Wind_Right2- Horz	Vert	--Wind_Long1- Horz	Vert	--Wind_Long2- Horz	Vert	-Seismic_Left Horz	Vert	Seismic_Right Horz	Vert	Seismic_Long1 Horz	Vert
1*	D	0.24	0.21	0.35	-12.38	0.22	-11.54	-0.67	-1.41	0.67	1.41	0.00	-5.79
1*	C	0.76	-1.05	-0.35	-12.38	-0.22	-11.54	-0.67	1.41	0.67	-1.41	0.00	-5.79
2*	D	0.17	0.16	0.27	-12.19	0.18	-11.55	-0.56	-1.17	0.56	1.17	0.00	-5.79
2*	C	0.60	-0.80	-0.27	-12.19	-0.18	-11.55	-0.56	1.17	0.56	-1.17	0.00	-5.79

Frame Id	Column Line	Seismic_Long2 Horz	Vert	--Wind_Left3- Horz	Vert	-Wind_Right3- Horz	Vert	--Wind_Left4- Horz	Vert	-Wind_Right4- Horz	Vert
1*	D	0.00	5.79	-0.56	-0.78	0.47	0.36	-0.74	-0.55	0.29	0.59
1*	C	0.00	5.79	-0.47	0.36	0.56	-0.78	-0.29	0.59	0.74	-0.55
2*	D	0.00	5.79	-0.43	-0.60	0.35	0.28	-0.57	-0.42	0.22	0.45
2*	C	0.00	5.79	-0.35	0.28	0.43	-0.60	-0.22	0.45	0.57	-0.42

1* Frame lines: 8
2* Frame lines: 7

BUILDING B00416b

4

DEVELOPED BY:

ClearSpan

ENGINEERING SERVICES & PRODUCTS CO.
1440 18TH AVENUE SW
DYERSVILLE, IA 52040
P:563.875.6113
WWW.ESAPCO.COM
WWW.CLEARSPAN.COM

ORDER #: 7878201

CUSTOMER #: 9108797

PROFESSIONAL SEAL

REV.	DESCRIPTION	CK'D	APP	DATE
5	SEISMIC DESIGN CAT. UPDATES DWG.–NO.C2			2/3
4	UPDATED PER CHANGER ORDER #3			1/23
3	BUILDING SITE CLASS UPDATES DWG.–NO.C2			8/7
2	UPDATED TITLE BLOCK AND BASE PLATE			5/21
1	BUILDING "A" BASE PLATE UPDATES			3/7

PUBLIC WORKS DEPARTMENT ENGINEERING DIVISION
CITY OF SAN BUENAVENTURA

FIRE STATION NO. 7

ANCHOR BOLT REACTIONS BUILDING B b

DRN. BY: LJO | DES. BY: XXX | CK'D. BY: XXX

PRINCIPAL ENGINEER — DATE: 5 May 2026

CITY ENGINEER — DATE: 5/7/2026

SPEC. NUMBER 2025-010 | PROJECT NUMBER FA11-1061

March 27, 2026 | SHEET 41 OF 151 | DWG. NO. 2025-D-010

FOR REFERENCE ONLY

NOTES FOR REACTIONS

1. All loading conditions are examined and only maximum/minimum H or V and the corresponding H or V are reported.
2. Positive reactions are as shown in the sketch. Foundation loads are in opposite directions.
3. Bracing reactions are in the plane of the brace with the H pointing away from the braced bay. The vertical reaction is downward.
4. Building reactions are based on the following building data:

Width	(ft)	= 12.0
Length	(ft)	= 66.5
Eave Height	(ft)	= 17.0/ 18.0
Roof Slope	(rise/12)	= 1.00
Roof Dead Load	(psf)	= 2.2
Wall Dead Load		
Left Endwall	(psf)	= 2.0
Right Endwall	(psf)	= 2.0
Front Sidewall	(psf)	= 2.0
Back Sidewall	(psf)	= 2.0
Live Load	(psf)	= 20.0
Collateral Load	(psf)	= 10.0
Wind Speed	(mph)	=105.0
Wind Code		=CBC 22 (IBC 21)
Exposure		=C
Closure		=Enclosed
Internal Wind Coeff		=-0.18, +0.18
Risk Category		=IV - Post
Importance - Wind		= 1.00
Importance - Seismic		= 1.50
Seismic Design Category		=E
Seismic Coeff	(Sms)	= 2.35

5. Loading conditions are:

1 Dead+Collateral+Live
2 Dead+0.6Wind_Long2L
3 Dead+0.6Wind_Long2R
4 Dead+Collateral+0.75Live+0.45Wind_Long2R
5 0.6Dead+0.6Wind_Left1
6 0.6Dead+0.6Wind_Left2
7 0.6Dead+0.6Wind_Long1R
8 0.6Dead+0.6Wind_Long2R
9 1.22Dead+1.22Collateral+0.7Seismic_Left
10 1.16Dead+1.16Collateral+0.75Live+0.53Seismic_LongR
11 0.38Dead+0.7Seismic_Right
12 0.38Dead+0.7Seismic_LongL
13 0.6Dead+0.6Wind_Right2+0.6Wind_Suction
14 0.6Dead+0.6Wind_Pressure+0.6Wind_Long2L
15 1.22Dead+1.22Collateral+0.7Seismic_Right

BUILDING BRACING REACTIONS

Wall Loc	Wall Line	Col Line		Reactions in plane of wall Wind Horz	Reactions in plane of wall Seismic Horz	Panel_Shear (lb/ft) Wind	Panel_Shear (lb/ft) Seis	Note
L_EW	2							(h)
F_SW	B							(f)
R_EW	6							(h)
B_SW	A	5,4	*	0.98	7.28			

(f)Bracing loads are applied to adjacent building
(h)Rigid frame at endwall

*See RF reactions table for vertical and horizontal reactions in plane of the rigid frame.

Reactions for seismic represent shear force, Eh
Reaction values shown are unfactored

RIGID FRAME: MAXIMUM REACTIONS

Column_Reactions(k)

Frm Id	Col Line	Load Id	Horz	Vert
4*	A	1	0.12	1.93
		6	-0.48	-0.14
		7	0.36	-0.70
		8	0.39	-0.36
4*	B	1	-0.12	1.11
		5	-0.18	-0.48
		9	-1.12	0.50
		11	1.05	0.09

4* Frame lines: 6

RIGID FRAME: BASIC COLUMN REACTIONS (k)

Frame Id	Column Line	-----Dead---- Horz	Vert	--Collateral- Horz	Vert	-----Live---- Horz	Vert	--Wind_Left1- Horz	Vert	-Wind_Right1- Horz	Vert	--Wind_Left2- Horz	Vert
1*	A	0.01	0.53	0.03	0.36	0.07	0.72	-0.39	-0.86	0.39	-0.63	-0.63	-0.53
1*	B	-0.01	0.08	-0.03	0.21	-0.07	0.42	-0.19	-0.60	0.68	-0.20	-0.59	-0.50
2*	A	0.02	0.48	0.07	0.97	0.14	1.92	-0.64	-1.74	0.88	-1.48	-1.28	-0.79
2*	B	-0.02	0.18	-0.07	0.62	-0.14	1.24	-0.32	-1.36	1.61	-0.43	-1.45	-1.12
3*	A	0.03	0.65	0.12	1.77	0.24	3.38	-1.01	-2.97	1.52	-2.57	-2.19	-1.23
3*	B	-0.03	0.29	-0.12	1.14	-0.24	2.17	-0.44	-2.28	2.77	-0.75	-2.51	-1.85
4*	A	0.01	0.38	0.04	0.52	0.07	1.03	-0.47	-1.12	0.54	-0.91	-0.82	-0.61
4*	B	-0.01	0.11	-0.04	0.33	-0.07	0.66	-0.28	-0.91	0.98	-0.27	-0.89	-0.78

Frame Id	Column Line	-Wind_Right2- Horz	Vert	--Wind_Long1- Horz	Vert	--Wind_Long2- Horz	Vert	-Seismic_Left Horz	Vert	Seismic_Right Horz	Vert	Seismic_Long1 Horz	Vert
1*	A	0.15	-0.30	0.40	-1.03	0.43	-0.63	0.00	0.05	0.00	-0.05	0.00	0.00
1*	B	0.28	-0.11	0.83	-0.42	0.74	-0.19	-1.09	-0.05	1.09	0.05	0.00	0.00
2*	A	0.24	-0.53	1.10	-2.29	1.16	-1.57	0.00	0.10	0.00	-0.10	0.00	0.00
2*	B	0.47	-0.19	2.14	-0.80	1.99	-0.34	-2.46	-0.10	2.46	0.10	0.00	0.00
3*	A	0.34	-0.83	2.01	-4.47	2.09	-3.29	0.00	0.19	0.00	-0.19	0.00	-3.99
3*	B	0.70	-0.32	3.82	-1.32	3.57	-0.57	-4.51	-0.19	4.51	0.19	0.00	0.00
4*	A	0.19	-0.40	0.59	-1.55	0.63	-0.97	0.00	0.06	0.00	-0.06	0.00	0.00
4*	B	0.38	-0.14	1.24	-0.62	1.12	-0.26	-1.51	-0.06	1.51	0.06	0.00	0.00

Frame Id	Column Line	Seismic_Long2 Horz	Vert
1*	A	0.00	0.00
1*	B	0.00	0.00
2*	A	0.00	0.00
2*	B	0.00	0.00
3*	A	0.00	3.99
3*	B	0.00	0.00
4*	A	0.00	0.00
4*	B	0.00	0.00

1* Frame lines: 2
2* Frame lines: 3
3* Frame lines: 4 5
4* Frame lines: 6

4

ENDWALL COLUMN: BASIC COLUMN REACTIONS (k)

Frm Line	Col Line	Dead Vert	Wind Press Horz	Wind Suct Horz	Seis Long Horz
6	B	0.18	-0.96	1.05	0.10

ENDWALL COLUMN: MAXIMUM REACTIONS

Column_Reactions(k)

Frm Line	Col Line	Load Id	Horz	Vert
6	B	13	0.63	0.11
		14	-0.57	0.11
		15	0.00	0.21

FRAME LINES: 2 3 4 5 6

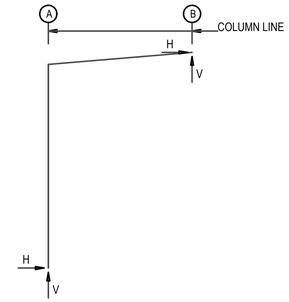

RIGID FRAME: MAXIMUM REACTIONS

Column_Reactions(k)

Frm Id	Col Line	Load Id	Horz	Vert
1*	A	1	0.11	1.60
		4	0.29	1.14
		6	-0.37	0.00
		7	0.25	-0.30
1*	B	1	-0.11	0.71
		5	-0.12	-0.31
		9	-0.82	0.33
		11	0.76	0.06

1* Frame lines: 2

RIGID FRAME: MAXIMUM REACTIONS

Column_Reactions(k)

Frm Id	Col Line	Load Id	Horz	Vert
2*	A	1	0.22	3.37
		3	0.71	-0.46
		6	-0.76	-0.19
		7	0.67	-1.09
2*	B	1	-0.22	2.03
		5	-0.20	-0.71
		9	-1.83	0.90
		11	1.71	0.14

2* Frame lines: 3

RIGID FRAME: MAXIMUM REACTIONS

Column_Reactions(k)

Frm Id	Col Line	Load Id	Horz	Vert
3*	A	2	1.29	-1.32
		6	-1.30	-0.35
		10	0.36	7.45
		12	0.01	-2.55
3*	B	1	-0.39	3.60
		5	-0.28	-1.20
		9	-3.35	1.61
		11	3.15	0.24

3* Frame lines: 4 5

BUILDING C00416

DEVELOPED BY:

ClearSpan
ENGINEERING SERVICES & PRODUCTS CO.
1440 18TH AVENUE SW
DYERSVILLE, IA 52040
P:563.875.6113
WWW.ESAPCO.COM
WWW.CLEARSPAN.COM

ORDER #: 7878201
CUSTOMER #: 9108797

PROFESSIONAL SEAL

REV.	DESCRIPTION	CK'D	APP	DATE
5	SEISMIC DESIGN CAT. UPDATES DWG.–NO.C2			2/3
4	UPDATED PER CHANGER ORDER #3			1/23
3	BUILDING SITE CLASS UPDATES DWG.–NO.C2			8/7
2	UPDATED TITLE BLOCK AND BASE PLATE			5/21
1	BUILDING "A" BASE PLATE UPDATES			3/7

PUBLIC WORKS DEPARTMENT ENGINEERING DIVISION
CITY OF SAN BUENAVENTURA

FIRE STATION NO. 7

ANCHOR BOLT REACTIONS BUILDING C

DRN. BY: LJO | DES. BY: XXX | CK'D. BY: XXX

PRINCIPAL ENGINEER — DATE 5 May 2026

CITY ENGINEER — DATE 5/7/2026

SPEC. NUMBER 2025-010 | PROJECT NUMBER FA11-1061

March 27, 2026 | SHEET 42 OF 151 | DWG. NO. 2025-D-010

FOR REFERENCE ONLY

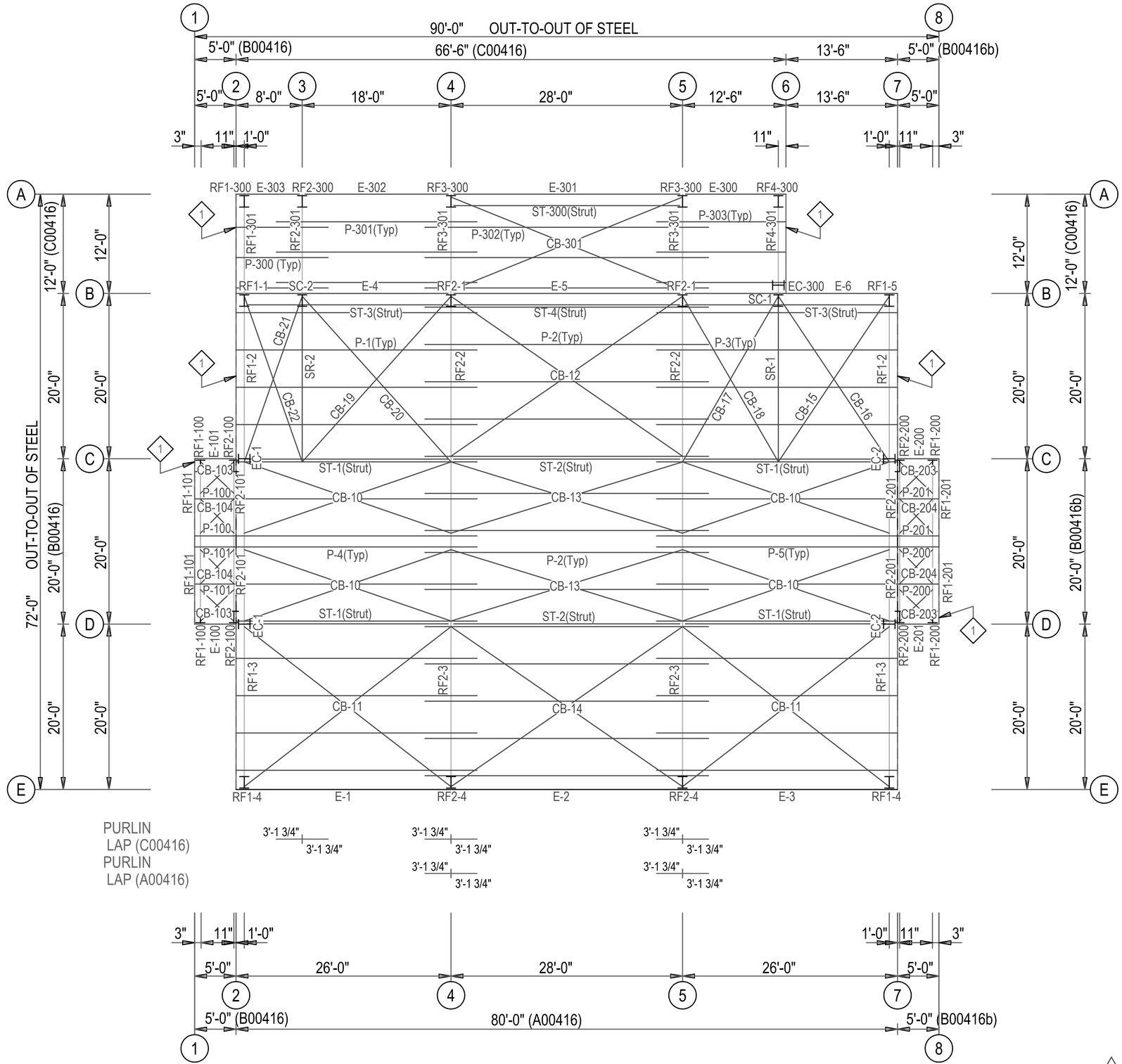

ROOF FRAMING PLAN

MEMBER TABLE ROOF PLAN		
MARK	PART	LENGTH
A00416		
SR-1	W8X10	18'-6 1/2"
SR-2	W8X10	18'-5 1/2"
P-1	Z82512	29'-1 1/2"
P-2	Z82512	34'-3 1/2"
P-3	Z82512	29'-1 1/2"
P-4	Z82512	29'-1 1/2"
P-5	Z82512	29'-1 1/2"
E-1	08432DU1	25'-11 1/2"
E-2	08532DU1	27'-11 1/2"
E-3	08432DU1	25'-11 1/2"
E-4	08434DU1	25'-11 1/2"
E-5	08532DU1	27'-11 1/2"
E-6	08434DU1	25'-11 1/2"
ST-1	T4X2	24'-5 3/4"
ST-2	T5X2	27'-5 3/4"
ST-3	T3X2	24'-5 3/4"
ST-4	T5X2	27'-5 3/4"
CB-10	BR1/2	26'-8 3/4"
CB-11	BR3/4	31'-3 1/4"
CB-12	BR1/2	33'-9"
CB-13	BR1/2	29'-7 1/4"
CB-14	BR5/8	33'-9"
CB-15	BR3/4	23'-8 3/4"
CB-16	BR3/4	22'-9 3/4"
CB-17	BR3/4	21'-9"
CB-18	BR3/4	22'-8 1/2"
CB-19	BR3/4	26'-7 1/2"
CB-20	BR3/4	25'-9 1/4"
CB-21	BR3/4	19'-6 3/4"
CB-22	BR3/4	20'-8 1/2"
B00416		
P-100	Z82516	4'-11 1/2"
P-101	Z82516	4'-11 1/2"
E-100	08434DU1	4'-11 1/2"
E-101	08434DU1	4'-11 1/2"
CB-103	BR1/2	4'-7"
CB-104	BR1/2	5'-7 3/4"
B00416b		
P-200	Z82516	4'-11 1/2"
P-201	Z82516	4'-11 1/2"
E-200	08434DU1	4'-11 1/2"
E-201	08434DU1	4'-11 1/2"
CB-203	BR1/2	4'-7"
CB-204	BR1/2	5'-7 3/4"
C00416		
P-300	Z82516	11'-1 1/2"
P-301	Z82514	24'-3 1/2"
P-302	Z82514	34'-3 1/2"
P-303	Z82514	15'-7 1/2"
E-300	08434DU1	12'-5 1/2"
E-301	08554DU1	27'-11 1/2"
E-302	08434DU1	17'-11 1/2"
E-303	08434DU1	7'-11 1/2"
ST-300	T5X2	27'-5 3/4"
CB-301	BR1/2	29'-11 3/4"

ANGLE TABLE ROOF PLAN		
◇ID	MARK	LENGTH
1	L4x2	20'-0"

DEVELOPED BY:

ClearSpan

ENGINEERING SERVICES & PRODUCTS CO.
1440 18TH AVENUE SW
DYERSVILLE, IA 52040
P:563.875.6113
WWW.ESAPCO.COM
WWW.CLEARSPAN.COM

ORDER #: 7878201

CUSTOMER #: 9108797

PROFESSIONAL SEAL

REV.	DESCRIPTION	CK'D	APP	DATE
5	SEISMIC DESIGN CAT. UPDATES DWG.–NO.C2			2/3
4	UPDATED PER CHANGER ORDER #3			1/23
3	BUILDING SITE CLASS UPDATES DWG.–NO.C2			8/7
2	UPDATED TITLE BLOCK AND BASE PLATE			5/21
1	BUILDING "A" BASE PLATE UPDATES			3/7

PUBLIC WORKS DEPARTMENT ENGINEERING DIVISION
CITY OF SAN BUENAVENTURA

FIRE STATION NO. 7

ROOF PLAN

DRN. BY: LJO | DES. BY: XXX | CK'D. BY: XXX

PRINCIPAL ENGINEER — DATE: 5 May 2026

CITY ENGINEER — DATE: 5/7/2026

SPEC. NUMBER 2025-010 | PROJECT NUMBER FA11-1061

March 27, 2026 | SHEET 43 OF 151 | DWG. NO. 2025-D-010

FOR REFERENCE ONLY

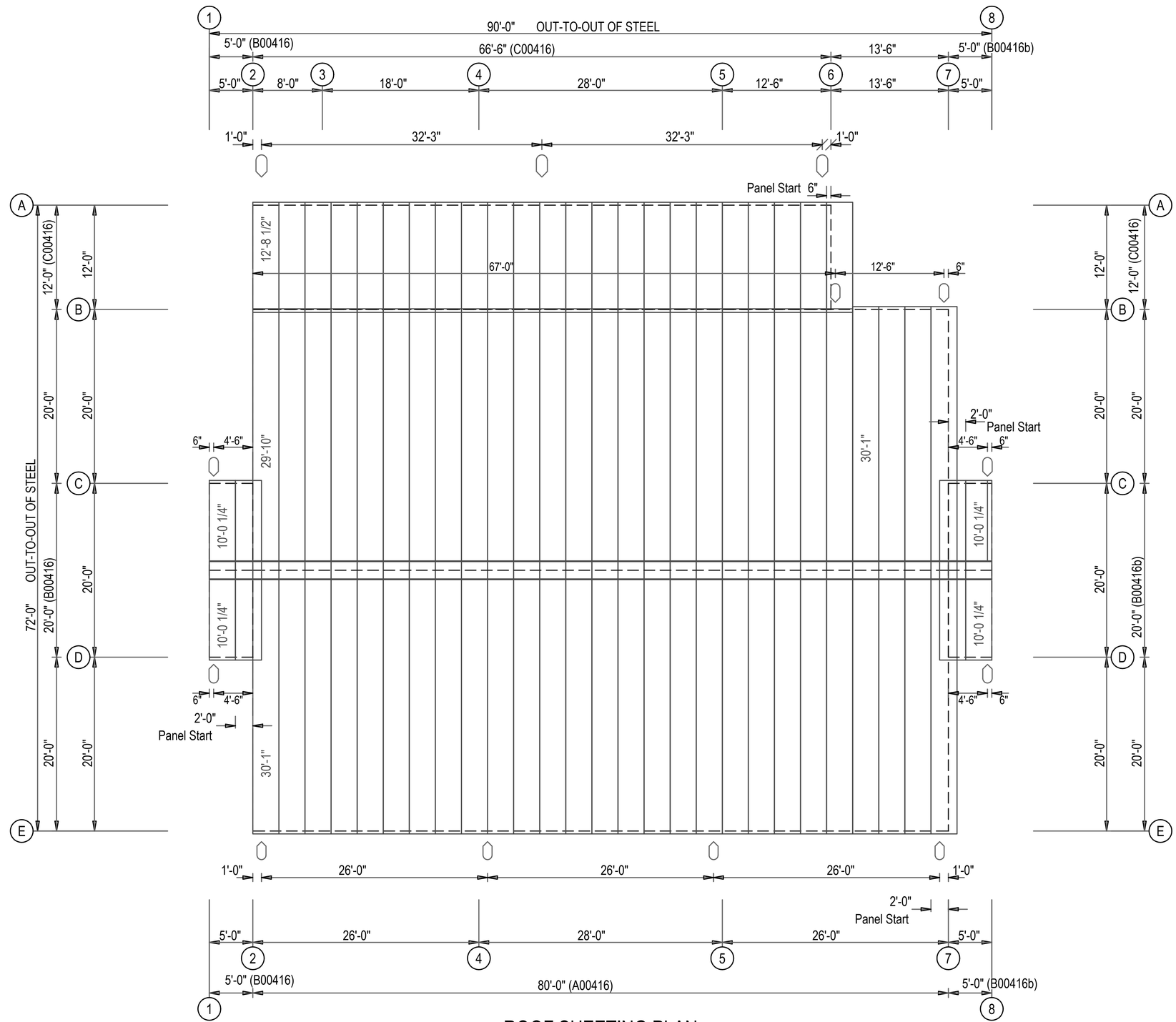

ROOF SHEETING PLAN

PANELS: 26 Ga. RL -

DEVELOPED BY:

ClearSpan

ENGINEERING SERVICES & PRODUCTS CO.
1440 18TH AVENUE SW
DYERSVILLE, IA 52040
P: 563.875.6113
WWW.ESAPCO.COM
WWW.CLEARSPAN.COM

ORDER #:	7878201
CUSTOMER #:	9108797

PROFESSIONAL SEAL

REV.	DESCRIPTION	CK'D	APP	DATE
5	SEISMIC DESIGN CAT. UPDATES DWG.–NO.C2			2/3
4	UPDATED PER CHANGER ORDER #3			1/23
3	BUILDING SITE CLASS UPDATES DWG.–NO.C2			8/7
2	UPDATED TITLE BLOCK AND BASE PLATE			5/21
1	BUILDING "A" BASE PLATE UPDATES			3/7

PUBLIC WORKS DEPARTMENT ENGINEERING DIVISION
CITY OF SAN BUENAVENTURA

FIRE STATION NO. 7

ROOF SHEETING PLAN

DRN. BY: LJO	DES. BY: XXX	CK'D. BY: XXX

PRINCIPAL ENGINEER — DATE: 5 May 2026

CITY ENGINEER — DATE: 5/7/2026

SPEC. NUMBER	2025-010	PROJECT NUMBER	FA11-1061
March 27, 2026	SHEET 44 OF 151	DWG. NO.	2025-D-010

FOR REFERENCE ONLY

SPLICE BOLT TABLE						
Mark	Qty Top	Bot	Int	Type	Dia	Length
SP-1	4	4	0	A325	3/4"	2"
SP-2	4	4	0	A325	3/4"	2"

STIFFENER TABLE				
Mark	Stiff Mark	Plate Size Width	Thick	Length
RF1-100	ST1	2.880	0.250	9.035

FLANGE BRACES: FBxx (1 or 2)
(1) One Side; (2) Two Sides
A - FB2X1/8

MEMBER SIZE TABLE			
MARK	MEMBER	LENGTH	WEIGHT
RF1-100	W10X12	19'-0 5/8"	272
RF1-101	W10X12	8'-6 1/2"	138

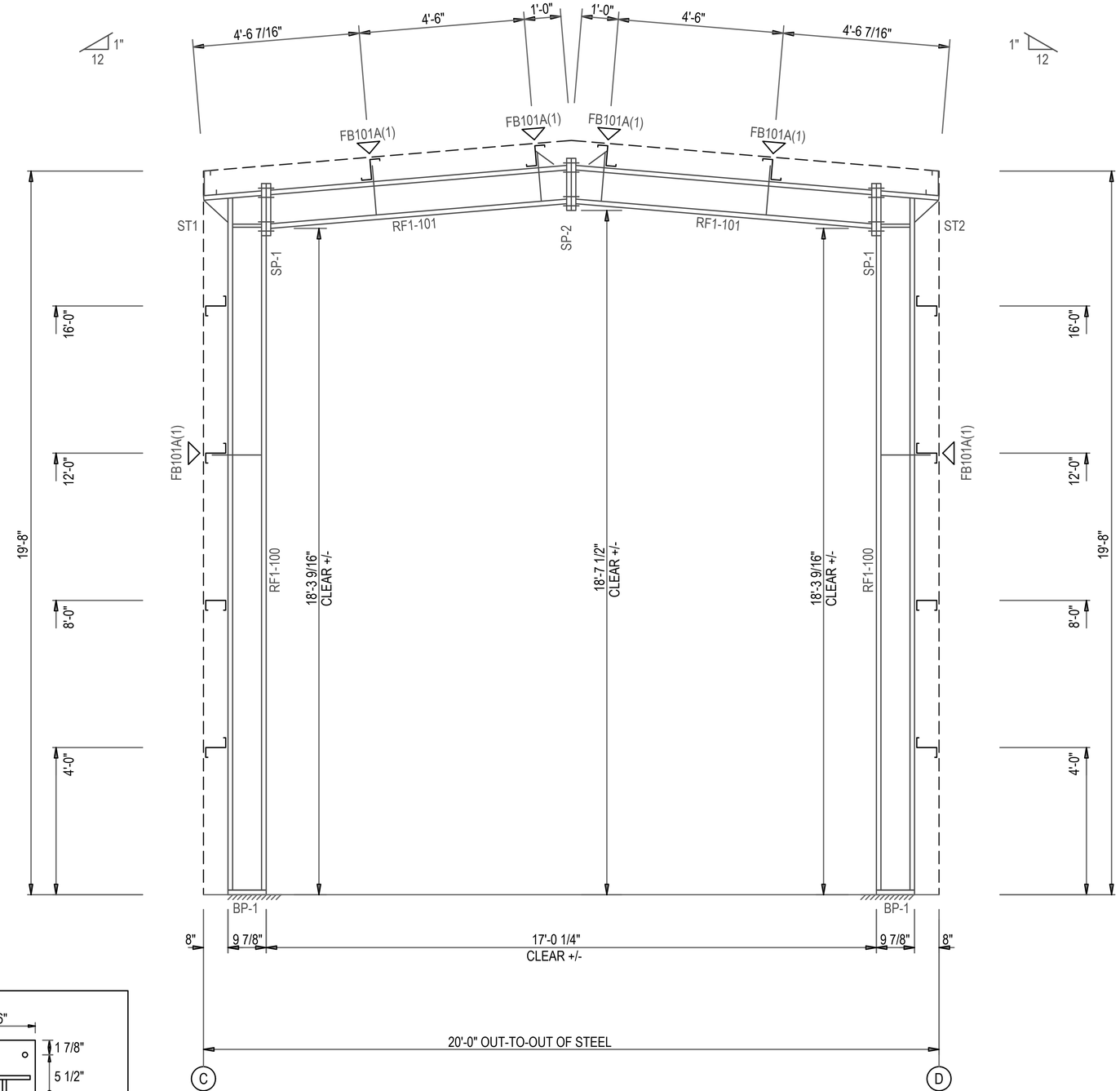

RIGID FRAME ELEVATION: FRAME LINE 1

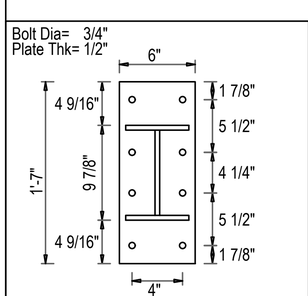

SP-1

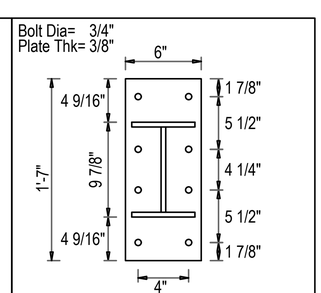

SP-2

DEVELOPED BY:

ClearSpan

ENGINEERING SERVICES & PRODUCTS CO.
1440 18TH AVENUE SW
DYERSVILLE, IA 52040
P:563.875.6113
WWW.ESAPCO.COM
WWW.CLEARSPAN.COM

ORDER #: 7878201

CUSTOMER #: 9108797

PROFESSIONAL SEAL

REV.	DESCRIPTION	CK'D	APP	DATE
5	SEISMIC DESIGN CAT. UPDATES DWG.-NO.C2			2/3
4	UPDATED PER CHANGER ORDER #3			1/23
3	BUILDING SITE CLASS UPDATES DWG.-NO.C2			8/7
2	UPDATED TITLE BLOCK AND BASE PLATE			5/21
1	BUILDING "A" BASE PLATE UPDATES			3/7

PUBLIC WORKS DEPARTMENT ENGINEERING DIVISION
CITY OF SAN BUENAVENTURA

FIRE STATION NO. 7

RIGID FRAME ELEVATION

DRN. BY: LJO | DES. BY: XXX | CK'D. BY: XXX

PRINCIPAL ENGINEER — DATE: 5 May 2026

CITY ENGINEER — DATE: 5/7/2026

SPEC. NUMBER 2025-010 | PROJECT NUMBER FA11-1061

March 27, 2026 | SHEET 45 OF 151 | DWG. NO. 2025-D-010

FOR REFERENCE ONLY

SPLICE BOLT TABLE						
Mark	Qty Top	Bot	Int	Type	Dia	Length
SP-1	4	4	0	A325	3/4"	2"
SP-2	4	4	0	A325	3/4"	2"

STIFFENER TABLE				
Mark	Stiff Mark	Plate Size Width	Thick	Length
RF2-100	ST1	2.880	0.250	9.035

FLANGE BRACES: FBxx (1 or 2)
(1) One Side; (2) Two Sides
A - FB2X1/8

MEMBER SIZE TABLE			
MARK	MEMBER	LENGTH	WEIGHT
RF2-100	W10X12	19'-0 5/8"	271
RF2-101	W8X10	8'-6 1/2"	118

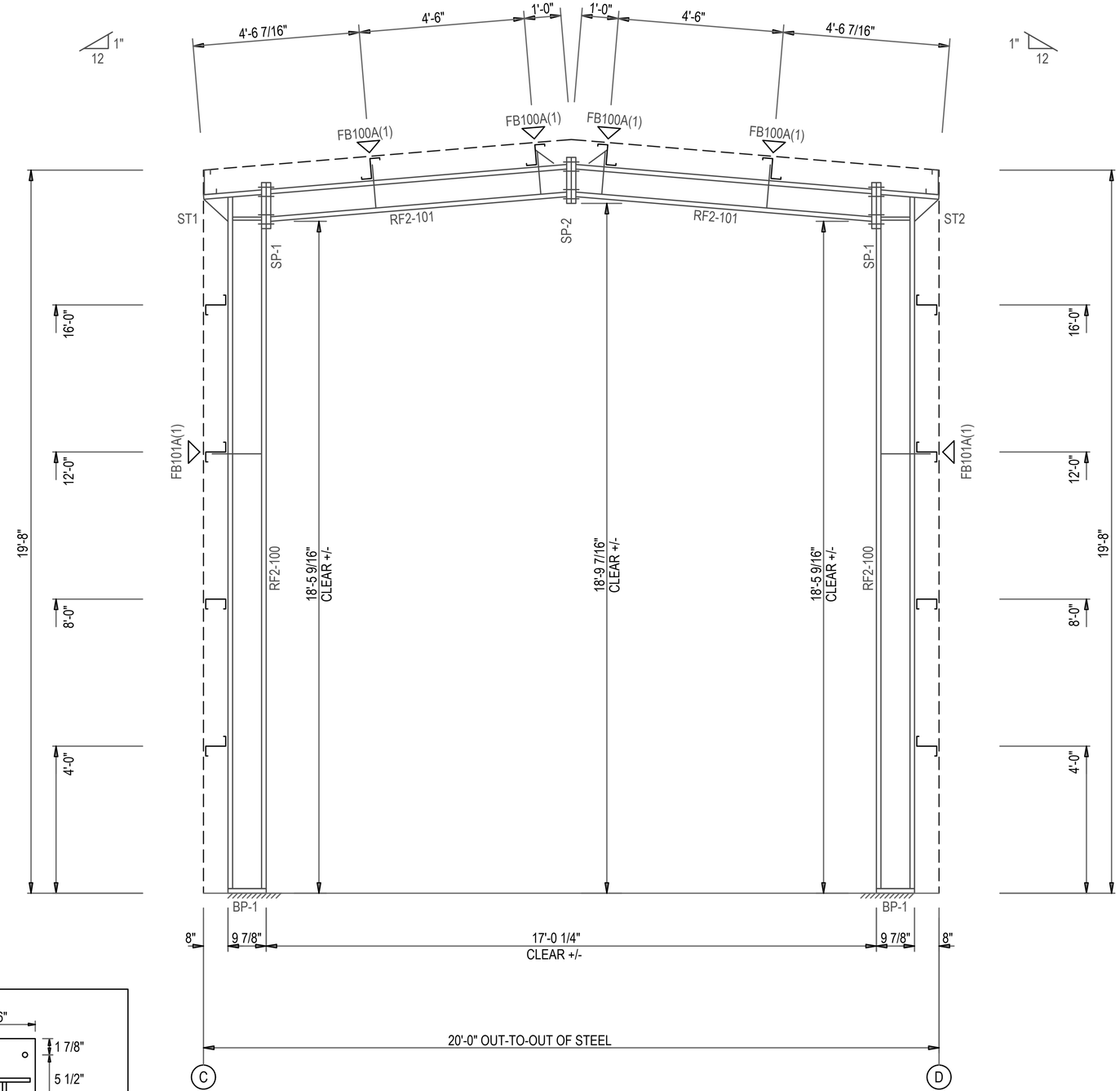

RIGID FRAME ELEVATION: FRAME LINE 2

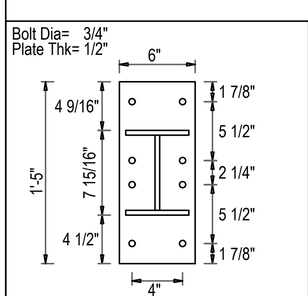

SP-1

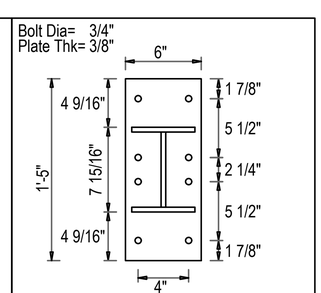

SP-2

DEVELOPED BY:

ClearSpan

ENGINEERING SERVICES & PRODUCTS CO.
1440 18TH AVENUE SW
DYERSVILLE, IA 52040
P:563.875.6113
WWW.ESAPCO.COM
WWW.CLEARSPAN.COM

ORDER #: 7878201

CUSTOMER #: 9108797

PROFESSIONAL SEAL

REV.	DESCRIPTION	CK'D	APP	DATE
5	SEISMIC DESIGN CAT. UPDATES DWG.–NO.C2			2/3
4	UPDATED PER CHANGER ORDER #3			1/23
3	BUILDING SITE CLASS UPDATES DWG.–NO.C2			8/7
2	UPDATED TITLE BLOCK AND BASE PLATE			5/21
1	BUILDING "A" BASE PLATE UPDATES			3/7

PUBLIC WORKS DEPARTMENT ENGINEERING DIVISION
CITY OF SAN BUENAVENTURA

FIRE STATION NO. 7

RIGID FRAME ELEVATION

DRN. BY: LJO	DES. BY: XXX	CK'D. BY: XXX

PRINCIPAL ENGINEER — DATE: 5 May 2026

CITY ENGINEER — DATE: 5/7/2026

SPEC. NUMBER 2025-010 | PROJECT NUMBER FA11-1061

March 27, 2026 | SHEET 46 OF 151 | DWG. NO. 2025-D-010

FOR REFERENCE ONLY

SPLICE BOLT TABLE						
Mark	Qty Top	Bot	Int	Type	Dia	Length
SP-1	4	4	4	A325	1"	3"
SP-2	4	4	0	A325	3/4"	2"
SP-1	4	4	0	A325	3/4"	2"
SP-2	4	0	0	A325	3/4"	2"

STIFFENER TABLE				
Mark	Stiff Mark	Plate Size Width	Thick	Length
RF1-1	ST1	3.880	0.250	26.57
RF1-4	ST2	3.880	0.250	19.69
RF1-300	ST1	2.880	0.250	9.340

MEMBER TABLE							
Mark	Weight	Length	Web Depth Start/End	Web Plate Thick	Web Plate Length	Outside Flange W x Thk x Length	Inside Flange W x Thk x Length
RF1-1	949 △4	17'-4 5/8"	16.0/27.0	0.250	17'-5 7/16" △4	8 x 1/2" x 17'-3 3/8" 8 x 1/4" x 2'-8"	8 x 1/2" x 14'-3"
RF1-2	750	27'-4 1/8"	34.0/21.0 21.0/14.0	0.188 0.188	7'-3" 20'-0"	6 x 1/4" x 27'-3"	6 x 1/4" x 7'-3 15/16" 6 x 1/4" x 19'-10 7/8"
RF1-3	750	27'-4 1/8"	14.0/21.0 21.0/34.0	0.188 0.188	20'-0" 7'-3"	6 x 1/4" x 27'-3"	6 x 1/4" x 19'-10 7/8" 6 x 1/4" x 7'-3 15/16"
RF1-4	922 △4	17'-4 5/8"	27.0/16.0	0.250	17'-5 7/16" △4	8 x 1/4" x 2'-8 3/8" 8 x 1/2" x 17'-3 3/8"	8 x 1/2" x 14'-3"
RF1-300	385	16'-4 5/8"	W10X22				
RF1-301	131	10'-6 1/4"	W8X10				

FLANGE BRACES: FBxx (1 or 2)
(1) One Side; (2) Two Sides
A - FB2X1/8

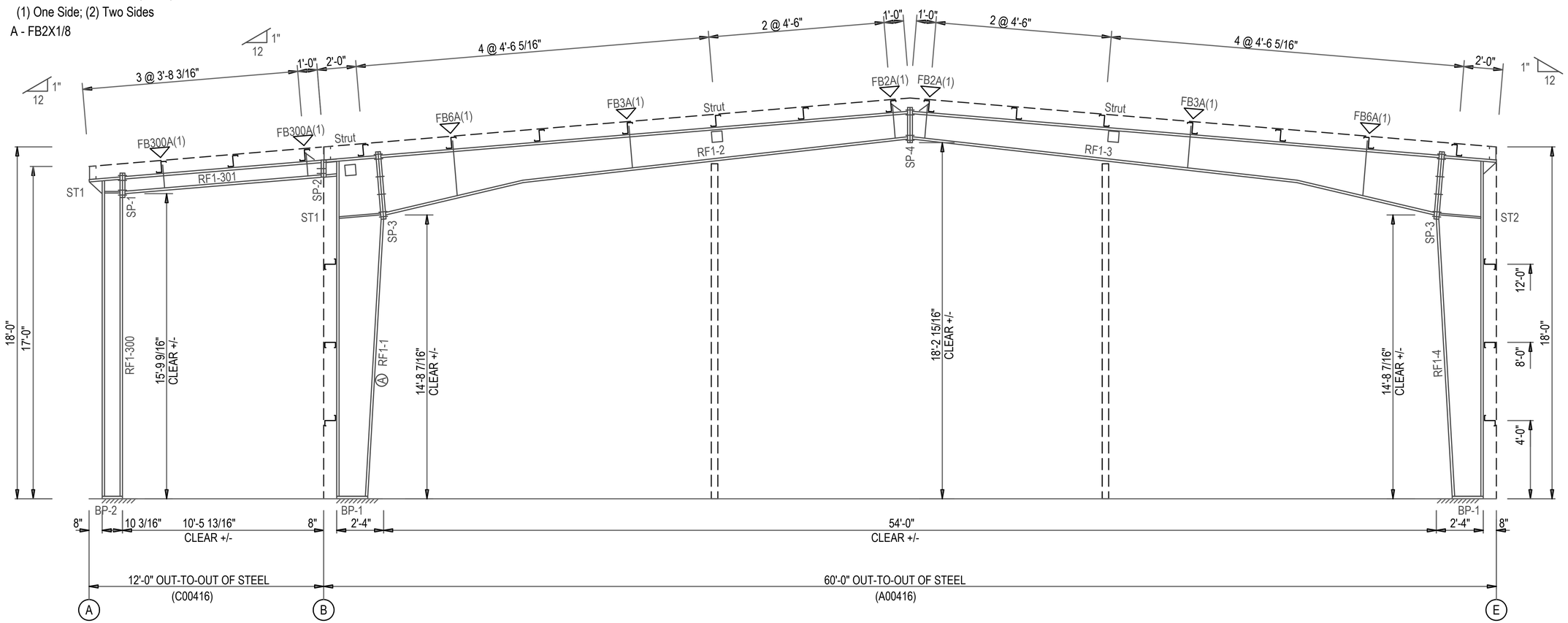

RIGID FRAME ELEVATION: FRAME LINE 2

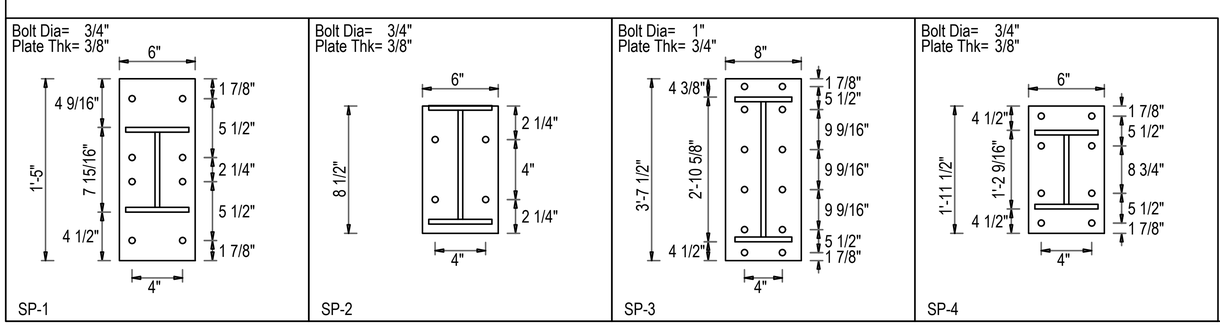

DEVELOPED BY:
ClearSpan
ENGINEERING SERVICES & PRODUCTS CO.
1440 18TH AVENUE SW
DYERSVILLE, IA 52040
P:563.875.6113
WWW.ESAPCO.COM
WWW.CLEARSPAN.COM

ORDER #: 7878201
CUSTOMER #: 9108797

PROFESSIONAL SEAL

REV.	DESCRIPTION	CK'D	APP	DATE
5	SEISMIC DESIGN CAT. UPDATES DWG.–NO.C2			2/3
4	UPDATED PER CHANGER ORDER #3			1/23
3	BUILDING SITE CLASS UPDATES DWG.–NO.C2			8/7
2	UPDATED TITLE BLOCK AND BASE PLATE			5/21
1	BUILDING "A" BASE PLATE UPDATES			3/7

PUBLIC WORKS DEPARTMENT ENGINEERING DIVISION
CITY OF SAN BUENAVENTURA
FIRE STATION NO. 7
RIGID FRAME ELEVATION

DRN. BY: LJO | DES. BY: XXX | CK'D. BY: XXX

PRINCIPAL ENGINEER — DATE 5 May 2026
CITY ENGINEER — DATE 5/7/2026

SPEC. NUMBER 2025-010 | PROJECT NUMBER FA11-1061
March 27, 2026 | SHEET 47 OF 151 | DWG. NO. 2025-D-010

FOR REFERENCE ONLY

SPLICE BOLT TABLE

Mark	Qty Top	Bot	Int	Type	Dia	Length
SP-1	4	4	4	A325	1"	3 1/2"
SP-2	4	4	2	A325	3/4"	2"
SP-1	4	4	0	A325	3/4"	2"
SP-2	4	0	0	A325	3/4"	2"

STIFFENER TABLE

Mark	Stiff Mark	Plate Size Width	Thick	Length
RF2-1	ST1	3.880	0.250	35.60
RF2-4	ST2	3.880	0.250	27.84
RF3-300	ST1	2.880	0.250	9.160

MEMBER TABLE

Mark	Weight	Length	Web Depth Start/End	Web Plate Thick	Web Plate Length	Outside Flange W x Thk x Length	Inside Flange W x Thk x Length
RF2-1	1165	17'-4 5/8"	16.8/36.0	0.250	17'-6 9/16"	8 x 5/8" x 17'-3 13/16" 8 x 5/16" x 3'-4 13/16"	8 x 5/8" x 14'-0 11/16"
RF2-2	979	26'-7 1/16"	38.0/21.0 21.0/19.0	0.188 0.188	6'-5 9/16" 20'-0"	6 x 5/16" x 26'-5 9/16"	6 x 1/2" x 6'-7 3/8" 6 x 1/2" x 19'-10 5/16"
RF2-3	979	26'-7 1/16"	19.0/21.0 21.0/38.0	0.188 0.188	20'-0" 6'-5 9/16"	6 x 5/16" x 26'-5 9/16"	6 x 1/2" x 19'-10 5/16" 6 x 1/2" x 6'-7 3/8"
RF2-4	1143 △4	17'-4 5/8"	36.0/16.8	0.250	17'-6 9/16"	8 x 5/16" x 3'-5 3/16" 8 x 5/8" x 17'-3 13/16"	8 x 5/8" x 14'-0 11/16"
RF3-300	253	16'-4 5/8"	W10X12				
RF3-301	131	10'-6 9/16"	W8X10				

FLANGE BRACES: FBxx (1 or 2)
(1) One Side; (2) Two Sides
A - FB2X1/8

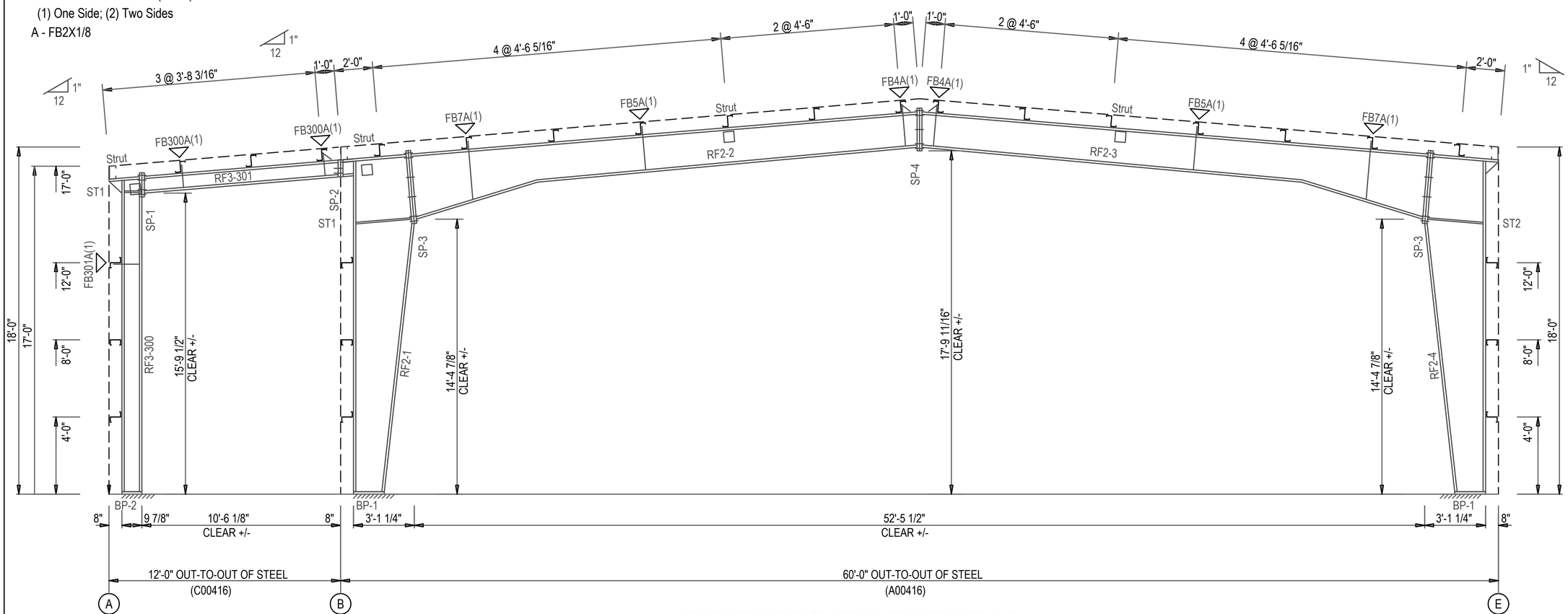

RIGID FRAME ELEVATION: FRAME LINE 4 5

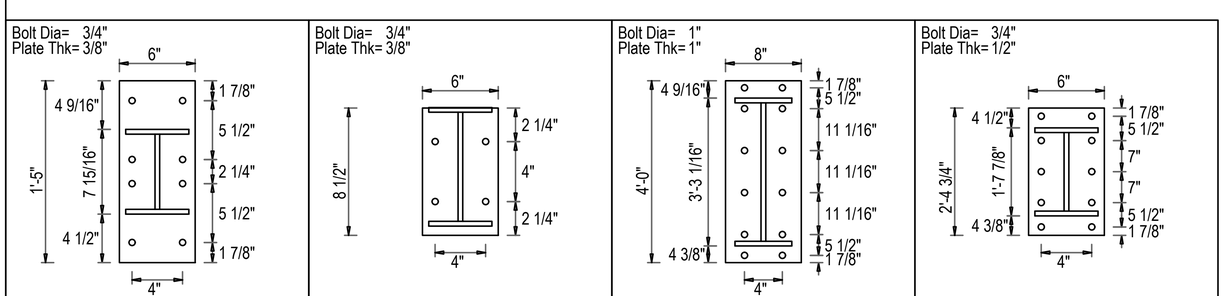

DEVELOPED BY:
ClearSpan
ENGINEERING SERVICES & PRODUCTS CO.
1440 18TH AVENUE SW
DYERSVILLE, IA 52040
P:563.875.6113
WWW.ESAPCO.COM
WWW.CLEARSPAN.COM

ORDER #: 7878201
CUSTOMER #: 9108797

PROFESSIONAL SEAL

REV.	DESCRIPTION	CK'D	APP	DATE
5	SEISMIC DESIGN CAT. UPDATES DWG.–NO.C2			2/3
4	UPDATED PER CHANGER ORDER #3			1/23
3	BUILDING SITE CLASS UPDATES DWG.–NO.C2			8/7
2	UPDATED TITLE BLOCK AND BASE PLATE			5/21
1	BUILDING "A" BASE PLATE UPDATES			3/7

PUBLIC WORKS DEPARTMENT ENGINEERING DIVISION
CITY OF SAN BUENAVENTURA
FIRE STATION NO. 7
RIGID FRAME ELEVATION

DRN. BY: LJO | DES. BY: XXX | CK'D. BY: XXX

PRINCIPAL ENGINEER — DATE: 5 May 2026
CITY ENGINEER — DATE: 5/7/2026

SPEC. NUMBER 2025-010 | PROJECT NUMBER FA11-1061
March 27, 2026 | SHEET 48 OF 151 | DWG. NO. 2025-D-010

FOR REFERENCE ONLY

SPLICE BOLT TABLE						
Mark	Qty Top	Bot	Int	Type	Dia	Length
SP-1	4	4	4	A325	1"	3"
SP-2	4	4	0	A325	3/4"	2"

STIFFENER TABLE				
Mark	Stiff Mark	Plate Size Width	Thick	Length
RF1-1	ST1	3.880	0.250	26.57
RF1-4	ST2	3.880	0.250	19.69

FLANGE BRACES: FBxx (1 or 2)
(1) One Side; (2) Two Sides
A - FB2X1/8

MEMBER TABLE							
Mark	Weight	Length	Web Depth Start/End	Web Plate Thick	Web Plate Length	Outside Flange W x Thk x Length	Inside Flange W x Thk x Length
RF1-1	939	17'-4 5/8"	16.0/27.0	0.250	17'-5 7/16" 4	8 x 1/2" x 17'-3 3/8" 8 x 1/4" x 2'-8"	8 x 1/2" x 14'-3"
RF1-2	741	27'-4 1/8"	34.0/21.0 21.0/14.0	0.188 0.188	7'-3" 20'-0"	6 x 1/4" x 27'-3"	6 x 1/4" x 7'-3 15/16" 6 x 1/4" x 19'-10 7/8"
RF1-3	741	27'-4 1/8"	14.0/21.0 21.0/34.0	0.188 0.188	20'-0" 7'-3"	6 x 1/4" x 27'-3"	6 x 1/4" x 19'-10 7/8" 6 x 1/4" x 7'-3 15/16"
RF1-4	921 4	17'-4 5/8"	27.0/16.0	0.250	17'-5 7/16" 4	8 x 1/4" x 2'-8 3/8" 8 x 1/2" x 17'-3 3/8"	8 x 1/2" x 14'-3"

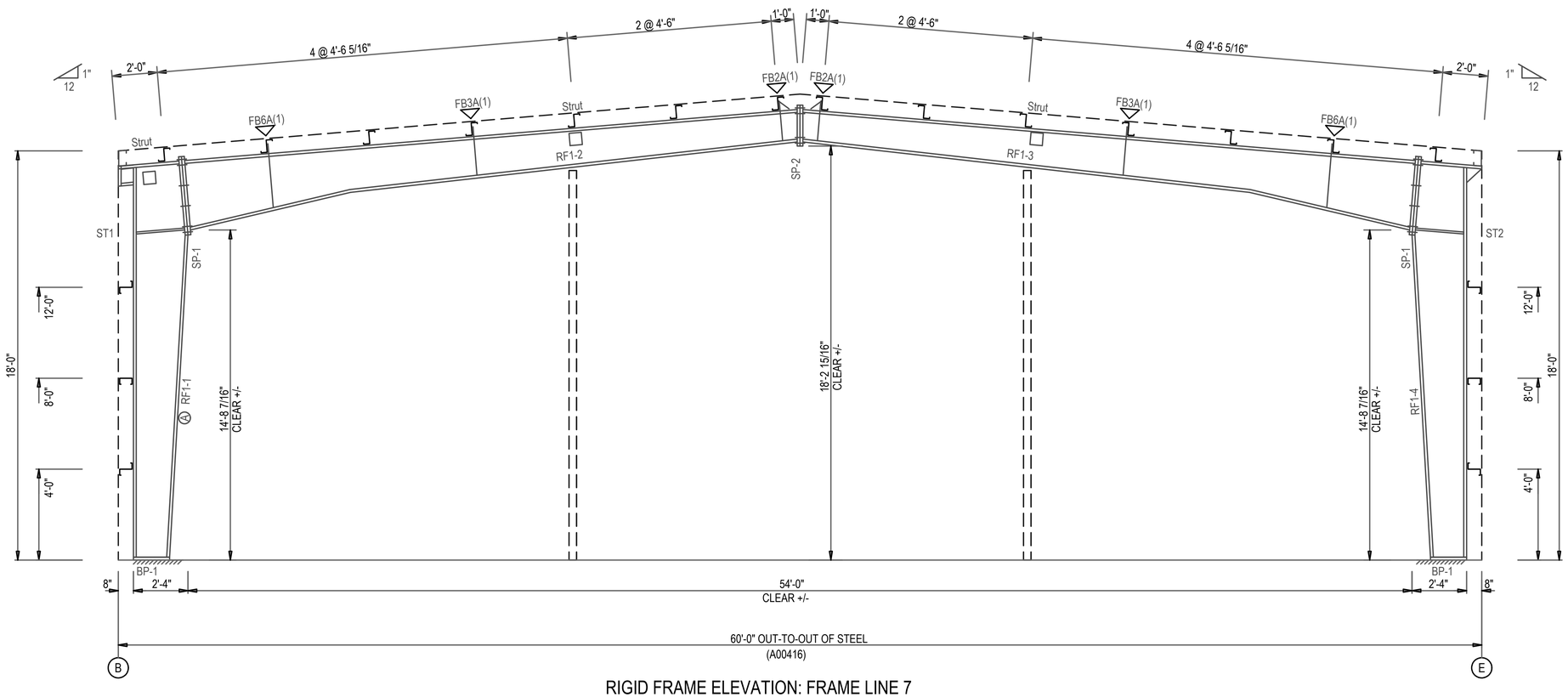

RIGID FRAME ELEVATION: FRAME LINE 7

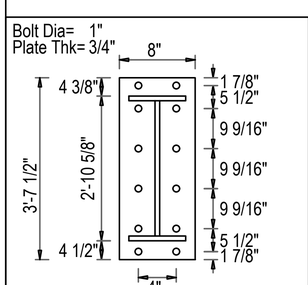

SP-1

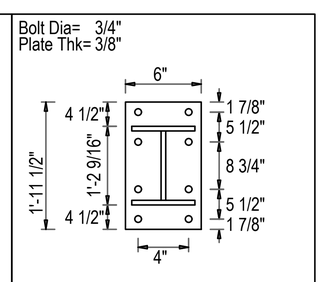

SP-2

DEVELOPED BY:

ClearSpan

ENGINEERING SERVICES & PRODUCTS CO.
1440 18TH AVENUE SW
DYERSVILLE, IA 52040
P:563.875.6113
WWW.ESAPCO.COM
WWW.CLEARSPAN.COM

ORDER #: 7878201

CUSTOMER #: 9108797

PROFESSIONAL SEAL

REV.	DESCRIPTION	CK'D	APP	DATE
5	SEISMIC DESIGN CAT. UPDATES DWG.-NO.C2			2/3
4	UPDATED PER CHANGER ORDER #3			1/23
3	BUILDING SITE CLASS UPDATES DWG.-NO.C2			8/7
2	UPDATED TITLE BLOCK AND BASE PLATE			5/21
1	BUILDING "A" BASE PLATE UPDATES			3/7

PUBLIC WORKS DEPARTMENT ENGINEERING DIVISION
CITY OF SAN BUENAVENTURA

FIRE STATION NO. 7

RIGID FRAME ELEVATION

DRN. BY: LJO | DES. BY: XXX | CK'D. BY: XXX

PRINCIPAL ENGINEER — DATE: 5 May 2026

CITY ENGINEER — DATE: 5/7/2026

SPEC. NUMBER 2025-010 | PROJECT NUMBER FA11-1061

March 27, 2026 | SHEET 49 OF 151 | DWG. NO. 2025-D-010

FOR REFERENCE ONLY

SPLICE BOLT TABLE						
Mark	Qty Top	Bot	Int	Type	Dia	Length
SP-1	4	4	0	A325	3/4"	2"
SP-2	4	4	0	A325	3/4"	2"

STIFFENER TABLE				
Mark	Stiff Mark	Plate Size Width	Thick	Length
RF2-200	ST1	2.880	0.250	9.035

FLANGE BRACES: FBxx (1 or 2)
(1) One Side; (2) Two Sides
A - FB2X1/8

MEMBER SIZE TABLE			
MARK	MEMBER	LENGTH	WEIGHT
RF2-200	W10X12	19'-0 5/8"	271
RF2-201	W8X10	8'-6 1/2"	118

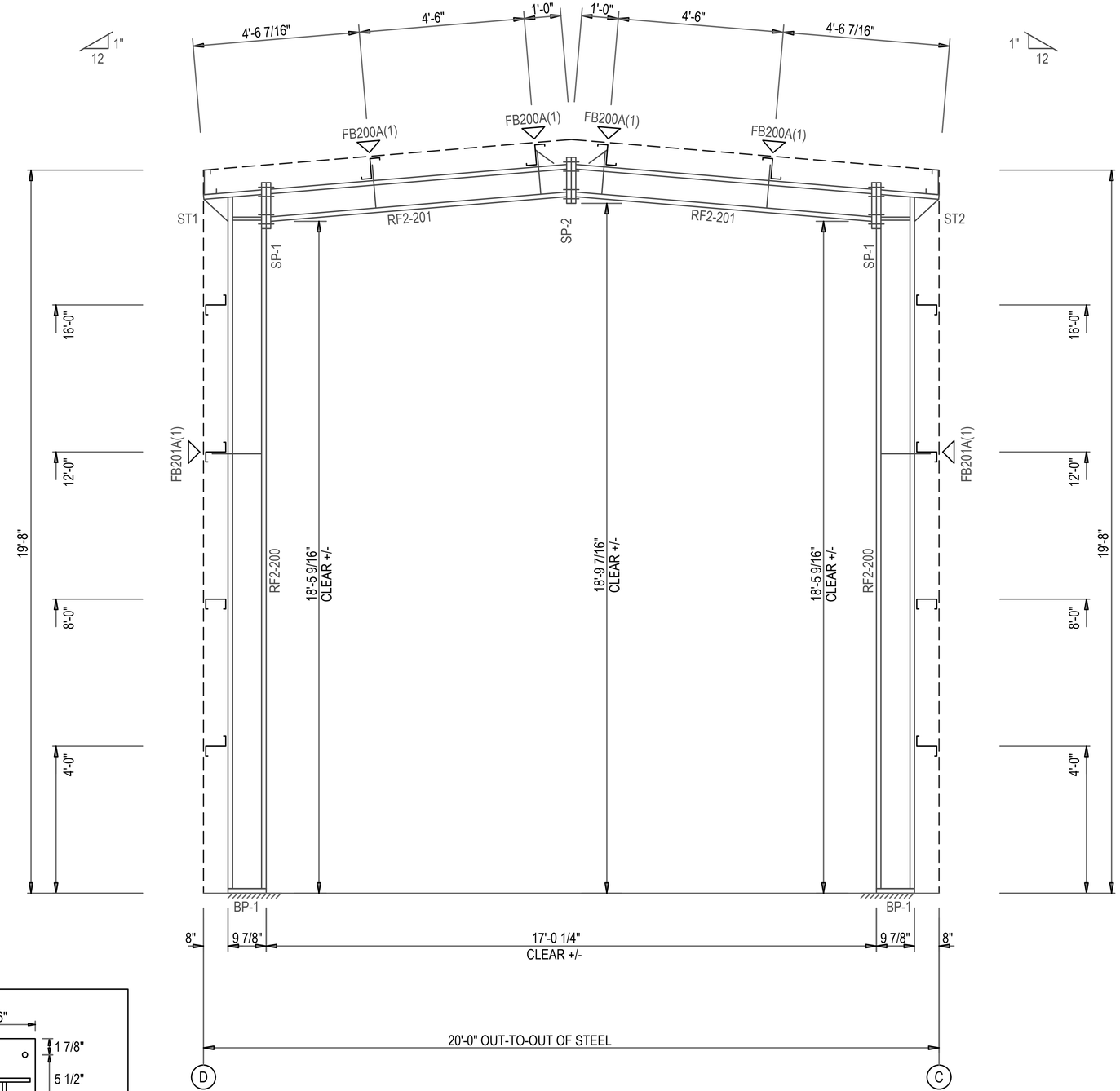

RIGID FRAME ELEVATION: FRAME LINE 7

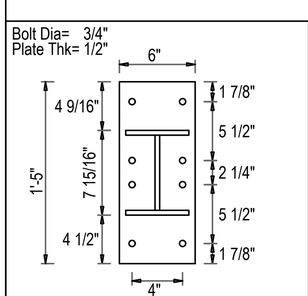

SP-1

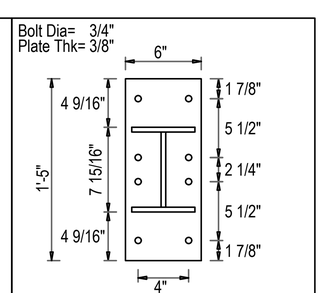

SP-2

DEVELOPED BY:

ClearSpan

ENGINEERING SERVICES & PRODUCTS CO.
1440 18TH AVENUE SW
DYERSVILLE, IA 52040
P:563.875.6113
WWW.ESAPCO.COM
WWW.CLEARSPAN.COM

ORDER #: 7878201

CUSTOMER #: 9108797

PROFESSIONAL SEAL

REV.	DESCRIPTION	CK'D	APP	DATE
5	SEISMIC DESIGN CAT. UPDATES DWG.-NO.C2			2/3
4	UPDATED PER CHANGER ORDER #3			1/23
3	BUILDING SITE CLASS UPDATES DWG.-NO.C2			8/7
2	UPDATED TITLE BLOCK AND BASE PLATE			5/21
1	BUILDING "A" BASE PLATE UPDATES			3/7

PUBLIC WORKS DEPARTMENT ENGINEERING DIVISION
CITY OF SAN BUENAVENTURA

FIRE STATION NO. 7

RIGID FRAME ELEVATION

DRN. BY: LJO | DES. BY: XXX | CK'D. BY: XXX

PRINCIPAL ENGINEER — DATE: 5 May 2026

CITY ENGINEER — DATE: 5/7/2026

SPEC. NUMBER 2025-010 | PROJECT NUMBER FA11-1061

March 27, 2026 | SHEET 50 OF 151 | DWG. NO. 2025-D-010

FOR REFERENCE ONLY

SPLICE BOLT TABLE						
Mark	Qty Top	Bot	Int	Type	Dia	Length
SP-1	4	4	0	A325	3/4"	2"
SP-2	4	4	0	A325	3/4"	2"

STIFFENER TABLE				
Mark	Stiff Mark	Plate Size Width	Thick	Length
RF1-200	ST1	2.880	0.250	9.035

FLANGE BRACES: FBxx (1 or 2)
(1) One Side; (2) Two Sides
A - FB2X1/8

MEMBER SIZE TABLE			
MARK	MEMBER	LENGTH	WEIGHT
RF1-200	W10X12	19'-0 5/8"	272
RF1-201	W10X12	8'-6 1/2"	138

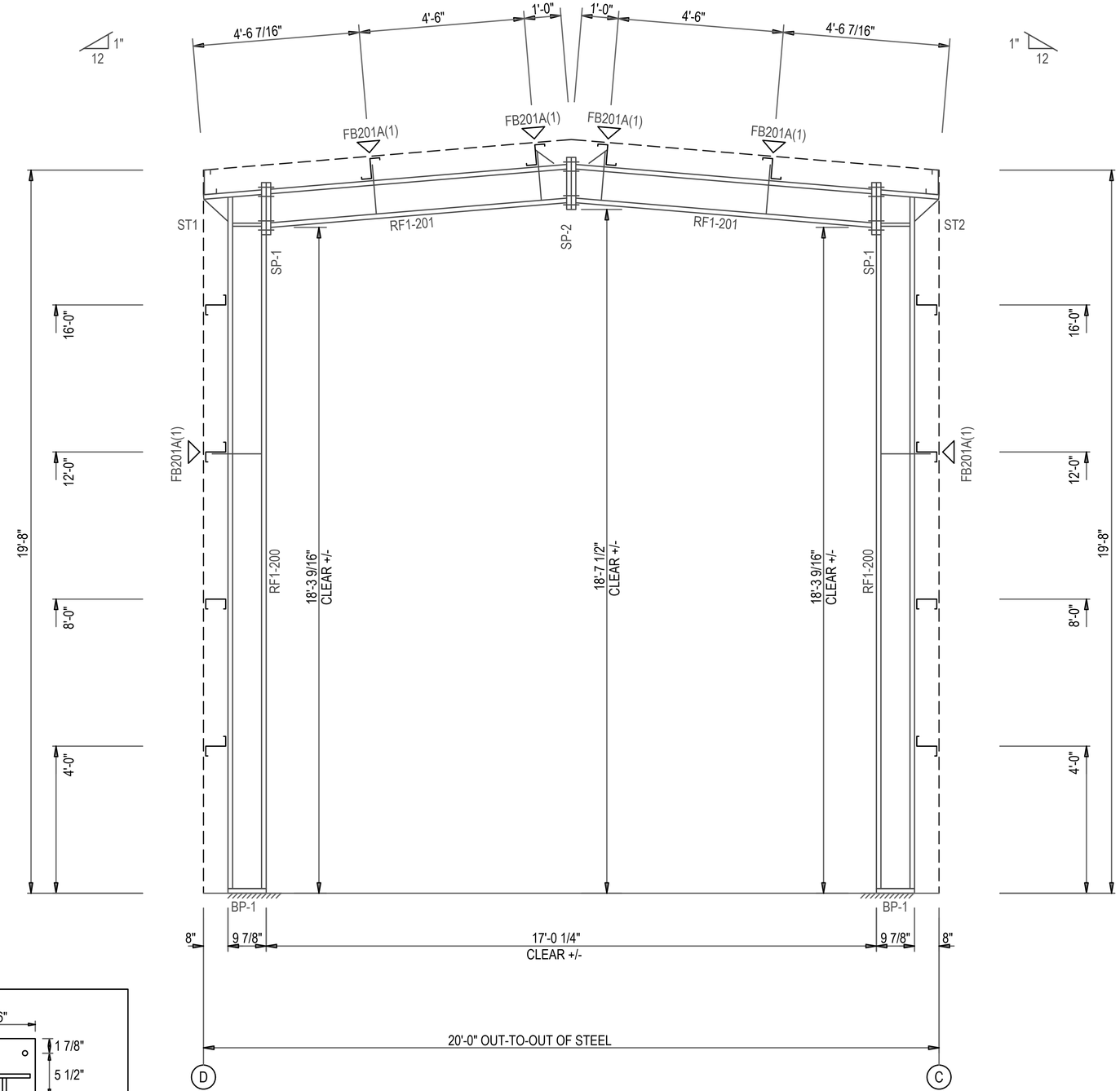

RIGID FRAME ELEVATION: FRAME LINE 8

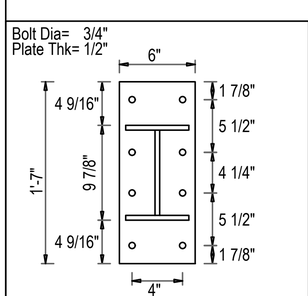

SP-1

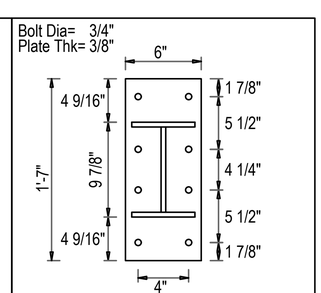

SP-2

DEVELOPED BY:

ClearSpan

ENGINEERING SERVICES & PRODUCTS CO.
1440 18TH AVENUE SW
DYERSVILLE, IA 52040
P:563.875.6113
WWW.ESAPCO.COM
WWW.CLEARSPAN.COM

ORDER #: 7878201

CUSTOMER #: 9108797

PROFESSIONAL SEAL

REV.	DESCRIPTION	CK'D	APP	DATE
5	SEISMIC DESIGN CAT. UPDATES DWG.-NO.C2			2/3
4	UPDATED PER CHANGER ORDER #3			1/23
3	BUILDING SITE CLASS UPDATES DWG.-NO.C2			8/7
2	UPDATED TITLE BLOCK AND BASE PLATE			5/21
1	BUILDING "A" BASE PLATE UPDATES			3/7

PUBLIC WORKS DEPARTMENT ENGINEERING DIVISION
CITY OF SAN BUENAVENTURA

FIRE STATION NO. 7

RIGID FRAME ELEVATION

DRN. BY: LJO	DES. BY: XXX	CK'D. BY: XXX

PRINCIPAL ENGINEER — DATE: 5 May 2026

CITY ENGINEER — DATE: 5/7/2026

SPEC. NUMBER 2025-010	PROJECT NUMBER FA11-1061
March 27, 2026 SHEET 51 OF 151	DWG. NO. 2025-D-010

FOR REFERENCE ONLY

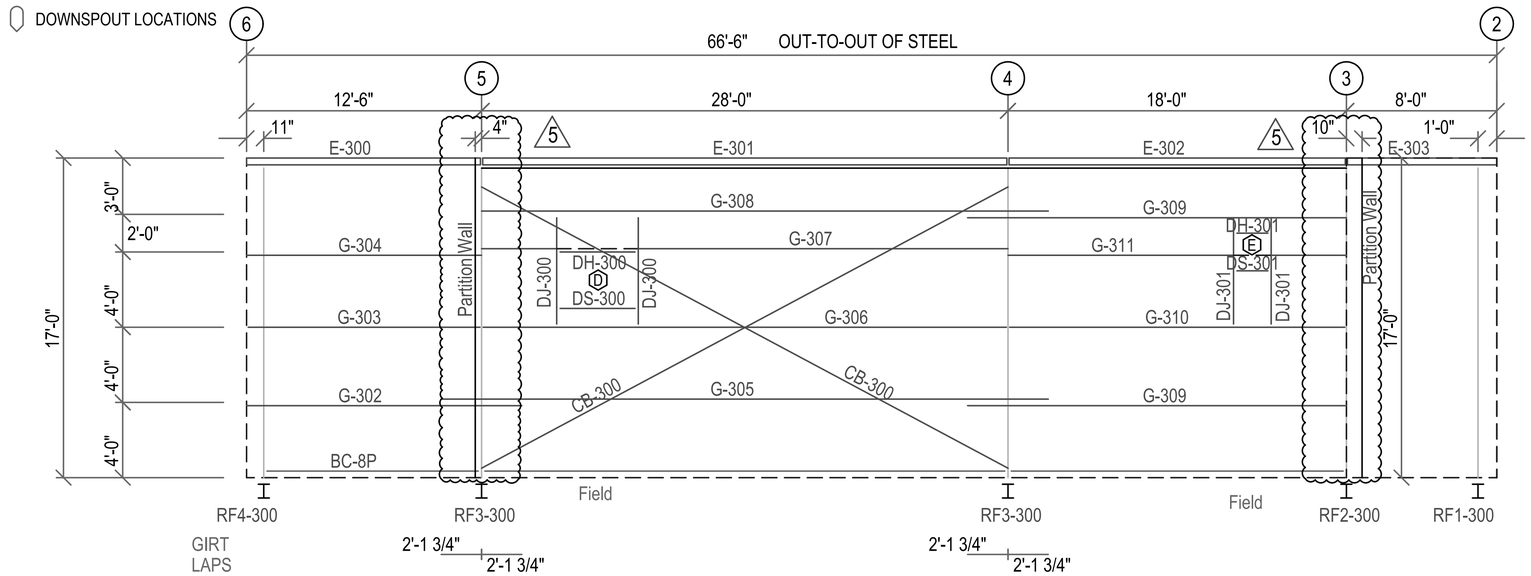

SIDEWALL FRAMING: FRAME LINE A

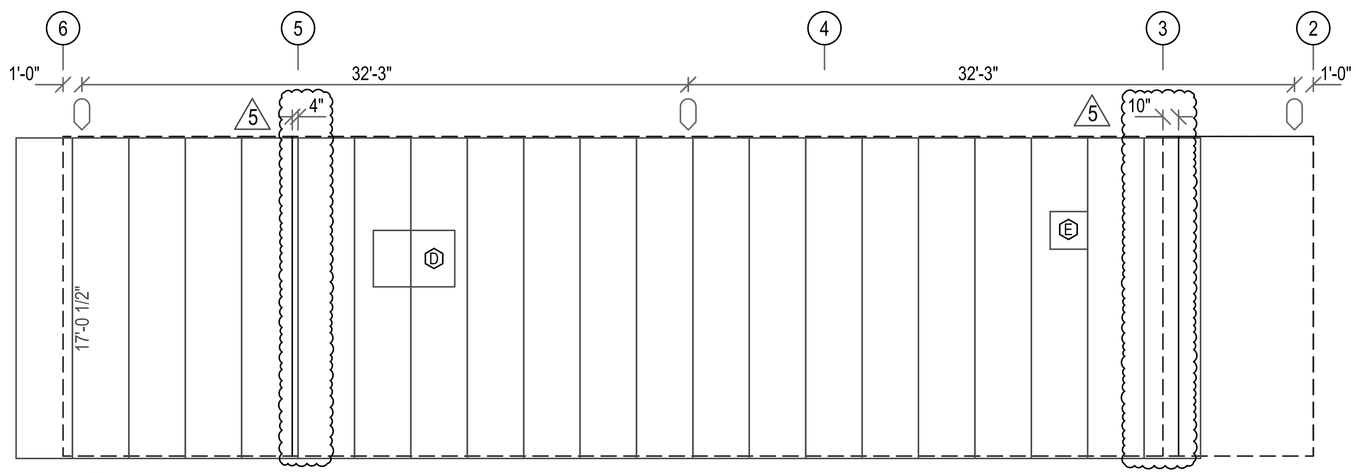

SIDEWALL SHEETING: FRAME LINE A

PANELS: 26 Ga. RL

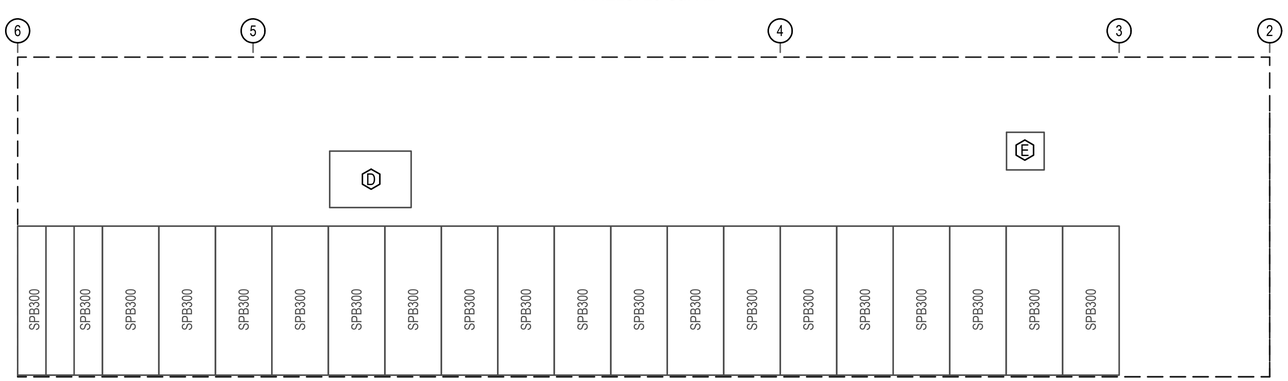

SIDEWALL LINER SHEETING: FRAME LINE A

PANELS: 29 Ga. RL

FRAME-OUT SCHEDULE		
CALL-OUT	DESCRIPTION	ROUGH OPENING
D	FRAMED OPENING 52" X 36"	(VERIFY)
E	FRAMED OPENING 24" X 24"	(VERIFY)

MEMBER TABLE
FRAME LINE A

MARK	PART
DJ-300	C83516
DJ-301	C83516
DH-300	C82516
DH-301	C82516
DS-300	C82516
DS-301	C82516
E-300	08434DU1
E-301	08554DU1
E-302	08434DU1
E-303	08434DU1
G-302	Z82516
G-303	C82516
G-304	Z82516
G-305	Z82516
G-306	C82514
G-307	Z82516
G-308	Z82516
G-309	Z82516
G-310	C82516
G-311	Z82516
CB-300	BR3/4

DEVELOPED BY:

ClearSpan
ENGINEERING SERVICES & PRODUCTS CO.
1440 18TH AVENUE SW
DYERSVILLE, IA 52040
P:563.875.6113
WWW.ESAPCO.COM
WWW.CLEARSPAN.COM

ORDER #: 7878201

CUSTOMER #: 9108797

PROFESSIONAL SEAL

REV.	DESCRIPTION	CK'D	APP	DATE
5	SEISMIC DESIGN CAT. UPDATES DWG.–NO.C2			2/3
4	UPDATED PER CHANGER ORDER #3			1/23
3	BUILDING SITE CLASS UPDATES DWG.–NO.C2			8/7
2	UPDATED TITLE BLOCK AND BASE PLATE			5/21
1	BUILDING "A" BASE PLATE UPDATES			3/7

PUBLIC WORKS DEPARTMENT ENGINEERING DIVISION
CITY OF SAN BUENAVENTURA

FIRE STATION NO. 7

SIDEWALL ELEVATION

DRN. BY: LJO | DES. BY: XXX | CK'D. BY: XXX

PRINCIPAL ENGINEER — DATE: 5 May 2026

CITY ENGINEER — DATE: 5/7/2026

SPEC. NUMBER 2025-010 | PROJECT NUMBER FA11-1061

March 27, 2026 | SHEET 52 OF 151 | DWG. NO. 2025-D-010

FOR REFERENCE ONLY

DOWNSPOUT LOCATIONS

FRAME-OUT SCHEDULE		
CALL-OUT	DESCRIPTION	ROUGH OPENING
A	3'-0" X 6'-8" WALK-IN DOOR	(VERIFY)
E	24" X 24" FRAMED OPENING	(VERIFY)
F	36" X 12" FRAMED OPENING	(VERIFY)

BOLT TABLE
FRAME LINE B

LOCATION	QUAN	TYPE	DIA	LENGTH
SC-1	2	A325	1/2"	1 1/2"
SC-2	2	A325	1/2"	1 1/2"

FLANGE BRACE TABLE
FRAME LINE B

▽ ID	MARK	LENGTH
1	FB2	2'-3 1/2"

MEMBER TABLE
FRAME LINE B

MARK	PART
SC-1	W1663030
SC-2	W1763030
SR-1	W8X10
SR-2	W8X10
DJ-3	C83516
DJ-4	C83516
DJ-5	C83516
DH-3	C82516
DH-4	C82516
DS-2	C82516
DS-3	C82516
E-4	08434DU1
E-5	08532DU1
E-6	08434DU1
G-14	Z82516
G-19	Z82516
G-20	C82516
G-21	Z82516
G-22	Z82516
G-23	C82516
G-24	Z82516
G-25	C82514
G-26	Z82516
G-27	Z82516
G-28	C82516
G-29	Z82516
G-30	Z82516
G-31	C82516
G-32	Z82516
CB-1	BR1
CB-2	BR1
CB-3	BR1
CB-4	BR1
CB-5	BR1
CB-6	BR1
CB-7	BR1
CB-8	BR1
CB-9	BR1

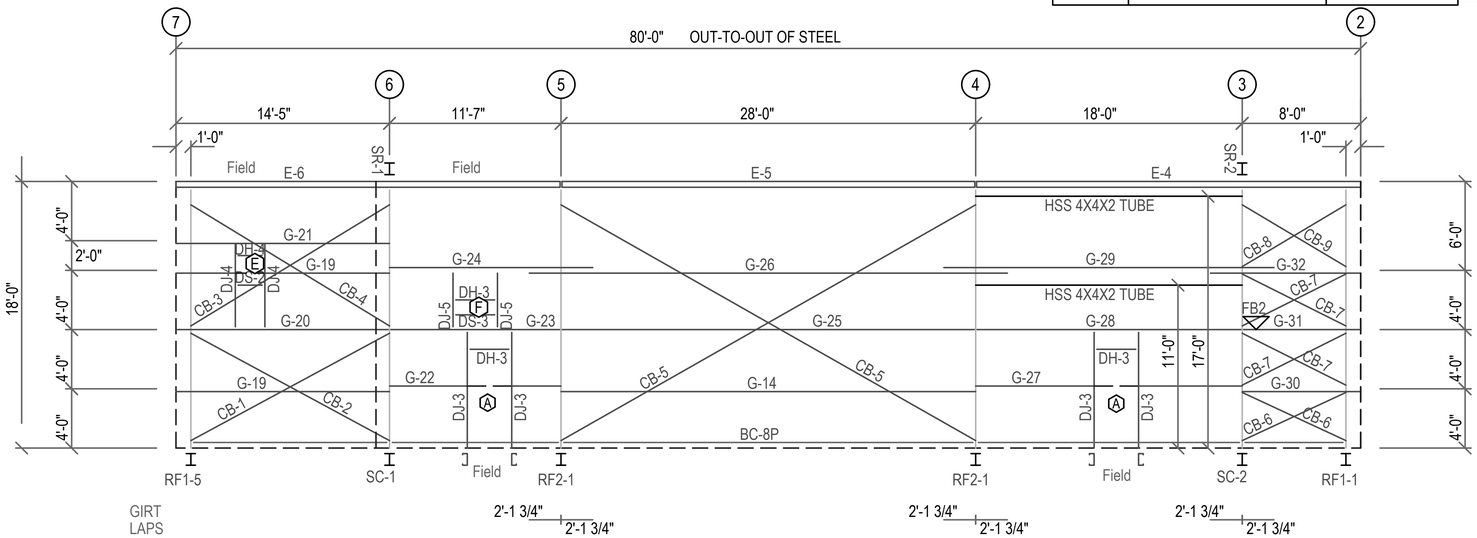

SIDEWALL FRAMING: FRAME LINE B

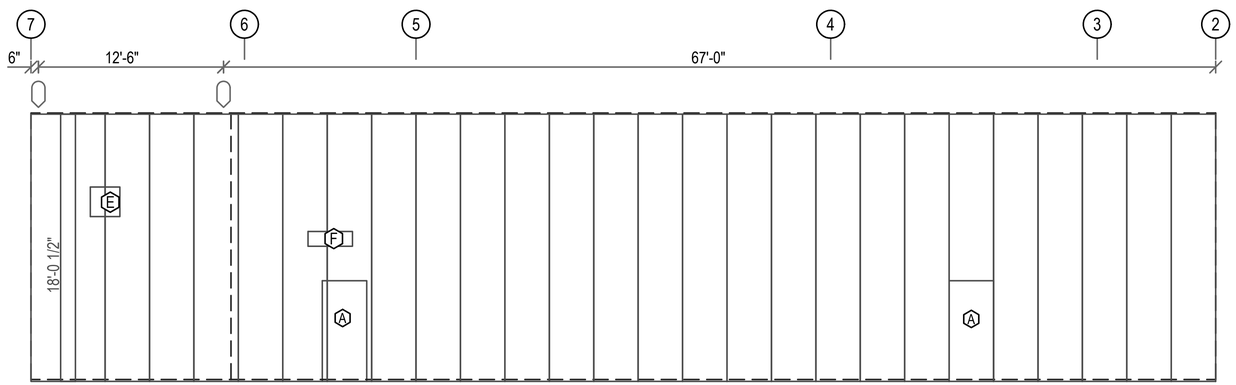

(C00416)

SIDEWALL SHEETING: FRAME LINE B

PANELS: 26 Ga. RL
(C00416) PANELS: 26 Ga. RL

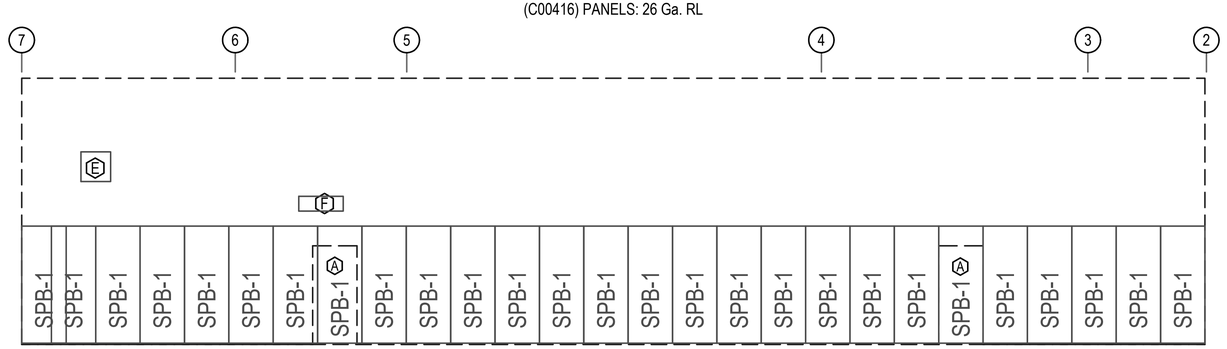

SIDEWALL LINER SHEETING: FRAME LINE B

PANELS: 29 Ga. RL

4

DEVELOPED BY:
ClearSpan
ENGINEERING SERVICES & PRODUCTS CO.
1440 18TH AVENUE SW
DYERSVILLE, IA 52040
P:563.875.6113
WWW.ESAPCO.COM
WWW.CLEARSPAN.COM

ORDER #: 7878201
CUSTOMER #: 9108797

PROFESSIONAL SEAL

REV.	DESCRIPTION	CK'D	APP	DATE
5	SEISMIC DESIGN CAT. UPDATES DWG.-NO.C2			2/3
4	UPDATED PER CHANGER ORDER #3			1/23
3	BUILDING SITE CLASS UPDATES DWG.-NO.C2			8/7
2	UPDATED TITLE BLOCK AND BASE PLATE			5/21
1	BUILDING "A" BASE PLATE UPDATES			3/7

PUBLIC WORKS DEPARTMENT ENGINEERING DIVISION
CITY OF SAN BUENAVENTURA
FIRE STATION NO. 7
SIDEWALL ELEVATION

DRN. BY: LJO | DES. BY: XXX | CK'D. BY: XXX

PRINCIPAL ENGINEER — DATE: 5 May 2026
CITY ENGINEER — DATE: 5/7/2026

SPEC. NUMBER 2025-010 | PROJECT NUMBER FA11-1061
March 27, 2026 | SHEET 53 OF 151 | DWG. NO. 2025-D-010

FOR REFERENCE ONLY

DOWNSPOUT LOCATIONS

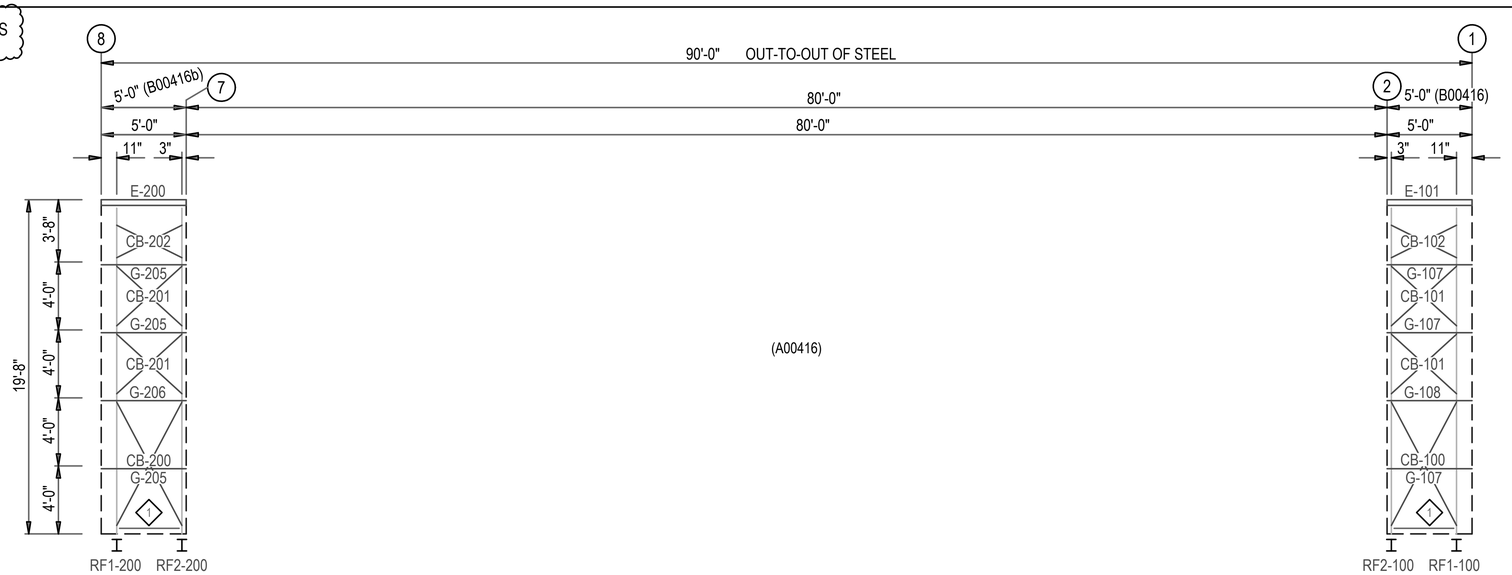

(A00416)

SIDEWALL FRAMING: FRAME LINE C

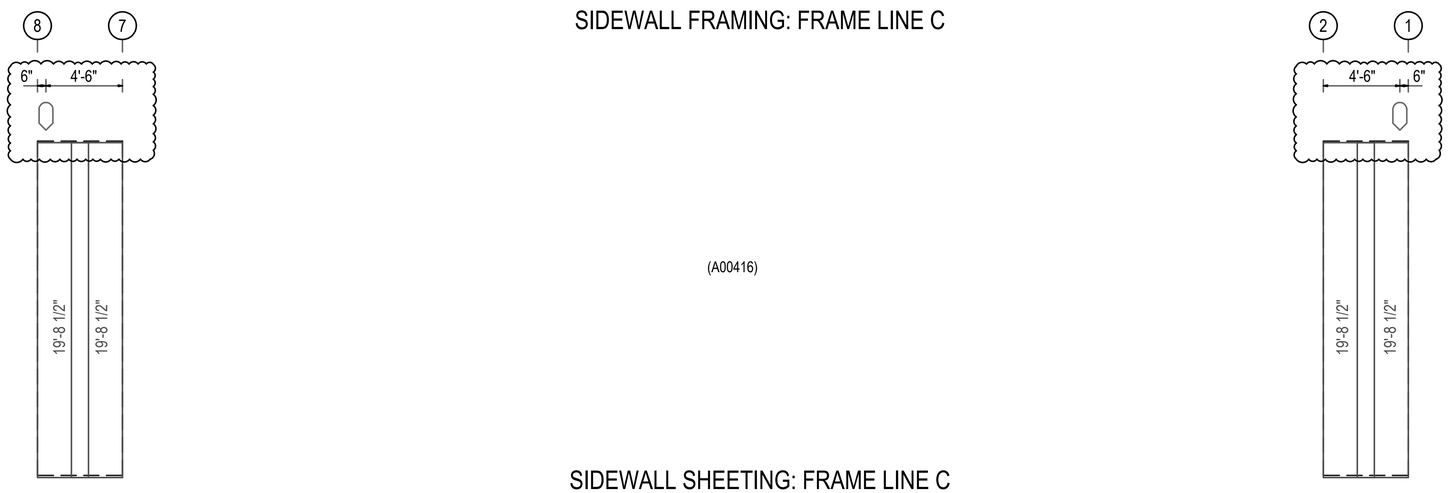

(A00416)

SIDEWALL SHEETING: FRAME LINE C

PANELS: 26 Ga. RL -

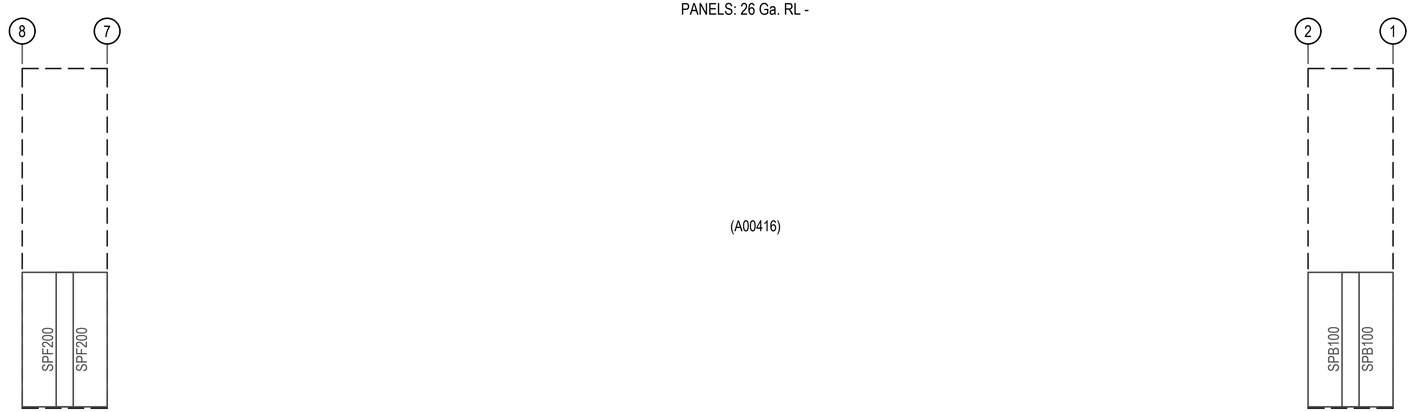

(A00416)

SIDEWALL LINER SHEETING: FRAME LINE C

PANELS: 29 Ga. RL -

MEMBER TABLE FRAME LINE C	
MARK	PART
B00416	
E-101	08434DU1
G-107	Z82516
G-108	C82516
CB-100	BR1/2
CB-101	BR1/2
CB-102	BR1/2
B00416b	
E-200	08434DU1
G-205	Z82516
G-206	C82516
CB-200	BR1/2
CB-201	BR1/2
CB-202	BR1/2

ANGLE TABLE FRAME LINE C		
◇ ID	MARK	PART
1	BC-2	U8216

DEVELOPED BY:

ClearSpan

ENGINEERING SERVICES & PRODUCTS CO.
1440 18TH AVENUE SW
DYERSVILLE, IA 52040
P:563.875.6113
WWW.ESAPCO.COM
WWW.CLEARSPAN.COM

ORDER #: 7878201

CUSTOMER #: 9108797

PROFESSIONAL SEAL

REV.	DESCRIPTION	CK'D	APP	DATE
5	SEISMIC DESIGN CAT. UPDATES DWG.–NO.C2			2/3
4	UPDATED PER CHANGER ORDER #3			1/23
3	BUILDING SITE CLASS UPDATES DWG.–NO.C2			8/7
2	UPDATED TITLE BLOCK AND BASE PLATE			5/21
1	BUILDING "A" BASE PLATE UPDATES			3/7

PUBLIC WORKS DEPARTMENT ENGINEERING DIVISION
CITY OF SAN BUENAVENTURA

FIRE STATION NO. 7

SIDEWALL ELEVATION

DRN. BY: LJO | DES. BY: XXX | CK'D. BY: XXX

PRINCIPAL ENGINEER — DATE: 5 May 2026

CITY ENGINEER — DATE: 5/7/2026

SPEC. NUMBER 2025-010 | PROJECT NUMBER FA11-1061

March 27, 2026 | SHEET 54 OF 151 | DWG. NO. 2025-D-010

FOR REFERENCE ONLY

DOWNSPOUT LOCATIONS

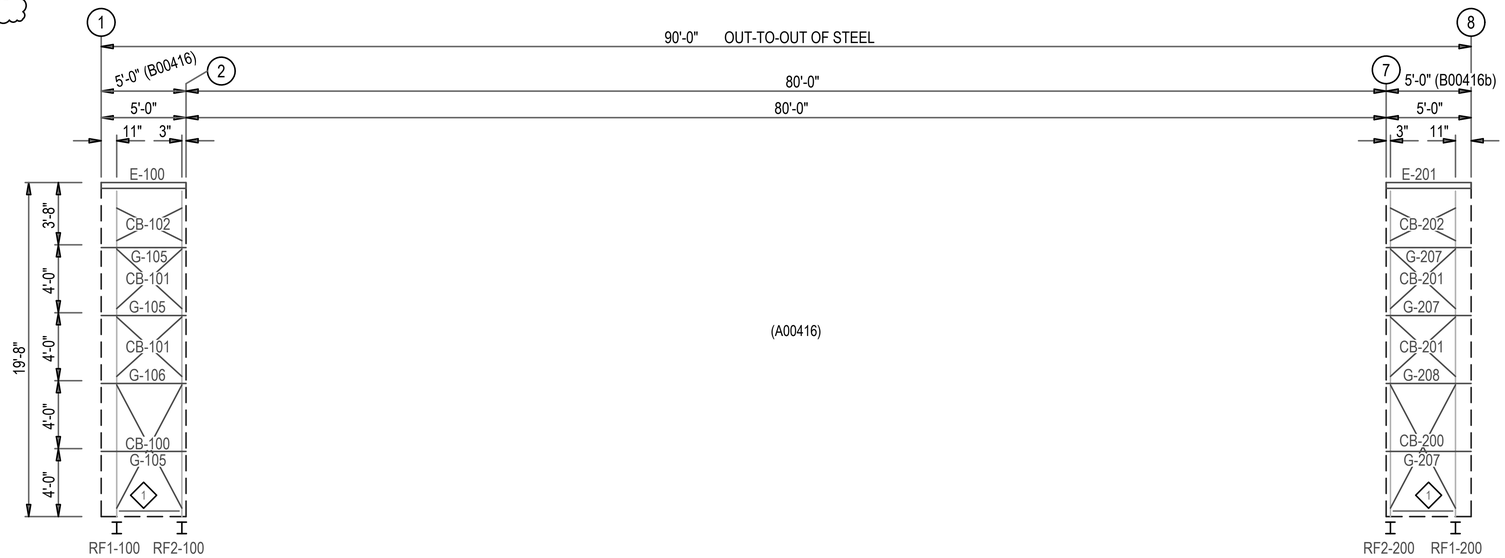

SIDEWALL FRAMING: FRAME LINE D

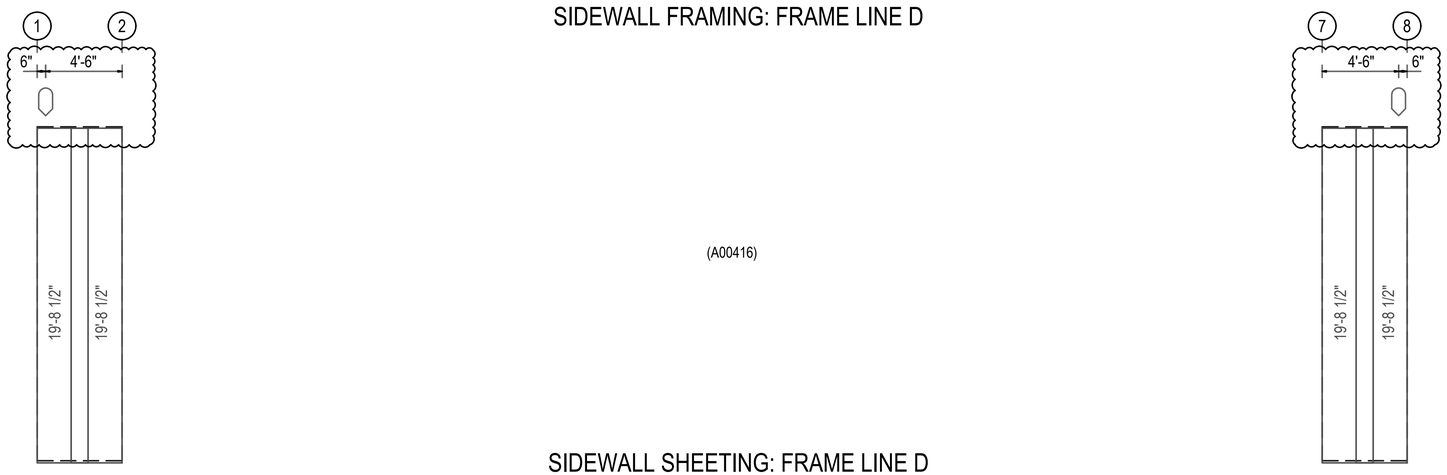

(A00416)

SIDEWALL SHEETING: FRAME LINE D

PANELS: 26 Ga. RL -

SIDEWALL LINER SHEETING: FRAME LINE D

PANELS: 29 Ga. RL -

MEMBER TABLE
FRAME LINE D

MARK	PART
B00416	
E-100	08434DU1
G-105	Z82516
G-106	C82516
CB-100	BR1/2
CB-101	BR1/2
CB-102	BR1/2
B00416b	
E-201	08434DU1
G-207	Z82516
G-208	C82516
CB-200	BR1/2
CB-201	BR1/2
CB-202	BR1/2

ANGLE TABLE
FRAME LINE D

◇ ID	MARK	PART
1	BC-2	U8216

DEVELOPED BY:

ClearSpan

ENGINEERING SERVICES & PRODUCTS CO.
1440 18TH AVENUE SW
DYERSVILLE, IA 52040
P:563.875.6113
WWW.ESAPCO.COM
WWW.CLEARSPAN.COM

ORDER #: 7878201

CUSTOMER #: 9108797

PROFESSIONAL SEAL

REV.	DESCRIPTION	CK'D	APP	DATE
5	SEISMIC DESIGN CAT. UPDATES DWG.–NO.C2			2/3
4	UPDATED PER CHANGER ORDER #3			1/23
3	BUILDING SITE CLASS UPDATES DWG.–NO.C2			8/7
2	UPDATED TITLE BLOCK AND BASE PLATE			5/21
1	BUILDING "A" BASE PLATE UPDATES			3/7

PUBLIC WORKS DEPARTMENT ENGINEERING DIVISION
CITY OF SAN BUENAVENTURA

FIRE STATION NO. 7

SIDEWALL ELEVATION

DRN. BY: LJO | DES. BY: XXX | CK'D. BY: XXX

PRINCIPAL ENGINEER — DATE: 5 May 2026

CITY ENGINEER — DATE: 5/7/2026

SPEC. NUMBER 2025-010 | PROJECT NUMBER FA11-1061

March 27, 2026 | SHEET 55 OF 151 | DWG. NO. 2025-D-010

FOR REFERENCE ONLY

DOWNSPOUT LOCATIONS

FRAME-OUT SCHEDULE		
CALL-OUT	DESCRIPTION	ROUGH OPENING
C	3'-0" X 6'-8" DOOR (BY OTHERS)	(VERIFY)
G	60" X 72" FRAMED OPENING	(VERIFY)

BOLT TABLE
FRAME LINE E

LOCATION	QUAN	TYPE	DIA	LENGTH
WF-1 - WF-2	8	A325	3/4"	2 1/2"
WF-1 - RF1-4	12	A325	5/8"	1 3/4"
WF-1 - RF2-4	12	A325	5/8"	1 3/4"
WF-3 - WF-4	8	A325	3/4"	2 1/2"
WF-3 - RF2-4	12	A325	5/8"	1 3/4"

MEMBER TABLE
FRAME LINE E

MARK	PART
WF-1	W1864030
WF-2	W2284030
WF-3	W1864030
WF-4	W2484030
DJ-2	C83516
DJ-3	C83516
DH-2	C82516
DH-3	C82516
DS-1	C82516
E-1	08432DU1
E-2	08532DU1
E-3	08432DU1
G-11	Z82516
G-12	C83514
G-13	Z82512
G-14	Z82516
G-15	C83514
G-16	Z82516
G-17	Z82516
G-18	Z82516

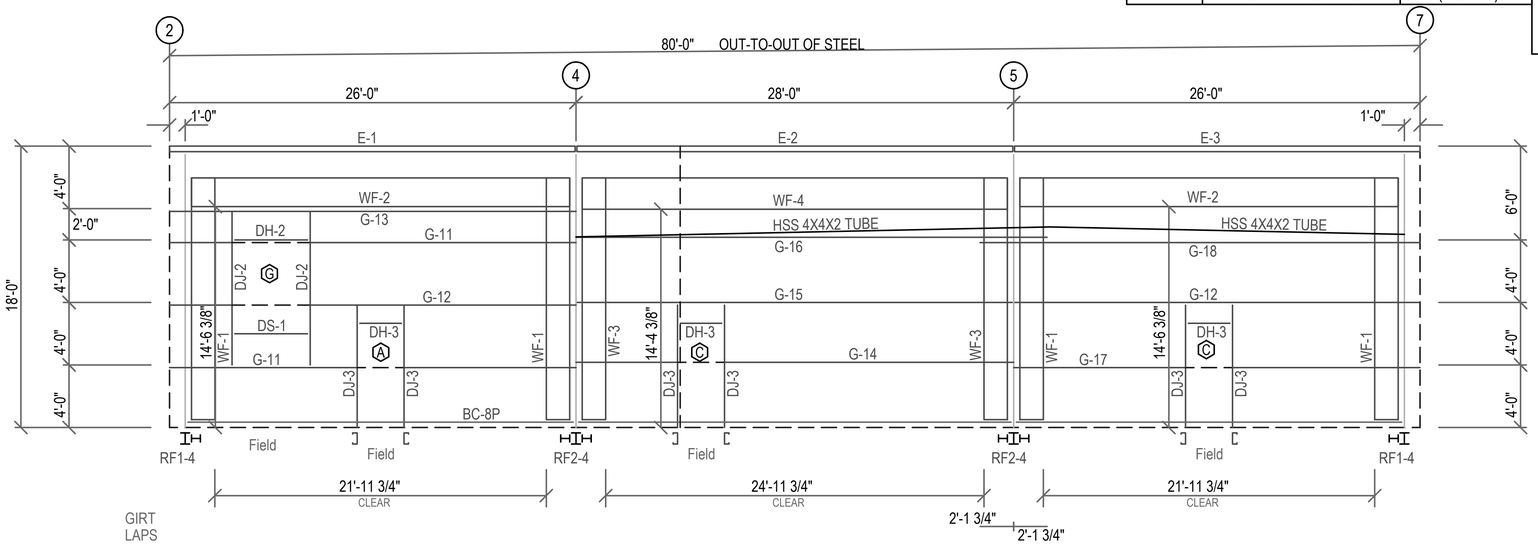

SIDEWALL FRAMING: FRAME LINE E

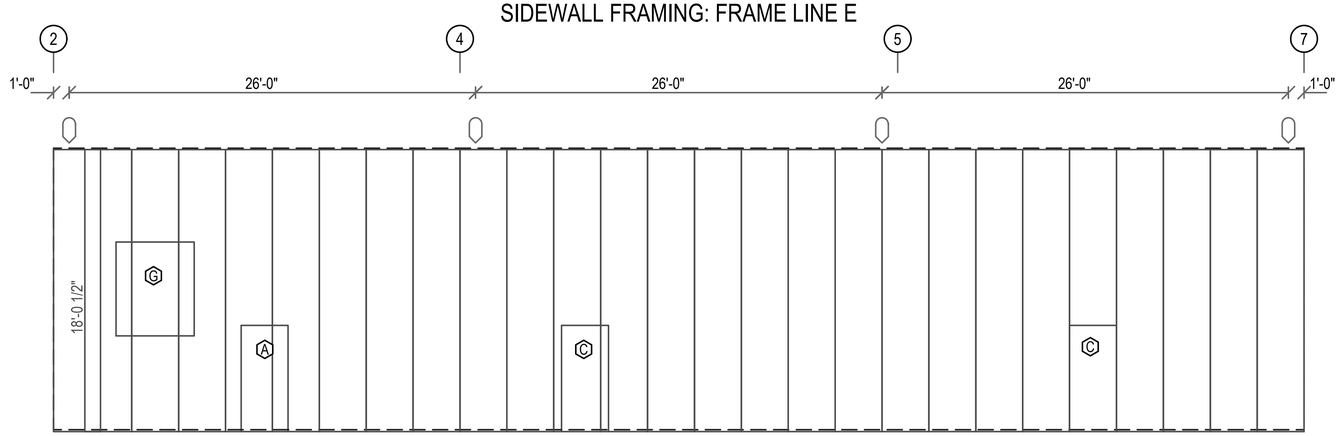

SIDEWALL SHEETING: FRAME LINE E

PANELS: 26 Ga. RL

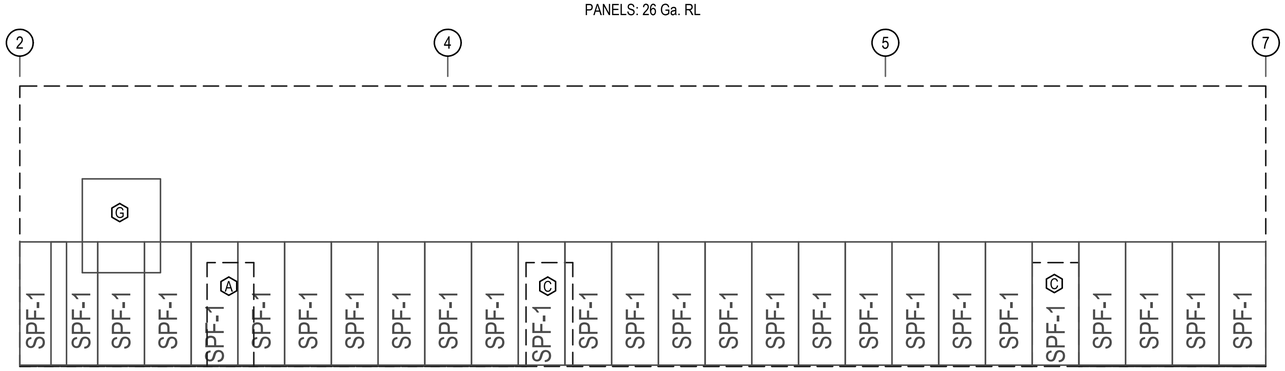

SIDEWALL LINER SHEETING: FRAME LINE E

PANELS: 29 Ga. RL

4

DEVELOPED BY:

ClearSpan

ENGINEERING SERVICES & PRODUCTS CO.
1440 18TH AVENUE SW
DYERSVILLE, IA 52040
P:563.875.6113
WWW.ESAPCO.COM
WWW.CLEARSPAN.COM

ORDER #: 7878201

CUSTOMER #: 9108797

PROFESSIONAL SEAL

REV.	DESCRIPTION	CK'D	APP	DATE
5	SEISMIC DESIGN CAT. UPDATES DWG.-NO.C2			2/3
4	UPDATED PER CHANGER ORDER #3			1/23
3	BUILDING SITE CLASS UPDATES DWG.-NO.C2			8/7
2	UPDATED TITLE BLOCK AND BASE PLATE			5/21
1	BUILDING "A" BASE PLATE UPDATES			3/7

PUBLIC WORKS DEPARTMENT ENGINEERING DIVISION
CITY OF SAN BUENAVENTURA

FIRE STATION NO. 7

SIDEWALL ELEVATION

DRN. BY: LJO | DES. BY: XXX | CK'D. BY: XXX

PRINCIPAL ENGINEER — DATE: 5 May 2026

CITY ENGINEER — DATE: 5/7/2026

SPEC. NUMBER 2025-010 | PROJECT NUMBER FA11-1061

March 27, 2026 | SHEET 56 OF 151 | DWG. NO. 2025-D-010

FOR REFERENCE ONLY

FRAME-OUT SCHEDULE		
CALL-OUT	DESCRIPTION	ROUGH OPENING
B	14'-0" X 14'-0" OVHD DOOR	14'-0" X 14'-0"

MEMBER TABLE FRAME LINE 1	
MARK	PART
BC-2	U8216
DJ-100	C83516
DH-100	C82516
G-100	Z82516
G-101	C82516
G-102	Z82512
G-103	Z82516
G-104	C82516

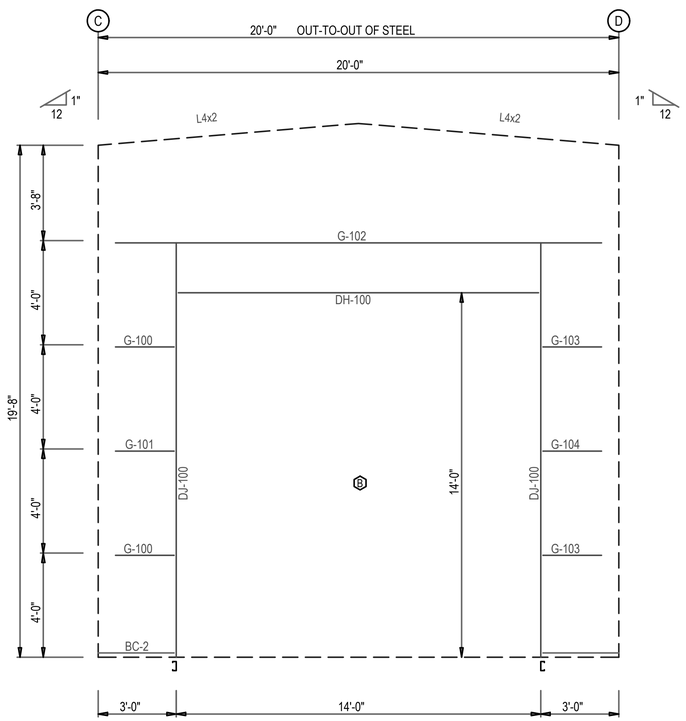

ENDWALL FRAMING: FRAME LINE 1

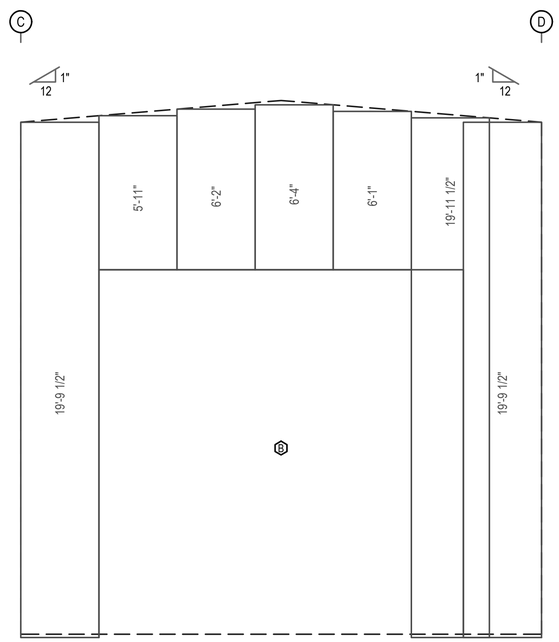

ENDWALL SHEETING: FRAME LINE 1

PANELS: 26 Ga. RL -

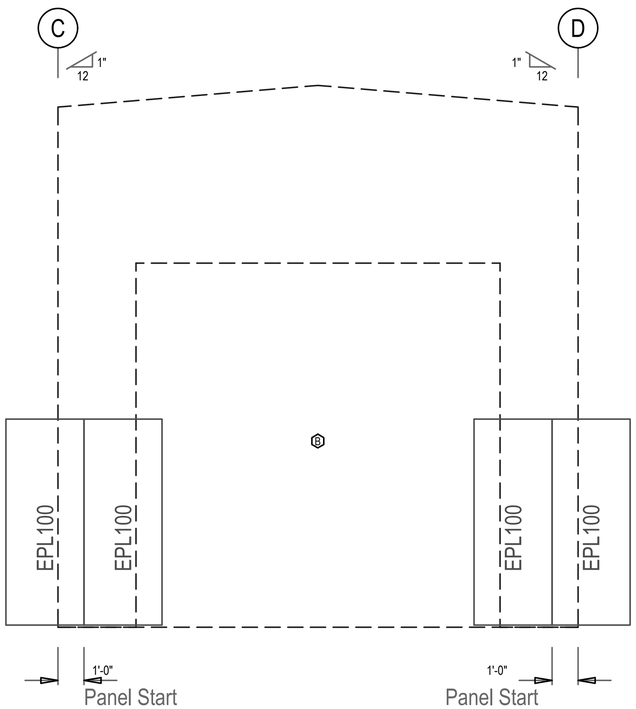

ENDWALL LINER SHEETING: FRAME LINE 1

PANELS: 29 Ga. RL -

DEVELOPED BY:

ClearSpan

ENGINEERING SERVICES & PRODUCTS CO.
1440 18TH AVENUE SW
DYERSVILLE, IA 52040
P:563.875.6113
WWW.ESAPCO.COM
WWW.CLEARSPAN.COM

ORDER #: 7878201

CUSTOMER #: 9108797

PROFESSIONAL SEAL

REV.	DESCRIPTION	CK'D	APP	DATE
5	SEISMIC DESIGN CAT. UPDATES DWG.–NO.C2			2/3
4	UPDATED PER CHANGER ORDER #3			1/23
3	BUILDING SITE CLASS UPDATES DWG.–NO.C2			8/7
2	UPDATED TITLE BLOCK AND BASE PLATE			5/21
1	BUILDING "A" BASE PLATE UPDATES			3/7

PUBLIC WORKS DEPARTMENT ENGINEERING DIVISION

CITY OF SAN BUENAVENTURA

FIRE STATION NO. 7

ENDWALL ELEVATION

DRN. BY: LJO | DES. BY: XXX | CK'D. BY: XXX

PRINCIPAL ENGINEER — DATE: 5 May 2026

CITY ENGINEER — DATE: 5/7/2026

SPEC. NUMBER 2025-010 | PROJECT NUMBER FA11-1061

March 27, 2026 | SHEET 57 OF 151 | DWG. NO. 2025-D-010

FOR REFERENCE ONLY

FRAME-OUT SCHEDULE		
CALL-OUT	DESCRIPTION	ROUGH OPENING
B	14'-0" X 14'-0" OVHD DOOR	14'-0" X 14'-0"

BOLT TABLE
FRAME LINE 2

LOCATION	QUAN	TYPE	DIA	LENGTH
A00416				
Columns/Raf	2	A325	5/8"	1 1/2"

MEMBER TABLE
FRAME LINE 2

MARK	PART
A00416	
BC-2	U8216
EC-1	W8X10
DJ-1	C83516
DH-1	C82516
G-1	Z82516
G-2	C82516
G-3	Z83512
G-4	Z82516
G-5	C82516
G-6	Z82516
G-7	C82516
G-8	Z83512
G-9	Z82516
G-10	C82516

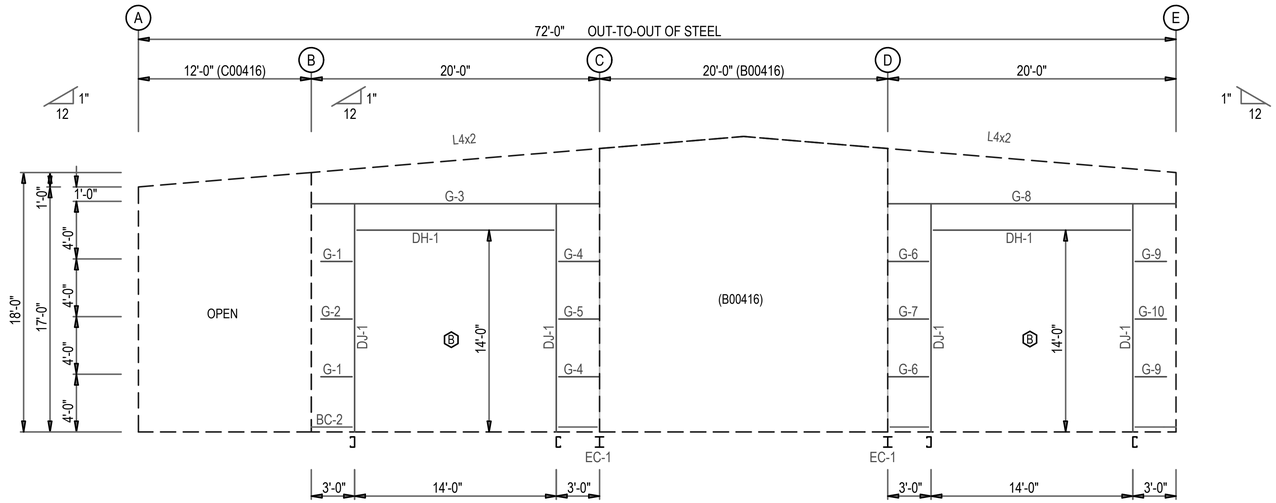

ENDWALL FRAMING: FRAME LINE 2

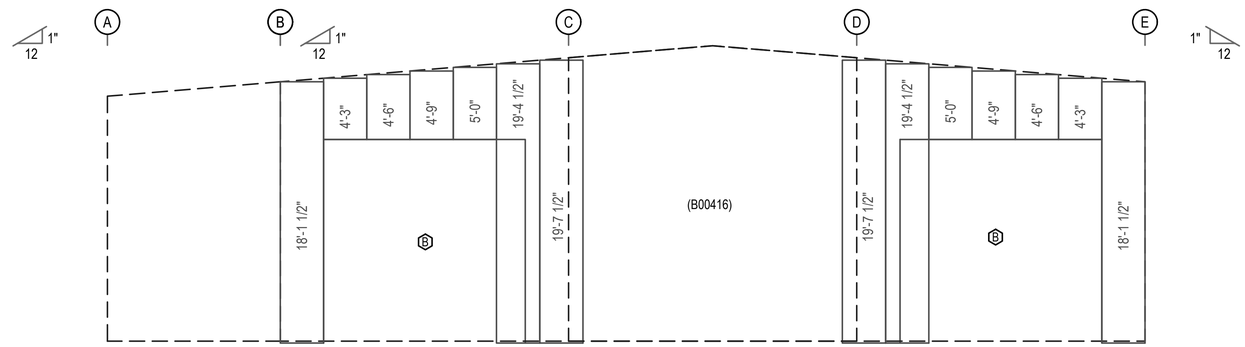

ENDWALL SHEETING: FRAME LINE 2

PANELS: 26 Ga. RL -

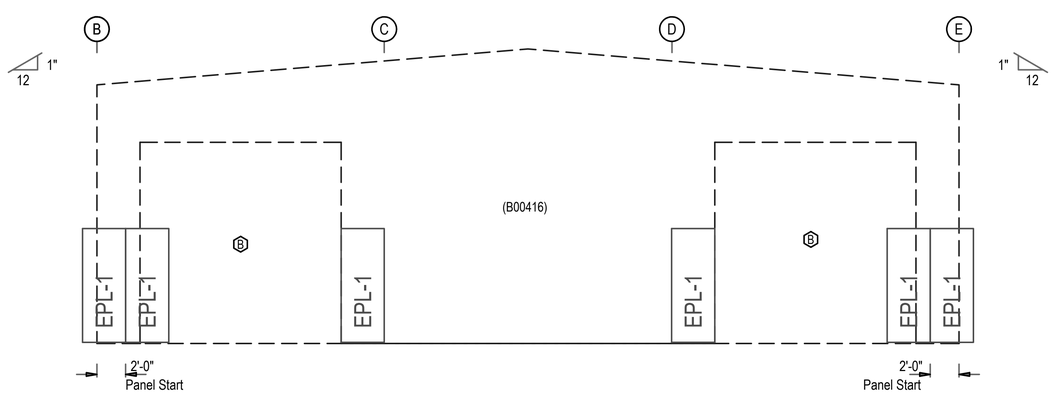

ENDWALL LINER SHEETING: FRAME LINE 2

PANELS: 29 Ga. RL -

DEVELOPED BY:

ClearSpan
ENGINEERING SERVICES & PRODUCTS CO.
1440 18TH AVENUE SW
DYERSVILLE, IA 52040
P:563.875.6113
WWW.ESAPCO.COM
WWW.CLEARSPAN.COM

ORDER #: 7878201

CUSTOMER #: 9108797

PROFESSIONAL SEAL

REV.	DESCRIPTION	CK'D	APP	DATE
5	SEISMIC DESIGN CAT. UPDATES DWG.–NO.C2			2/3
4	UPDATED PER CHANGER ORDER #3			1/23
3	BUILDING SITE CLASS UPDATES DWG.–NO.C2			8/7
2	UPDATED TITLE BLOCK AND BASE PLATE			5/21
1	BUILDING "A" BASE PLATE UPDATES			3/7

PUBLIC WORKS DEPARTMENT ENGINEERING DIVISION
CITY OF SAN BUENAVENTURA

FIRE STATION NO. 7

ENDWALL ELEVATION

DRN. BY: LJO | DES. BY: XXX | CK'D. BY: XXX

PRINCIPAL ENGINEER — DATE 5 May 2026

CITY ENGINEER — DATE 5/7/2026

SPEC. NUMBER 2025-010 | PROJECT NUMBER FA11-1061

March 27, 2026 | SHEET 58 OF 151 | DWG. NO. 2025-D-010

FOR REFERENCE ONLY

FRAME-OUT SCHEDULE		
CALL-OUT	DESCRIPTION	ROUGH OPENING
A	3'-0" X 6'-8" WALK-IN DOOR	(VERIFY)

MEMBER TABLE PARTITION 1	
MARK	PART
BC-2	U8216
DJ-300	C83516
DH-300	C82516
G-308	Z82516
G-309	C82516
RF2-300	W10X12
RF2-301	W8X10

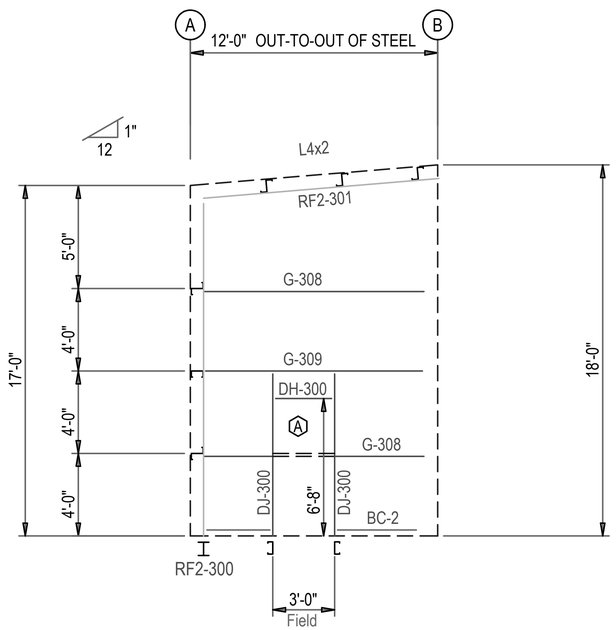

PARTITION WALL FRAMING: FRAME LINE 3

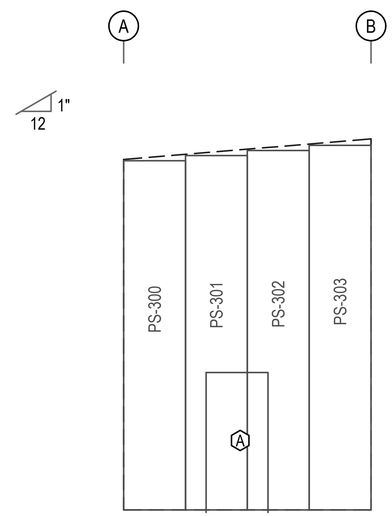

PARTITION WALL SHEETING: FRAME LINE 3

PANELS: 26 Ga. RL -

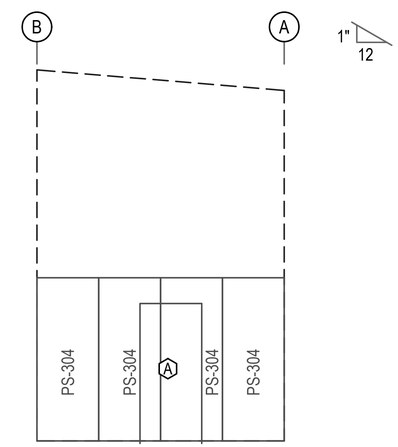

PARTITION WALL LINER SHEETING: FRAME LINE 3

PANELS: 29 Ga. RL -

DEVELOPED BY:

ClearSpan

ENGINEERING SERVICES & PRODUCTS CO.
1440 18TH AVENUE SW
DYERSVILLE, IA 52040
P:563.875.6113
WWW.ESAPCO.COM
WWW.CLEARSPAN.COM

ORDER #: 7878201

CUSTOMER #: 9108797

PROFESSIONAL SEAL

REV.	DESCRIPTION	CK'D	APP	DATE
5	SEISMIC DESIGN CAT. UPDATES DWG.–NO.C2			2/3
4	UPDATED PER CHANGER ORDER #3			1/23
3	BUILDING SITE CLASS UPDATES DWG.–NO.C2			8/7
2	UPDATED TITLE BLOCK AND BASE PLATE			5/21
1	BUILDING "A" BASE PLATE UPDATES			3/7

PUBLIC WORKS DEPARTMENT ENGINEERING DIVISION

CITY OF SAN BUENAVENTURA

FIRE STATION NO. 7

ENDWALL ELEVATION

DRN. BY: LJO	DES. BY: XXX	CK'D. BY: XXX

PRINCIPAL ENGINEER — DATE: 5 May 2026

CITY ENGINEER — DATE: 5/7/2026

SPEC. NUMBER 2025-010	PROJECT NUMBER FA11-1061
March 27, 2026 SHEET 59 OF 151	DWG. NO. 2025-D-010

FOR REFERENCE ONLY

MEMBER TABLE PARTITION 2	
MARK	PART
BC-2	U8216
G-310	Z82516
G-311	C82516

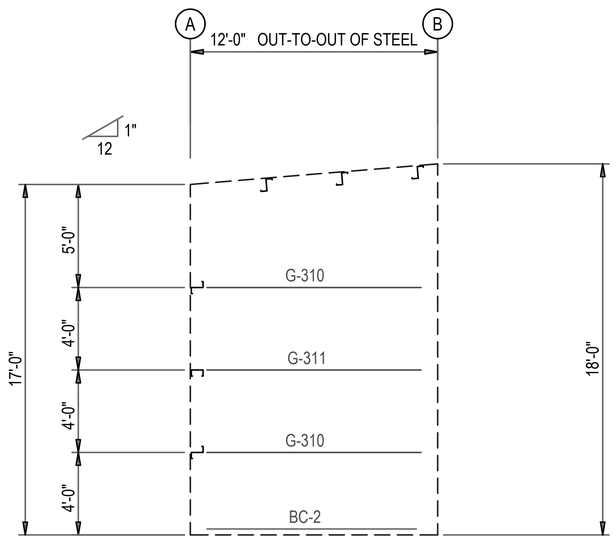

PARTITION WALL FRAMING: FRAME LINE 5

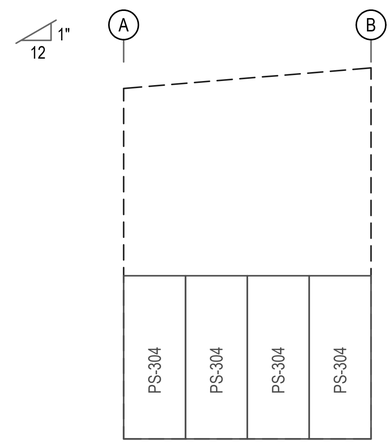

PARTITION WALL LINER SHEETING: FRAME LINE 5

PANELS: 29 Ga. RL -

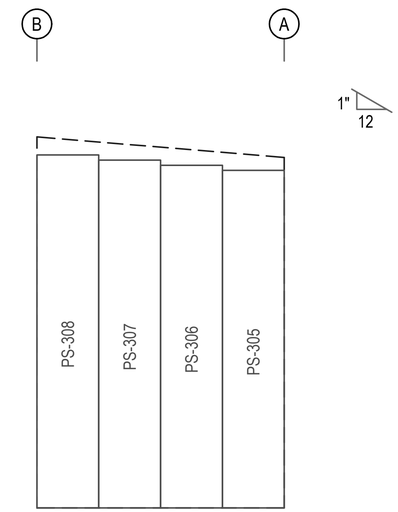

PARTITION WALL SHEETING: FRAME LINE 5

PANELS: 29 Ga. RL -

DEVELOPED BY:

ClearSpan

ENGINEERING SERVICES & PRODUCTS CO.
1440 18TH AVENUE SW
DYERSVILLE, IA 52040
P:563.875.6113
WWW.ESAPCO.COM
WWW.CLEARSPAN.COM

ORDER #: 7878201

CUSTOMER #: 9108797

PROFESSIONAL SEAL

REV.	DESCRIPTION	CK'D	APP	DATE
5	SEISMIC DESIGN CAT. UPDATES DWG.–NO.C2			2/3
4	UPDATED PER CHANGER ORDER #3			1/23
3	BUILDING SITE CLASS UPDATES DWG.–NO.C2			8/7
2	UPDATED TITLE BLOCK AND BASE PLATE			5/21
1	BUILDING "A" BASE PLATE UPDATES			3/7

PUBLIC WORKS DEPARTMENT ENGINEERING DIVISION
CITY OF SAN BUENAVENTURA

FIRE STATION NO. 7

ENDWALL ELEVATION

DRN. BY: LJO | DES. BY: XXX | CK'D. BY: XXX

PRINCIPAL ENGINEER — DATE 5 May 2026

CITY ENGINEER — DATE 5/7/2026

SPEC. NUMBER 2025-010 | PROJECT NUMBER FA11-1061

March 27, 2026 | SHEET 60 OF 151 | DWG. NO. 2025-D-010

FOR REFERENCE ONLY

BOLT TABLE FRAME LINE 6				
LOCATION	QUAN	TYPE	DIA	LENGTH
Cor_Column/Raf	2	A325	5/8"	1 1/2"

MEMBER TABLE FRAME LINE 6	
MARK	PART
BC-2	U8216
EC-300	W8X10
G-300	Z82516
G-301	C82516
RF4-300	W10X12
RF4-301	W8X10

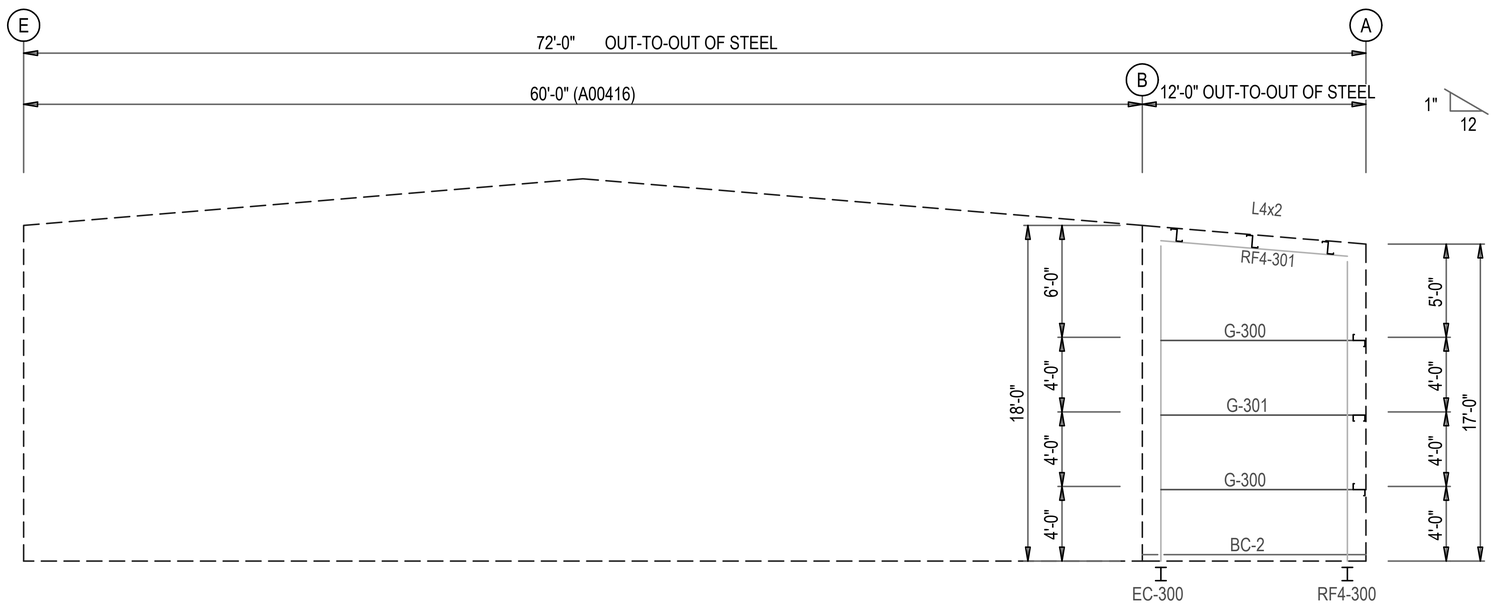

ENDWALL FRAMING: FRAME LINE 6

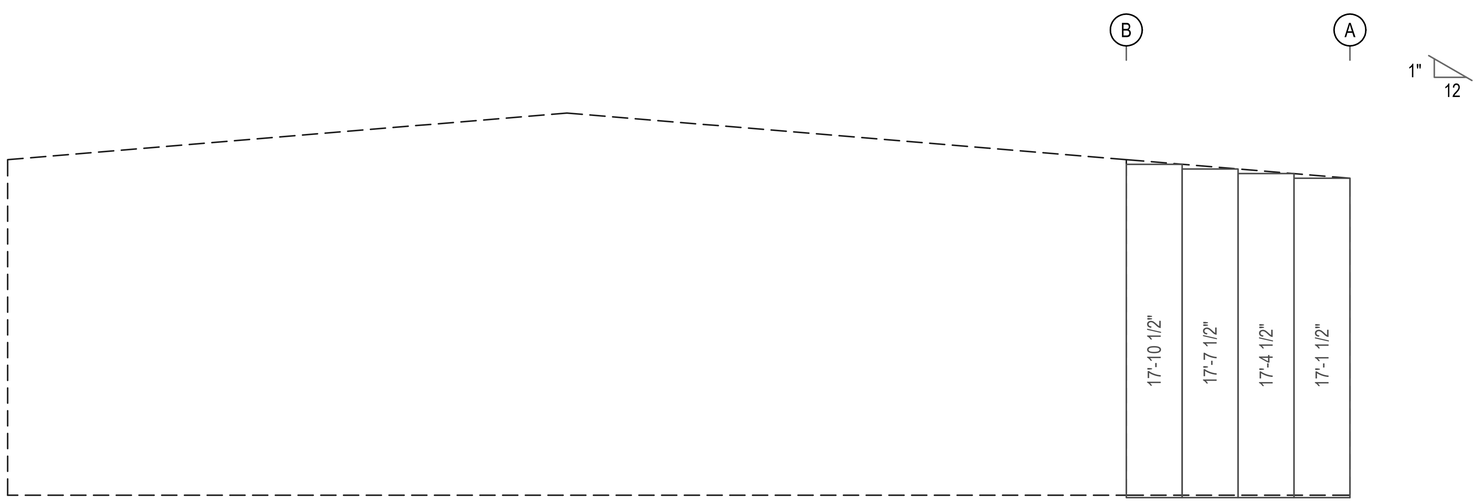

ENDWALL SHEETING: FRAME LINE 6

PANELS: 26 Ga. RL -

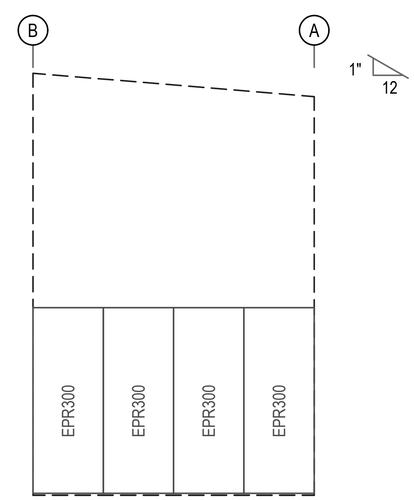

ENDWALL LINER SHEETING: FRAME LINE 6

PANELS: 29 Ga. RL -

DEVELOPED BY:

ClearSpan

ENGINEERING SERVICES & PRODUCTS CO.
1440 18TH AVENUE SW
DYERSVILLE, IA 52040
P:563.875.6113
WWW.ESAPCO.COM
WWW.CLEARSPAN.COM

ORDER #: 7878201

CUSTOMER #: 9108797

PROFESSIONAL SEAL

REV.	DESCRIPTION	CK'D	APP	DATE
5	SEISMIC DESIGN CAT. UPDATES DWG.–NO.C2			2/3
4	UPDATED PER CHANGER ORDER #3			1/23
3	BUILDING SITE CLASS UPDATES DWG.–NO.C2			8/7
2	UPDATED TITLE BLOCK AND BASE PLATE			5/21
1	BUILDING "A" BASE PLATE UPDATES			3/7

PUBLIC WORKS DEPARTMENT ENGINEERING DIVISION
CITY OF SAN BUENAVENTURA

FIRE STATION NO. 7

ENDWALL ELEVATION

DRN. BY: LJO | DES. BY: XXX | CK'D. BY: XXX

PRINCIPAL ENGINEER — DATE: 5 May 2026

CITY ENGINEER — DATE: 5/7/2026

SPEC. NUMBER 2025-010 | PROJECT NUMBER FA11-1061

March 27, 2026 | SHEET 61 OF 151 | DWG. NO. 2025-D-010

FOR REFERENCE ONLY

FRAME-OUT SCHEDULE		
CALL-OUT	DESCRIPTION	ROUGH OPENING
B	14'-0" X 14'-0" OVHD DOOR	14'-0" X 14'-0"

BOLT TABLE
FRAME LINE 7

LOCATION	QUAN	TYPE	DIA	LENGTH
Columns/Raf	2	A325	5/8"	1 1/2"

MEMBER TABLE
FRAME LINE 7

MARK	PART
A00416	
BC-2	U8216
EC-1	W8X10
DJ-1	C83516
DH-1	C82516
G-1	Z82516
G-2	C82516
G-3	Z83512
G-4	Z82516
G-5	C82516
G-6	Z82516
G-7	C82516
G-8	Z83512
G-9	Z82516
G-10	C82516

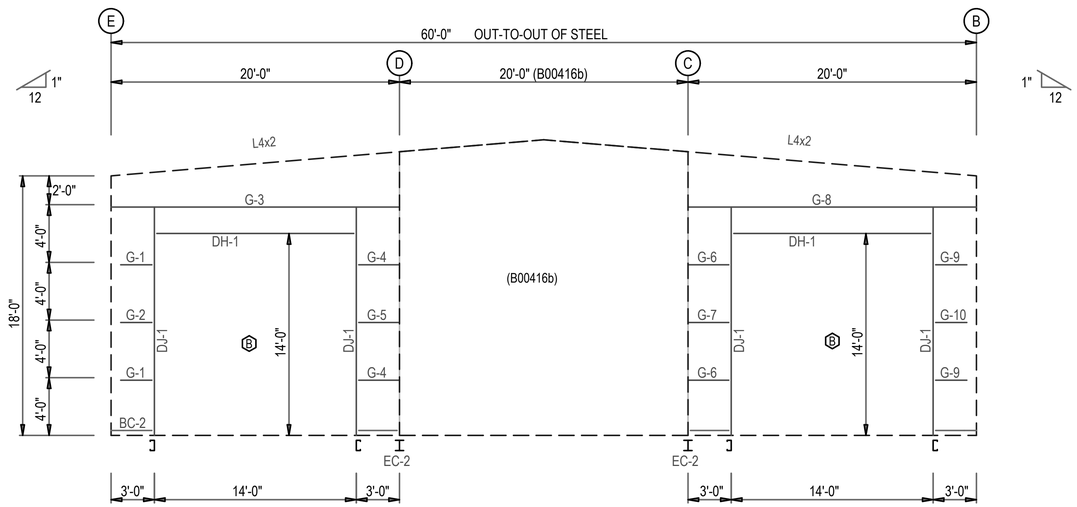

ENDWALL FRAMING: FRAME LINE 7

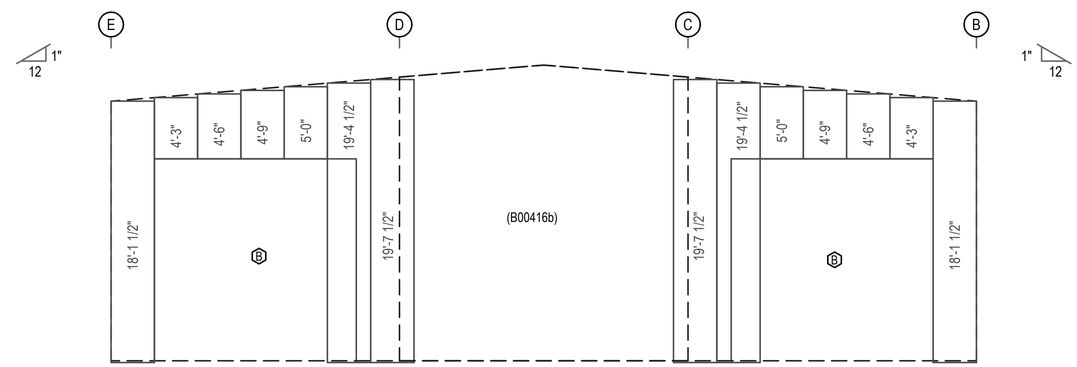

ENDWALL SHEETING: FRAME LINE 7

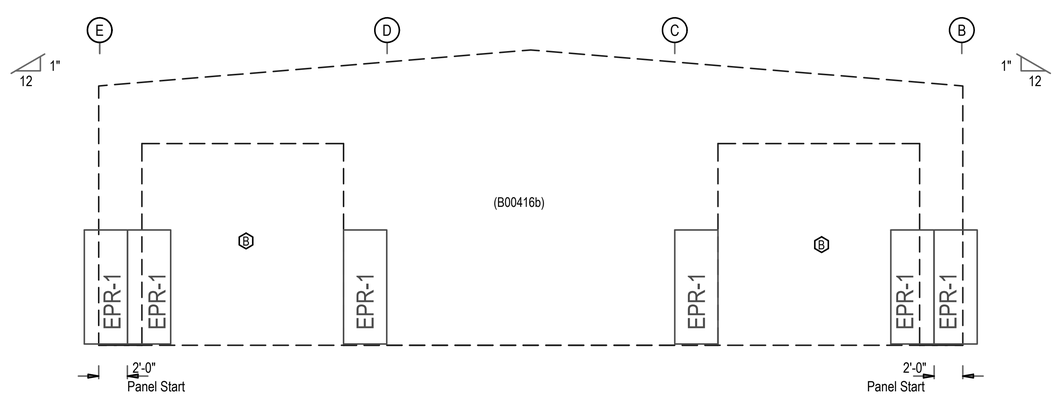

ENDWALL LINER SHEETING: FRAME LINE 7

PANELS: 29 Ga. RL -

DEVELOPED BY:

ClearSpan

ENGINEERING SERVICES & PRODUCTS CO.
1440 18TH AVENUE SW
DYERSVILLE, IA 52040
P:563.875.6113
WWW.ESAPCO.COM
WWW.CLEARSPAN.COM

ORDER #: 7878201

CUSTOMER #: 9108797

PROFESSIONAL SEAL

REV.	DESCRIPTION	CK'D	APP	DATE
5	SEISMIC DESIGN CAT. UPDATES DWG.–NO.C2			2/3
4	UPDATED PER CHANGER ORDER #3			1/23
3	BUILDING SITE CLASS UPDATES DWG.–NO.C2			8/7
2	UPDATED TITLE BLOCK AND BASE PLATE			5/21
1	BUILDING "A" BASE PLATE UPDATES			3/7

PUBLIC WORKS DEPARTMENT ENGINEERING DIVISION
CITY OF SAN BUENAVENTURA

FIRE STATION NO. 7

PARTITION WALL ELEVATION

DRN. BY: LJO | DES. BY: XXX | CK'D. BY: XXX

PRINCIPAL ENGINEER — DATE: 5 May 2026

CITY ENGINEER — DATE: 5/7/2026

SPEC. NUMBER 2025-010 | PROJECT NUMBER FA11-1061

March 27, 2026 | SHEET 62 OF 151 | DWG. NO. 2025-D-010

FOR REFERENCE ONLY

FRAME-OUT SCHEDULE		
CALL-OUT	DESCRIPTION	ROUGH OPENING
B	14'-0" X 14'-0" OVHD DOOR	14'-0" X 14'-0"

MEMBER TABLE
FRAME LINE 8

MARK	PART
BC-2	U8216
DJ-200	C83516
DH-200	C82516
G-200	Z82516
G-201	C82516
G-202	Z82512
G-203	Z82516
G-204	C82516

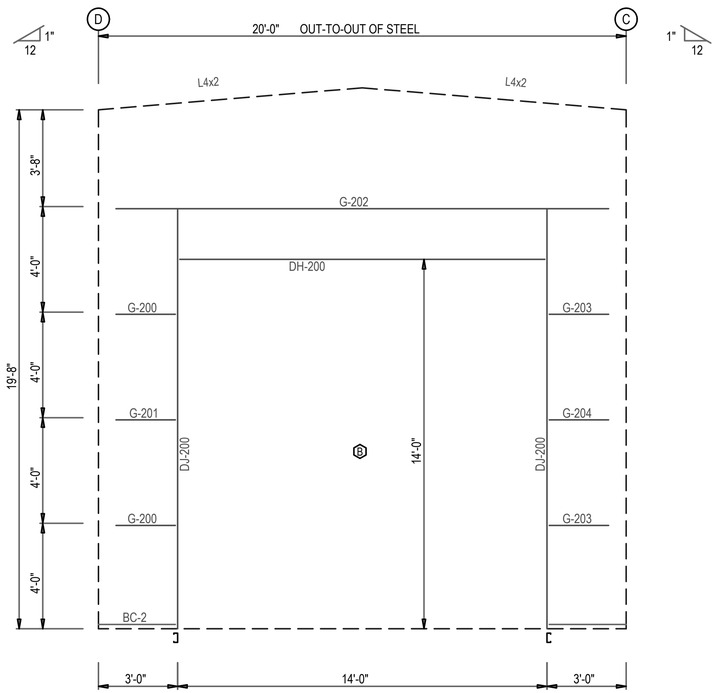

ENDWALL FRAMING: FRAME LINE 8

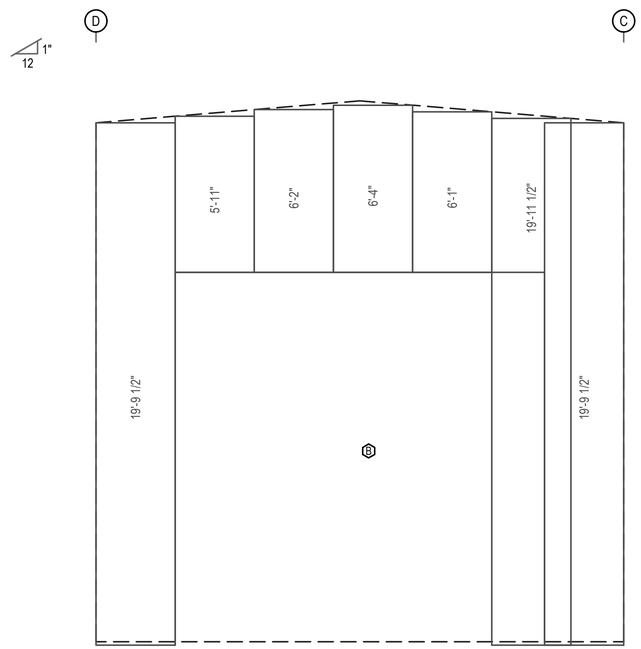

ENDWALL SHEETING: FRAME LINE 8

PANELS: 26 Ga. RL -

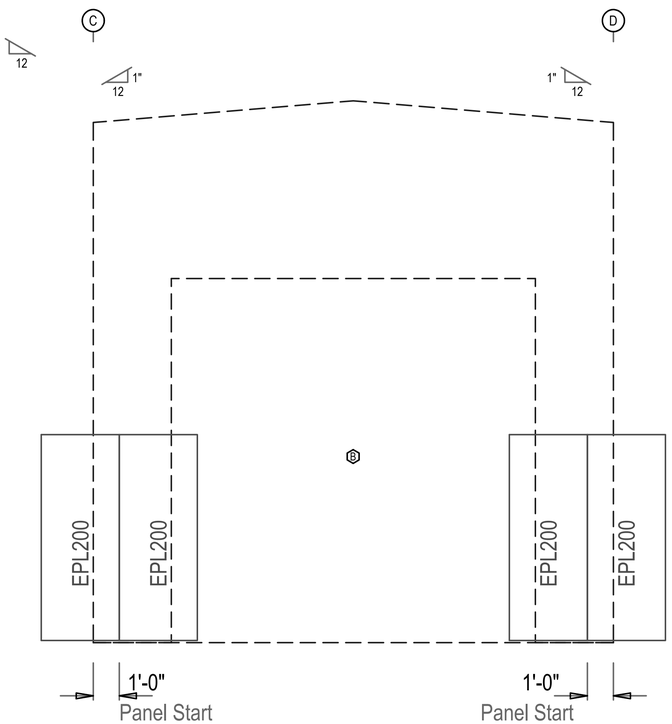

ENDWALL LINER SHEETING: FRAME LINE 8

PANELS: 29 Ga. RL -

DEVELOPED BY:

ClearSpan

ENGINEERING SERVICES & PRODUCTS CO.
1440 18TH AVENUE SW
DYERSVILLE, IA 52040
P:563.875.6113
WWW.ESAPCO.COM
WWW.CLEARSPAN.COM

ORDER #: 7878201

CUSTOMER #: 9108797

PROFESSIONAL SEAL

REV.	DESCRIPTION	CK'D	APP	DATE
5	SEISMIC DESIGN CAT. UPDATES DWG.–NO.C2			2/3
4	UPDATED PER CHANGER ORDER #3			1/23
3	BUILDING SITE CLASS UPDATES DWG.–NO.C2			8/7
2	UPDATED TITLE BLOCK AND BASE PLATE			5/21
1	BUILDING "A" BASE PLATE UPDATES			3/7

PUBLIC WORKS DEPARTMENT ENGINEERING DIVISION
CITY OF SAN BUENAVENTURA

FIRE STATION NO. 7

PARTITION WALL ELEVATION

DRN. BY: LJO | DES. BY: XXX | CK'D. BY: XXX

PRINCIPAL ENGINEER — DATE: 5 May 2026

CITY ENGINEER — DATE: 5/7/2026

SPEC. NUMBER 2025-010 | PROJECT NUMBER FA11-1061

March 27, 2026 | SHEET 63 OF 151 | DWG. NO. 2025-D-010

FOR REFERENCE ONLY

GENERAL NOTES:

1. THE ENTIRE BUILDING SHALL BE PROTECTED WITH A FIRE ALARM SYSTEM INSTALLED IN ACCORDANCE WITH THE 2022 EDITION OF CBC, THE 2022 EDITION OF THE CFC, 2022 EDITION OF NFPA 72, AND THE CITY OF VENTURA FIRE DEPARTMENT STANDARDS.
2. ALL NEW FIRE ALARM SYSTEM EQUIPMENT SHALL BE U.L. APPROVED.
3. ALL CONDUIT TO BE 1" UNLESS OTHERWISE SPECIFIED.
4. ALL WIRE WILL BE 18 AWG THHN, 14 AWG THHN, OR 12 AWG THHN, 600V, AND WILL BE RUN IN CONDUIT.
5. VERTICAL SUPPORT FOR CONDUCTORS IN A RACEWAY WILL BE PROVIDED.
6. ALL ELECTRICAL WORK ABOVE 24VDC WILL BE DONE BY ELECTRICAL CONTRACTOR.
7. WIRING SHALL NOT BE LOOPED THROUGH DEVICES; WIRE MUST BE CUT FOR IN AND OUT.
8. ALL JUNCTION BOXES SHALL BE SIZED IN ACCORDANCE WITH THE N.E.C. AND SHALL HAVE THEIR COVERS PAINTED RED.
9. OUTDOOR CONTROL VALVES SHALL BE PROVIDED WITH TAMPER SWITCHES.
10. ALL EXTERIOR MOUNTED EQUIPMENT SHALL BE LISTED AS WEATHERPROOF INCLUDING BUT NOT LIMITED TO, VISUAL, AUDIO, SUPERVISORY AND INITIATING DEVICES. THEY SHALL BE NOTED ON THE PRINT WITH "WP" DESIGNATION FOR WEATHERPROOF. THEIR ELECTRICAL TERMINATION COUNTER PARTS SHALL ALSO BE LISTED AS SUCH AND ALSO NOTED IN THE JOB SPECIFICATIONS.
11. UPON COMPLETION OF THE INSTALLATION OF THE FIRE ALARM SYSTEM, A SATISFACTORY TEST OF THE ENTIRE SYSTEM SHALL BE MADE IN THE PRESENCE OF THE AUTHORITY HAVING JURISDICTION.
12. A MINIMUM OF 48 HOURS NOTICE SHALL BE REQUIRED FOR ANY INSPECTION AND/OR TESTING.
13. FIRE ALARM DRAWINGS ARE SCHEMATIC IN NATURE ONLY. CONTRACTOR TO ROUTE CONDUIT AS FIELD CONDITIONS ALLOW.
14. THE ELECTRICAL CONTRACTOR SHALL COORDINATE ALL FIELD CHANGES WITH COLLINGS & ASSOCIATES. WIRING AND SYSTEM SOFTWARE ARE DIRECTLY AFFECTED BY THE CONDUIT RUNS SHOWN. IF CONDITIONS REQUIRE CHANGES TO THE CONDUIT RUNS INDICATED ON THESE PRINTS, PLEASE CONTACT COLLINGS & ASSOCIATES TO COORDINATE THE CHANGES. PROBLEMS CAUSED BY UNDOCUMENTED OR UNCOORDINATED CHANGES WILL NOT BE THE RESPONSIBILITY OF COLLINGS & ASSOCIATES.
15. ALL JUNCTION BOXES TO BE PAINTED RED.
16. THE CONTRACTOR SHALL BE A FACTORY-AUTHORIZED REPRESENTATIVE IN ORDER TO PERFORM ANY WORK ON THE FIRE ALARM SYSTEM. PROVIDE A RECORD COPY OF THE SITE SPECIFIC SOFTWARE AT THE TIME OF FINAL ACCEPTANCE TESTING IN ACCORDANCE WITH NFPA 72. PROVIDE SECURITY PASSWORD/CODE TO ALLOW AUTHORIZED TECHNICIANS TO MODIFY THE SOFTWARE DATABASE. A FACTORY DEFAULT PASSWORD/CODE IS ACCEPTABLE. ALL CABINET LOCK KEY TYPES SHALL BE "T45" AND SHALL BE APPROVED BY THE PUBLIC WORKS DEPARTMENT.

GENERAL NOTES (CONT.):

17. LOCK ON BREAKER AND A DEDICATED EMERGENCY PANEL AT THE SERVICE ENTRANCE FOR ALL FIRE PROTECTION SERVICE POWER SHALL BE PROVIDED. ELECTRICAL POWER SERVICE SHALL BE ON A DEDICATED BRANCH CIRCUIT. THE CIRCUIT AND CONNECTORS SHALL BE MECHANICALLY PROTECTED. CIRCUIT DISCONNECTING MEANS SHALL HAVE A RED MARKING, SHALL HAVE A LISTED BREAKER LOCKING DEVICE, SHALL BE ACCESSIBLE ONLY TO AUTHORIZED PERSONNEL, AND SHALL BE IDENTIFIED AS "FIRE ALARM CIRCUIT CONTROL". THE LOCATION OF THE CIRCUIT DISCONNECTING MEANS SHALL BE PERMANENTLY IDENTIFIED AT THE FIRE ALARM CONTROL PANEL.
18. SELECTED LICENSED C10 CONTRACTOR SHALL PROVIDE A UL LISTED CENTRAL MONITORING STATION.
19. CONDUIT OF THE FIRE ALARM SYSTEM MAY JOIN IN THE SAME LOCATION AS THE OPTIC FIBER CONDUIT MAIN.

APPLICABLE CODES:

- 2022 CALIFORNIA FIRE CODE
- 2022 CALIFORNIA BUILDING CODE
- 2022 NFPA 72 NATIONAL FIRE ALARM AND SIGNALING CODE
- 2022 NFPA 13 STANDARD FOR THE INSTALLATION OF SPRINKLER SYSTEMS
- 2020 NFPA 70 NATIONAL ELECTRICAL CODE

ABBREVIATIONS:

AFF	ABOVE FINISHED FLOOR
APN	ASSESSOR'S PARCEL NUMBER
CKT	CIRCUIT
FA	FIRE ALARM
FACU	FIRE ALARM CONTROL UNIT
FS	FLOW SWITCH
ITM	INSPECTION, TESTING, AND MAINTENANCE
NAC	NOTIFICATION APPLIANCE CIRCUIT
NEC	NATIONAL ELECTRICAL CODE
NFPA	NATIONAL FIRE PROTECTION ASSOCIATION
OS&Y	OUTSIDE SCREW & YOKE
SLC	SIGNALING LINE CIRCUIT
TS	TAMPER SWITCH
TYP	TYPICAL

PROJECT INFORMATION:

ADDRESS:	2269 ALESSANDRO DRIVE VENTURA, CA 93001
OCCUPANCY:	B, R-2, S-2
CONSTRUCTION TYPE:	IIB
STORIES:	1
BUILDING HEIGHT:	19'-8" TO TOP OF RIDGE
BUILDING AREA:	APPROX. 8,780 SF

PATHWAY SURVIVABILITY LEVEL 1

SCOPE OF WORK:

PROVIDE NEW FIRE ALARM SYSTEM WITH OCCUPANT NOTIFICATION THROUGHOUT THE NEW CITY OF VENTURA FIRE STATION 7. CABLE AND JUNCTION BOXES IN MODULAR BUILDINGS TO BE PROVIDED BY MODULAR BUILDING VENDOR DURING BUILD OUT.

OPERATIONAL MATRIX

SYSTEM OUTPUTS

		A	B	C	D	E	F	G	H	I	J	K	L	O	N	M	P	Q	R	S
		ACTIVATE BUILDING NOTIFICATION DEVICES					FIRE ALARM CONTROL PANEL ALARM	FIRE ALARM CONTROL PANEL TROUBLE	FIRE ALARM CONTROL PANEL SUPERVISORY		OFF SITE ALARM	OFF SITE TROUBLE	OFF SITE SUPERVISORY		ACTIVATE BUILDING SPRINKLER BELL					
SYSTEM INPUTS	1 CONTROL EQUIPMENT SMOKE DETECTION	●					●				●									
	2 AREA SMOKE DETECTOR	●					●				●									
	3 SPRINKLER WATERFLOW SWITCH	●					●				●				●					
	4 SPRINKLER CONTROL VALVE TAMPER SWITCH								●				●							
	5																			
	6																			
	7																			
	8																			
	9																			
	10																			
	11 FIRE ALARM AC POWER FAILURE							●				●								
	12 FIRE ALARM SYSTEM LOW BATTERY							●				●								
	13																			
	SIGNALING LINE CIRCUIT (CLASS B) SURVIVABILITY LEVEL 1																			
	14 OPEN WIRE							●				●								
	15 GROUNDED WIRE							XR				XR								
	16 SHORTED WIRE	●						●				●								
	17																			
	NOTIFICATION CIRCUIT (CLASS B) SURVIVABILITY LEVEL 1																			
	18 OPEN WIRE							●				●								
	19 GROUNDED WIRE							XR				XR								
	20 SHORTED WIRE							●				●								
		A	B	C	D	E	F	G	H	I	J	K	L	M	N	M	P	Q	R	S

XR = ALARM RECEIPT CAPABILITY DURING ABNORMAL CONDITIONS REQUIRED FOR GROUNDED WIRES

CABLE AND WIRE LEGEND

LABEL	PART NO	APPLICATION	RESISTANCE MFT	AWG	DESCRIPTION
A	16/2 FPLR	SLC	4.89	16	2 COND. SOLID COPPER FPLR ADDRESSABLE
P	14/2 FPLP/R	AUX	3.07	14	2 COND. SOLID COPPER FPLP/R UNSHIELDED
V	14/2 FPLP/R	NAC	3.07	14	2 COND. SOLID COPPER FPLP/R ANALOG UNSHIELDED
Z	18/2 FPLP/R	IDC	7.77	18	2 COND. SOLID COPPER FPLP/R ANALOG UNSHIELDED

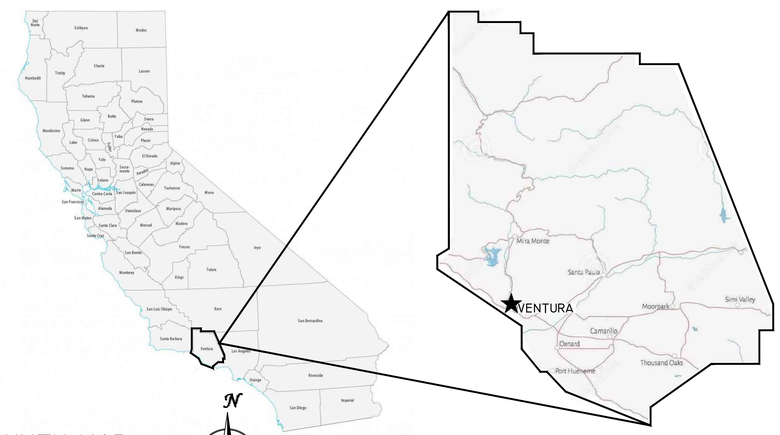

COUNTY MAP
NO SCALE

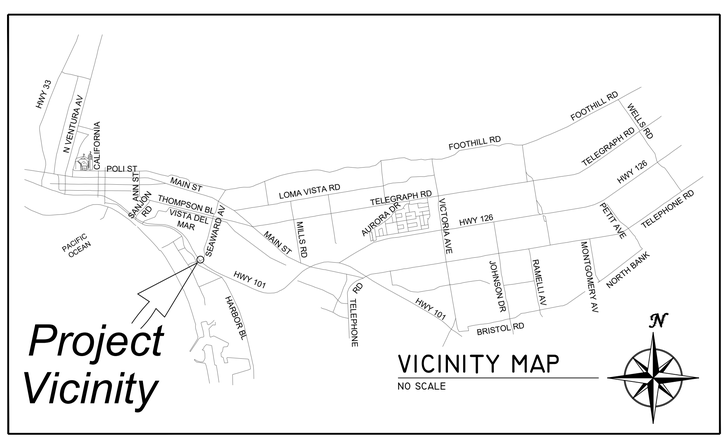

VICINITY MAP
NO SCALE

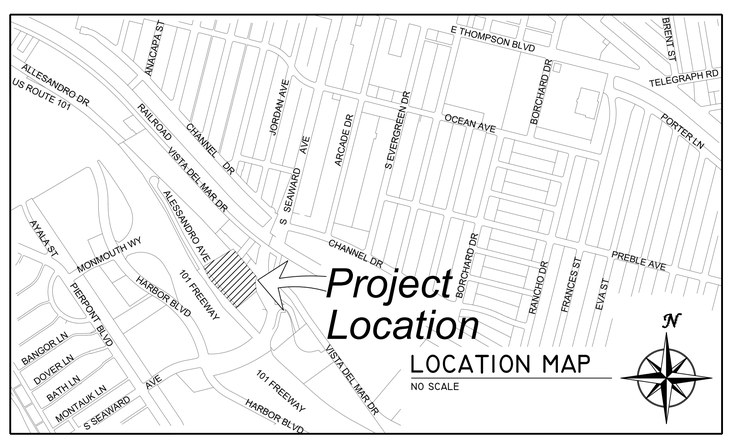

LOCATION MAP
NO SCALE

LICENSED PROFESSIONAL ENGINEER
DYED EDELMAN
FIRE PROTECTION
EXPIRES 6/30/2026
STATE OF CALIFORNIA

COLLINGS & ASSOCIATES
FIRE PROTECTION ENGINEERING
260 MAPLE COURT, 241 VENTURA, CA 93003
PHONE: (805)658-0003 FAX: (805)658-0044
www.collingsandassociates.com

REV.	DESCRIPTION	CK'D	APP	DATE

PUBLIC WORKS DEPARTMENT ENGINEERING DIVISION
CITY OF SAN BUENAVENTURA

FIRE STATION NO. 7
FIRE ALARM GENERAL NOTES

DRN. BY: BF	DES. BY: BF	CK'D. BY: AY

PRINCIPAL ENGINEER — DATE: 5 May 2026
CITY ENGINEER — DATE: 5/7/2026

SPEC. NUMBER 2025-010 | PROJECT NUMBER FA11-1061

October 1, 2025 | SHEET 64 OF 151 | DWG. NO. 2025-D-010

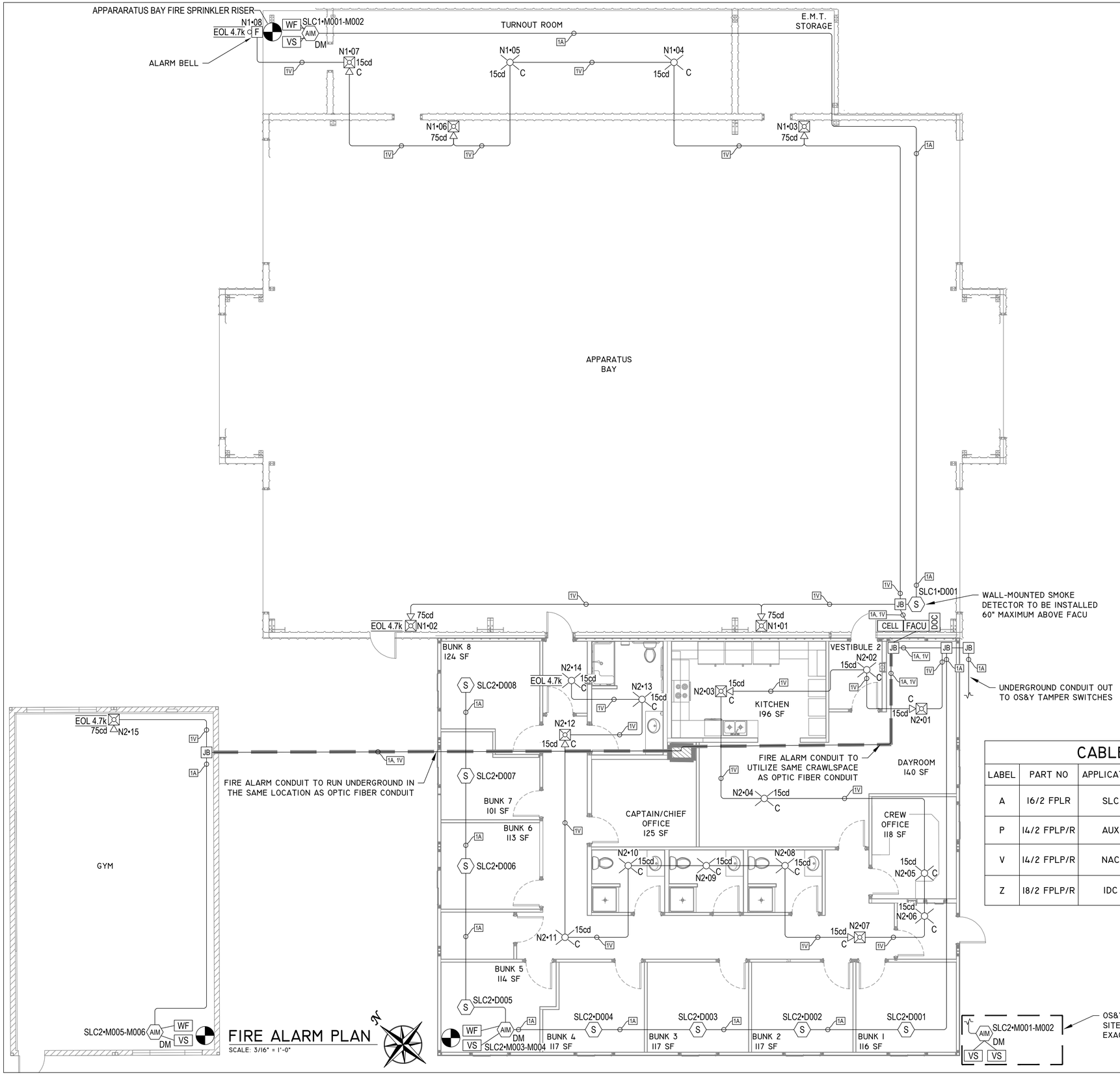

FIRE ALARM PLAN

SCALE: 3/16" = 1'-0"

DEVICE LEGEND

SYMBOL	QTY.	MANUFACTURER	PART NO	DESCRIPTION	CSFM
FACU	1	NOTIFIER	NI6E	FIRE ALARM CONTROL PANEL	7165-0028:0516
	1	NOTIFIER	PMB-AUX	ADDRESSABLE POWER SUPPLY/BATTERY CHARGER	7165-0028:0516
	2	NOTIFIER	SLM-318	SIGNALING LINE MODULE PROVIDES A SIGNALING LINE CIRCUIT OF 159 ADDRESSABLE POINTS.	7165-0028:0516
CELL	1	HONEYWELL	HON-CGW-MBB	CLSS GATEWAY	7300-1637:0504
	1	HONEYWELL	CCM-VZ-HON	LTE CELLULAR COMMUNICATION MODULE	7300-1637:0504
DOC	1	SPACE AGE ELECTRONICS	SSU00689	FIRE ALARM DOCUMENT BOX	7300-0553:0110
AIM DM	3	NOTIFIER	FDM-1	ADDRESSABLE DUAL MONITOR MODULE W/ FLASHSCAN, 2 CLASS B	7300-0028:0219
S	9	NOTIFIER	FSP-951 W/B300-6	ADDRESSABLE LOW-PROFILE PHOTOELECTRIC SMOKE DETECTOR. FLASHSCAN ONLY.	7272-0028:0503 7300-1653:0109
C	11	SYSTEM SENSOR	SCWLED	STROBE, CEILING, WHITE	7300-1653:0525
	5	SYSTEM SENSOR	P2RLED	HORN STROBE, RED	7135-1653:0526
C	5	SYSTEM SENSOR	PC2WLED	HORN STROBE, CEILING, WHITE	7135-1653:0526
JB	JUNCTION BOX				
WF	WATERFLOW SWITCH (PROVIDED BY C-16 CONTRACTOR)				
VS	TAMPER SWITCH (PROVIDED BY C-16 CONTRACTOR)				
F	ALARM BELL (PROVIDED BY C-16 CONTRACTOR)				

CABLE AND WIRE LEGEND

LABEL	PART NO	APPLICATION	RESISTANCE MFT	AWG	DESCRIPTION
A	16/2 FPLR	SLC	4.89	16	2 COND. SOLID COPPER FPLR ADDRESSABLE
P	14/2 FPLP/R	AUX	3.07	14	2 COND. SOLID COPPER FPLP/R UNSHIELDED
V	14/2 FPLP/R	NAC	3.07	14	2 COND. SOLID COPPER FPLP/R ANALOG UNSHIELDED
Z	18/2 FPLP/R	IDC	7.77	18	2 COND. SOLID COPPER FPLP/R ANALOG UNSHIELDED

COLLINGS & ASSOCIATES
FIRE PROTECTION ENGINEERING
260 MAPLE COURT, 241 VENTURA, CA 93003
PHONE: (805)658-0003 FAX: (805)658-0044
www.collingsandassociates.com

REV.	DESCRIPTION	CK'D	APP	DATE

PUBLIC WORKS DEPARTMENT ENGINEERING DIVISION

CITY OF SAN BUENAVENTURA

FIRE STATION NO. 7
FIRE ALARM PLAN

DRN. BY: BF | DES. BY: BF | CK'D. BY: AY

PRINCIPAL ENGINEER — DATE: 5 May 2026

CITY ENGINEER — DATE: 5/7/2026

SPEC. NUMBER 2025-010 | PROJECT NUMBER FA11-1061

October 1, 2025 | SHEET 65 OF 151 | DWG. NO. 2025-D-010

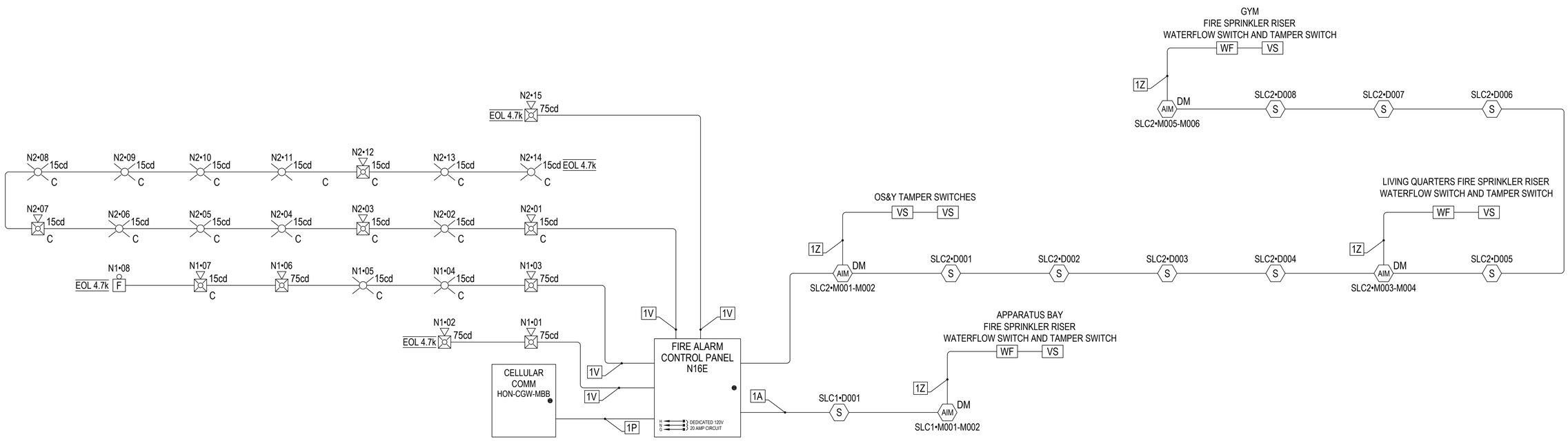

RISER DIAGRAM

NOT TO SCALE

CABLE AND WIRE LEGEND

LABEL	PART NO	APPLICATION	RESISTANCE MFT	AWG	DESCRIPTION
A	16/2 FPLR	SLC	4.89	16	2 COND. SOLID COPPER FPLR ADDRESSABLE
P	14/2 FPLP/R	AUX	3.07	14	2 COND. SOLID COPPER FPLP/R UNSHIELDED
V	14/2 FPLP/R	NAC	3.07	14	2 COND. SOLID COPPER FPLP/R ANALOG UNSHIELDED
Z	18/2 FPLP/R	IDC	7.77	18	2 COND. SOLID COPPER FPLP/R ANALOG UNSHIELDED

COLLINGS & ASSOCIATES
FIRE PROTECTION ENGINEERING
260 MAPLE COURT, 241 VENTURA, CA 93003
PHONE: (805)658-0003 FAX: (805)658-0044
www.collingsandassociates.com

REV.	DESCRIPTION	CK'D	APP	DATE

PUBLIC WORKS DEPARTMENT ENGINEERING DIVISION

CITY OF SAN BUENAVENTURA

FIRE STATION NO. 7
RISER DIAGRAM

DRN. BY: BF | DES. BY: BF | CK'D. BY: AY

PRINCIPAL ENGINEER — DATE: 5 May 2026

CITY ENGINEER — DATE: 5/7/2026

SPEC. NUMBER 2025-010 | PROJECT NUMBER FA11-1061

October 1, 2025 | SHEET 66 OF 151 | DWG. NO. 2025-D-010

PANEL (N16E) BATTERY CALCULATION

(SECONDARY POWER SOURCE REQUIREMENTS)

PANEL COMPONENTS

QTY	PART NO.	DESCRIPTION	STANDBY CURRENT CURRENT DRAW (A)	STANDBY CURRENT TOTAL (A)	SECONDARY ALARM CURRENT CURRENT DRAW (A)	SECONDARY ALARM CURRENT TOTAL (A)
1	N16E	INTELLIGENT FIRE ALARM PANEL WITH ONE SLC LOOP, 10" TOUCHSCREEN DISPLAY, 4 NACS, AND POWER SUPPLY IN A BLACK ENCLOSURE.	0	0	0	0
1	CPU-N16LD	N16X WITH DISPLAY. INTELLIGENT FIRE ALARM WITH ONE SLC LOOP, 10" TOUCHSCREEN DISPLAY, 4 NACS, AND POWER SUPPLY; CHASSIS MOUNTED FOR USE IN A CAB-5 SERIES CABINET.	0.269	0.269	0.279	0.279
1	PMB-AUX	ADDRESSABLE POWER SUPPLY/BATTERY CHARGER	0.096	0.096	0.11	0.11
2	SLM-318	SIGNALING LINE MODULE PROVIDES A SIGNALING LINE CIRCUIT OF 159 ADDRESSABLE POINTS. ADD SLM-318 UNITS TO EXPAND SLC CAPABILITY. SEE DN-62115.	0.159	0.318	0.276	0.5520

CIRCUIT	MAX CARD AMPS	USED CARD AMPS	SPARE CARD AMPS	SYMBOL	QTY	PART NO	DESCRIPTION	CURRENT DRAW (A)	TOTAL (A)	CURRENT DRAW (A)	TOTAL (A)
AUX1	6	0.879500	5.120500	CELL	1	HON-CGW-MBB	CLSS GATEWAY WITH THE ENCLOSURE	0	0	0	0
N1					4	P2RLED	2-WIRE, HORN STROBE, RED 75CD	0	0	0.087	0.348
				C	1	PC2WLED	2-WIRE, HORN STROBE, CEILING, WHITE 15CD	0	0	0.035	0.035
				C	2	SCWLED	STROBE, CEILING, WHITE 15CD	0	0	0.018	0.036
				F	1	PROVIDED BY C-16 CONTRACTOR	ALARM BELL	0	0	0.0535	0.0535
N2					1	P2RLED	2-WIRE, HORN STROBE, RED 75CD	0	0	0.087	0.087
				C	4	PC2WLED	2-WIRE, HORN STROBE, CEILING, WHITE 15CD	0	0	0.035	0.14
				C	10	SCWLED	STROBE, CEILING, WHITE 15CD	0	0	0.018	0.18
L2	N/A	0.055200		AIM DM	3	FDM-1	ADDRESSABLE DUAL MONITOR MODULE W/ FLASHSCAN, 2 CLASS B	0.00075	0.00225	0.0064	0.0192
				S	8	FSP-951 W/B300-6	ADDRESSABLE LOW-PROFILE PHOTOELECTRIC SMOKE DETECTOR. FLASHSCAN ONLY.	0.0002	0.0016	0.0045	0.036
L1	N/A	0.010900		AIM DM	1	FDM-1	ADDRESSABLE DUAL MONITOR MODULE W/ FLASHSCAN, 2 CLASS B	0.00075	0.00075	0.0064	0.0064
				S	1	FSP-951 W/B300-6	ADDRESSABLE LOW-PROFILE PHOTOELECTRIC SMOKE DETECTOR. FLASHSCAN ONLY.	0.0002	0.0002	0.0045	0.0045
								TOTAL STANDBY (A)	0.68780	TOTAL ALARM (A)	1.89
								REQUIRED STANDBY TIME (HOURS)		24	
								REQUIRED ALARM TIME (MINUTES)		5	
SECONDARY STANDBY LOAD (A)							0.68780	24		16.51	
SECONDARY ALARM LOAD (A)							1.89	0.083		0.157	
STANDBY AND ALARM SUBTOTAL (AMP HOURS)								16.66			
DERATING FACTOR								1.25			
SECONDARY LOAD REQUIREMENTS (AMP HOURS)								20.83			
PROVIDE (2) 12V 26AH BATTERIES											
*BATTERY BOX SIZE CAPACITY NOT SPECIFIED. REFER TO MANUFACTURER DOCUMENTATION.											

COLLINGS & ASSOCIATES
FIRE PROTECTION ENGINEERING
260 MAPLE COURT, 241 VENTURA, CA 93003
PHONE: (805)658-0003 FAX: (805)658-0044
www.collingsandassociates.com

REV.	DESCRIPTION	CK'D	APP	DATE

PUBLIC WORKS DEPARTMENT ENGINEERING DIVISION

CITY OF SAN BUENAVENTURA

FIRE STATION NO. 7

BATTERY CALCULATIONS

DRN. BY: BF | DES. BY: BF | CK'D. BY: AY

PRINCIPAL ENGINEER — DATE: 5 May 2026

CITY ENGINEER — DATE: 5/7/2026

SPEC. NUMBER 2025-010 | PROJECT NUMBER FA11-1061

October 1, 2025 | SHEET 67 OF 151 | DWG. NO. 2025-D-010

LICENSED PROFESSIONAL ENGINEER — D. TED EDELMAN — FIRE PROTECTION — STATE OF CALIFORNIA — EXPIRES 6/30/2026

AUX1 VOLTAGE DROP REPORT

CURRENT SUMMARY		POWER SUMMARY	
MAX. CIRCUIT CURRENT (A):	1.50	STARTING CALC. VOLTAGE:	20.40
TOTAL CIRCUIT CURRENT (A):	0	MAX. VOLTAGE DROP:	0
SPARE CIRCUIT CURRENT (A):	1.50	VOLTAGE DROP %:	**0.00 %**
SPARE CIRCUIT CURRENT %:	**100.00 %**	MIN. OPERATIONAL VOLTAGE:	16
MAX. CARD CURRENT (A):	6	END OF LINE VOLTAGE:	20.40
TOTAL CARD CURRENT (A):	0.87950	WIRE RESISTANCE (Ω/KFT):	3.07
SPARE CARD CURRENT (A):	5.12	TOTAL CIRCUIT LENGTH (FT):	3
SPARE CARD CURRENT %:	**85.34 %**	TOTAL CIRCUIT RESISTANCE (Ω):	0.020083

CIRCUIT WIRING PROPERTIES: 'P' 14/2 FPLP/R AUX 14 AWG, 2 COND. SOLID COPPER FPLP/R UNSHIELDED

DISTANCE MEASURED USING DRAWN SEGMENT LENGTHS WITH 10.00 % ADDITIONAL LENGTH CALCULATED

SYMBOL	QUANTITY	PART NO	DESCRIPTION	CANDELAS	ALARM CURRENT (A)	TOTAL CURRENT (A)
CELL	1	HON-CGW-MBB	CLSS GATEWAY WITH THE ENCLOSURE		0	0

CALCULATION METHODS:

TOTAL RESISTANCE (Ω) = WIRE RESISTANCE (Ω/FT) X 2 X TOTAL CIRCUIT LENGTH (FT)

TOTAL VOLTAGE DROP = TOTAL RESISTANCE (Ω) X TOTAL CIRCUIT CURRENT (A)

N1 VOLTAGE DROP REPORT

CURRENT SUMMARY		POWER SUMMARY	
MAX. CIRCUIT CURRENT (A):	1.50	STARTING CALC. VOLTAGE:	20.40
TOTAL CIRCUIT CURRENT (A):	0.4725	MAX. VOLTAGE DROP:	0.790
SPARE CIRCUIT CURRENT (A):	1.03	VOLTAGE DROP %:	**3.87 %**
SPARE CIRCUIT CURRENT %:	**68.50 %**	MIN. OPERATIONAL VOLTAGE:	16
MAX. CARD CURRENT (A):	6	END OF LINE VOLTAGE:	19.61
TOTAL CARD CURRENT (A):	0.87950	WIRE RESISTANCE (Ω/KFT):	3.07
SPARE CARD CURRENT (A):	5.12	TOTAL CIRCUIT LENGTH (FT):	272
SPARE CARD CURRENT %:	**85.34 %**	TOTAL CIRCUIT RESISTANCE (Ω):	1.67

CIRCUIT WIRING PROPERTIES: 'V' 14/2 FPLP/R NAC 14 AWG, 2 COND. SOLID COPPER FPLP/R ANALOG UNSHIELDED

DISTANCE MEASURED USING DRAWN SEGMENT LENGTHS WITH 10.00 % ADDITIONAL LENGTH CALCULATED

SYMBOL	QUANTITY	PART NO	DESCRIPTION	CANDELAS	ALARM CURRENT (A)	TOTAL CURRENT (A)
	4	P2RLED	2-WIRE, HORN STROBE, RED	75CD	0.087	0.348
C	1	PC2WLED	2-WIRE, HORN STROBE, CEILING, WHITE	15CD	0.035	0.035
C	2	SCWLED	STROBE, CEILING, WHITE	15CD	0.018	0.036
F	1	PROVIDED BY C-16 CONTRACTOR	ALARM BELL		0.0535	0.0535

CALCULATION METHODS:

TOTAL RESISTANCE (Ω) = WIRE RESISTANCE (Ω/FT) X 2 X TOTAL CIRCUIT LENGTH (FT)

TOTAL VOLTAGE DROP = TOTAL RESISTANCE (Ω) X TOTAL CIRCUIT CURRENT (A)

N2 VOLTAGE DROP REPORT

CURRENT SUMMARY		POWER SUMMARY	
MAX. CIRCUIT CURRENT (A):	1.50	STARTING CALC. VOLTAGE:	20.40
TOTAL CIRCUIT CURRENT (A):	0.407	MAX. VOLTAGE DROP:	0.690
SPARE CIRCUIT CURRENT (A):	1.09	VOLTAGE DROP %:	**3.38 %**
SPARE CIRCUIT CURRENT %:	**72.87 %**	MIN. OPERATIONAL VOLTAGE:	16
MAX. CARD CURRENT (A):	6	END OF LINE VOLTAGE:	19.71
TOTAL CARD CURRENT (A):	0.87950	WIRE RESISTANCE (Ω/KFT):	3.07
SPARE CARD CURRENT (A):	5.12	TOTAL CIRCUIT LENGTH (FT):	276
SPARE CARD CURRENT %:	**85.34 %**	TOTAL CIRCUIT RESISTANCE (Ω):	1.70

CIRCUIT WIRING PROPERTIES: 'V' 14/2 FPLP/R NAC 14 AWG, 2 COND. SOLID COPPER FPLP/R ANALOG UNSHIELDED

DISTANCE MEASURED USING DRAWN SEGMENT LENGTHS WITH 10.00 % ADDITIONAL LENGTH CALCULATED

SYMBOL	QUANTITY	PART NO	DESCRIPTION	CANDELAS	ALARM CURRENT (A)	TOTAL CURRENT (A)
	1	P2RLED	2-WIRE, HORN STROBE, RED	75CD	0.087	0.087
C	4	PC2WLED	2-WIRE, HORN STROBE, CEILING, WHITE	15CD	0.035	0.14
C	10	SCWLED	STROBE, CEILING, WHITE	15CD	0.018	0.18

CALCULATION METHODS:

TOTAL RESISTANCE (Ω) = WIRE RESISTANCE (Ω/FT) X 2 X TOTAL CIRCUIT LENGTH (FT)

TOTAL VOLTAGE DROP = TOTAL RESISTANCE (Ω) X TOTAL CIRCUIT CURRENT (A)

LICENSED PROFESSIONAL ENGINEER PETER EDELMAN EXPIRES 06/30/2026 FIRE PROTECTION STATE OF CALIFORNIA

COLLINGS & ASSOCIATES
FIRE PROTECTION ENGINEERING
260 MAPLE COURT, 241 VENTURA, CA 93003
PHONE: (805)658-0003 FAX: (805)658-0044
www.collingsandassociates.com

REV.	DESCRIPTION	CK'D	APP	DATE

PUBLIC WORKS DEPARTMENT ENGINEERING DIVISION

CITY OF SAN BUENAVENTURA

FIRE STATION NO. 7

VOLTAGE DROP CALCULATIONS

DRN. BY: BF | DES. BY: BF | CK'D. BY: AY

PRINCIPAL ENGINEER — DATE: 5 May 2026

CITY ENGINEER — DATE: 5/7/2026

SPEC. NUMBER 2025-010 | PROJECT NUMBER FA11-1061

October 1, 2025 | SHEET 68 OF 151 | DWG. NO. 2025-D-010

TYPICAL INITIATING DEVICES CONNECTIONS

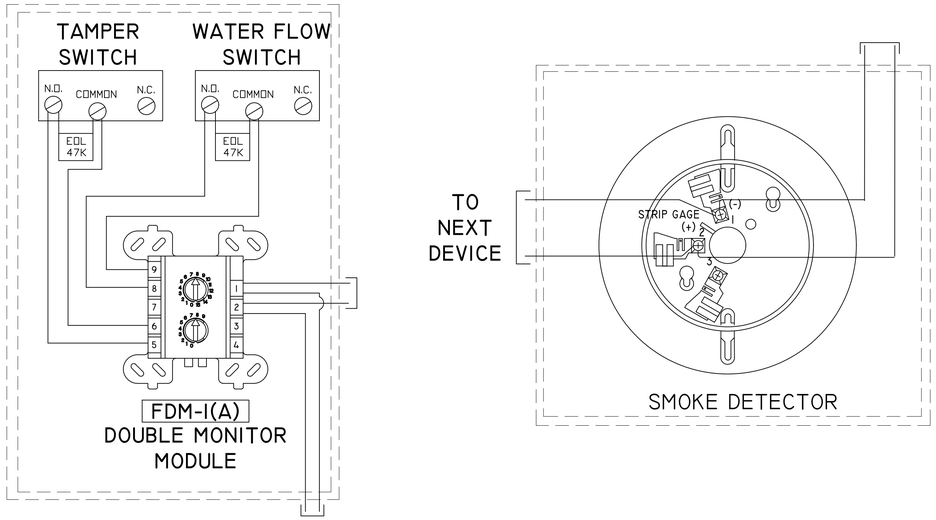

TYPICAL NOTIFICATION DEVICES CONNECTIONS

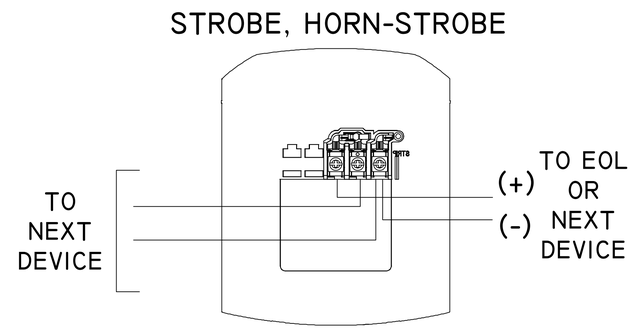

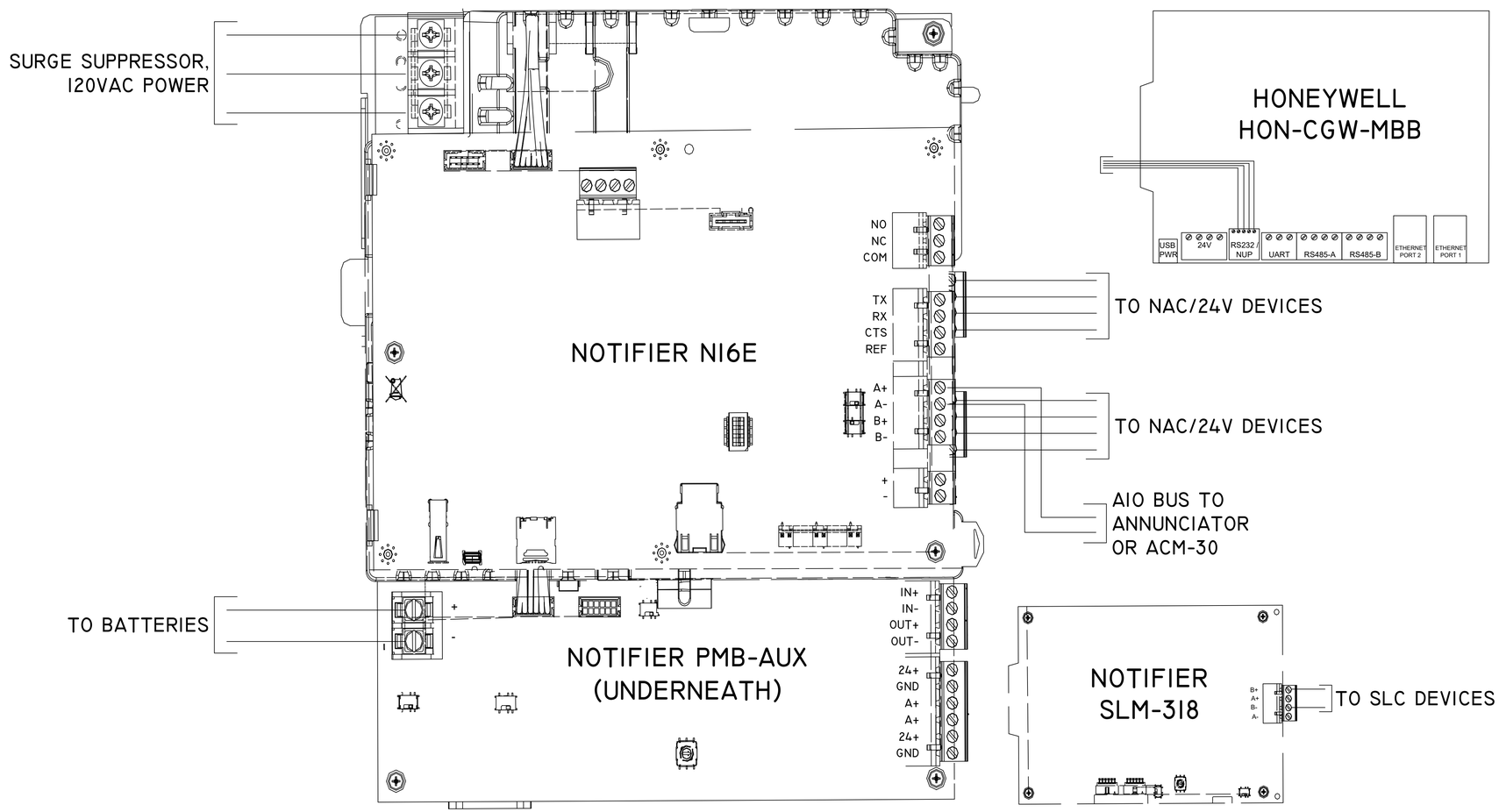

APPARATUS BAY

COLLINGS & ASSOCIATES
FIRE PROTECTION ENGINEERING
260 MAPLE COURT, 241 VENTURA, CA 93003
PHONE: (805)658-0003 FAX: (805)658-0044
www.collingsandassociates.com

REV.	DESCRIPTION	CK'D	APP	DATE

PUBLIC WORKS DEPARTMENT ENGINEERING DIVISION
CITY OF SAN BUENAVENTURA

FIRE STATION NO. 7
WIRING DIAGRAMS

DRN. BY: BF | DES. BY: BF | CK'D. BY: AY

PRINCIPAL ENGINEER — DATE: 5 May 2026

CITY ENGINEER — DATE: 5/7/2026

SPEC. NUMBER 2025-010 | PROJECT NUMBER FA11-1061

October 1, 2025 | SHEET 69 OF 151 | DWG. NO. 2025-D-010

Article 342 — Intermediate Metal Conduit (IMC)

Metric Designator	Trade Size	Over 2 Wires 40%		60%		1 Wire 53%		2 Wires 31%		Nominal Internal Diameter		Total Area 100%	
		mm²	in.²	mm²	in.²	mm²	in.²	mm²	in.²	mm	in.	mm²	in.²
12	⅜	—	—	—	—	—	—	—	—	—	—	—	—
16	½	89	0.137	133	0.205	117	0.181	69	0.106	16.8	0.660	222	0.342
21	¾	151	0.235	226	0.352	200	0.311	117	0.182	21.9	0.864	377	0.586
27	1	248	0.384	372	0.575	329	0.508	192	0.297	28.1	1.105	620	0.959
35	1¼	425	0.659	638	0.988	564	0.873	330	0.510	36.8	1.448	1064	1.647
41	1½	573	0.890	859	1.335	759	1.179	444	0.690	42.7	1.683	1432	2.225
53	2	937	1.452	1405	2.178	1241	1.924	726	1.125	54.6	2.150	2341	3.630
63	2½	1323	2.054	1985	3.081	1753	2.722	1026	1.592	64.9	2.557	3308	5.135
78	3	2046	3.169	3069	4.753	2711	4.199	1586	2.456	80.7	3.176	5115	7.922
91	3½	2729	4.234	4093	6.351	3616	5.610	2115	3.281	93.2	3.671	6822	10.584
103	4	3490	5.452	5235	8.179	4624	7.224	2705	4.226	105.4	4.166	8725	13.631
129	5	5455	8.528	8183	12.792	7229	11.30	4228	6.610	131.78	5.210	13639	21.32
155	6	7878	12.304	11817	18.456	10439	16.302	6106	9.536	158.36	6.258	19696	30.76

Articles 352 and 353 — Rigid PVC Conduit (PVC), Schedule 40, and HDPE Conduit (HDPE)

Metric Designator	Trade Size	Over 2 Wires 40%		60%		1 Wire 53%		2 Wires 31%		Nominal Internal Diameter		Total Area 100%	
		mm²	in.²	mm²	in.²	mm²	in.²	mm²	in.²	mm	in.	mm²	in.²
12	⅜	—	—	—	—	—	—	—	—	—	—	—	—
16	½	74	0.114	110	0.171	97	0.151	57	0.088	15.3	0.602	184	0.285
21	¾	131	0.203	196	0.305	173	0.269	101	0.157	20.4	0.804	327	0.508
27	1	214	0.333	321	0.499	284	0.441	166	0.258	26.1	1.029	535	0.832
35	1¼	374	0.581	561	0.872	495	0.770	290	0.450	34.5	1.360	935	1.453
41	1½	513	0.794	769	1.191	679	1.052	397	0.616	40.4	1.590	1282	1.986
53	2	849	1.316	1274	1.975	1126	1.744	658	1.020	52.0	2.047	2124	3.291
63	2½	1212	1.878	1817	2.817	1605	2.488	939	1.455	62.1	2.445	3029	4.695
78	3	1877	2.907	2816	4.361	2487	3.852	1455	2.253	77.3	3.042	4693	7.268
91	3½	2511	3.895	3766	5.842	3327	5.161	1946	3.018	89.4	3.521	6277	9.737
103	4	3237	5.022	4855	7.532	4288	6.654	2508	3.892	101.5	3.998	8091	12.554
129	5	5099	7.904	7649	11.856	6756	10.473	3952	6.126	127.4	5.016	12748	19.761
155	6	7373	11.427	11060	17.140	9770	15.141	5714	8.856	153.2	6.031	18433	28.567

Article 344 — Rigid Metal Conduit (RMC)

Metric Designator	Trade Size	Over 2 Wires 40%		60%		1 Wire 53%		2 Wires 31%		Nominal Internal Diameter		Total Area 100%	
		mm²	in.²	mm²	in.²	mm²	in.²	mm²	in.²	mm	in.	mm²	in.²
12	⅜	—	—	—	—	—	—	—	—	—	—	—	—
16	½	81	0.125	122	0.188	108	0.166	63	0.097	16.1	0.632	204	0.314
21	¾	141	0.220	212	0.329	187	0.291	109	0.170	21.2	0.836	353	0.549
27	1	229	0.355	344	0.532	303	0.470	177	0.275	27.0	1.063	573	0.887
35	1¼	394	0.610	591	0.916	522	0.809	305	0.473	35.4	1.394	984	1.526
41	1½	533	0.829	800	1.243	707	1.098	413	0.642	41.2	1.624	1333	2.071
53	2	879	1.363	1319	2.045	1165	1.806	681	1.056	52.9	2.083	2198	3.408
63	2½	1255	1.946	1882	2.919	1663	2.579	972	1.508	63.2	2.489	3137	4.866
78	3	1936	3.000	2904	4.499	2565	3.974	1500	2.325	78.5	3.090	4840	7.499
91	3½	2584	4.004	3877	6.006	3424	5.305	2003	3.103	90.7	3.570	6461	10.010
103	4	3326	5.153	4990	7.729	4408	6.828	2578	3.994	102.9	4.050	8316	12.882
129	5	5220	8.085	7830	12.127	6916	10.713	4045	6.266	128.9	5.073	13050	20.212
155	6	7528	11.663	11292	17.495	9975	15.454	5834	9.039	154.8	6.093	18821	29.158

1 CONDUIT TYPES WIRING FILL TABLES
TYPICAL INSTALLATION DETAIL
NOT TO SCALE

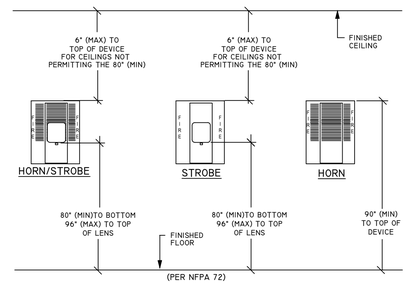

2 HORN/STROBE, HORN & STROBE
TYPICAL INSTALLATION DETAIL
NOT TO SCALE

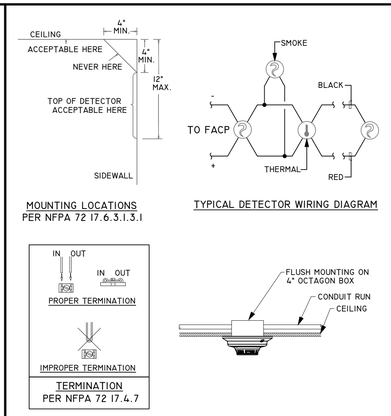

3 ADDRESSABLE DETECTOR MOUNTING
TYPICAL INSTALLATION DETAIL
NOT TO SCALE

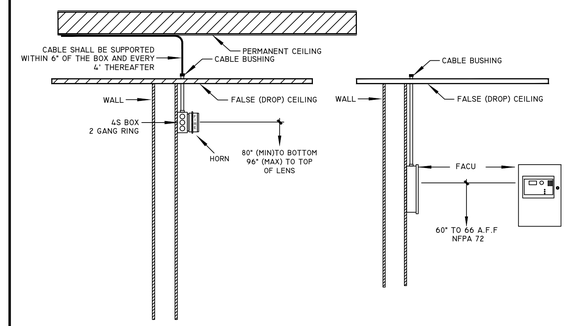

TYPICAL FACU & HORN SURFACE MOUNT INSTALLATION DETAIL

4 TYPICAL WALL MOUNT DEVICES
TYPICAL INSTALLATION DETAIL
NOT TO SCALE

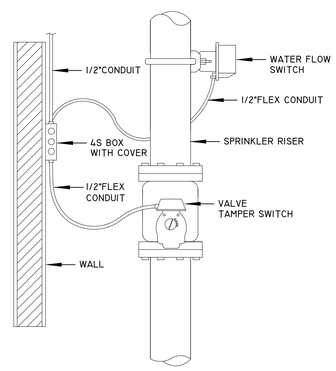

5 WATERFLOW AND VALVE TAMPERSWITCH
TYPICAL INSTALLATION DETAIL
NOT TO SCALE

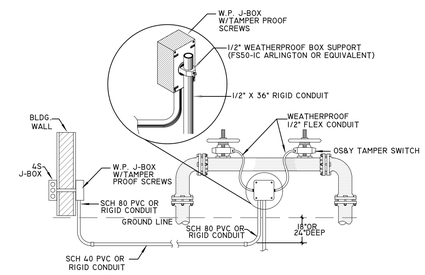

1. ALL CONDUIT SIZE WILL BE DETERMINED BY WIRE FILL
2. ALL ELECTRICAL BOXES WILL BE DETERMINED BY CONDUIT SIZE AND WIRE FILL.
3. ALL EXTERIOR WP BELL BOXES TO HAVE TAMPERPROOF SCREWS
4. WHERE CONDUIT IS PROVIDED BY ELECTRICAL CONTRACTOR (EC), SPRINKLER BELL WEATHER PROOF BACKBOX TO BE PROVIDED TO EC FOR INSTALLATION.

6 TAMPER SWITCH ON A OS&Y GATE VALVE
TYPICAL INSTALLATION DETAIL
NOT TO SCALE

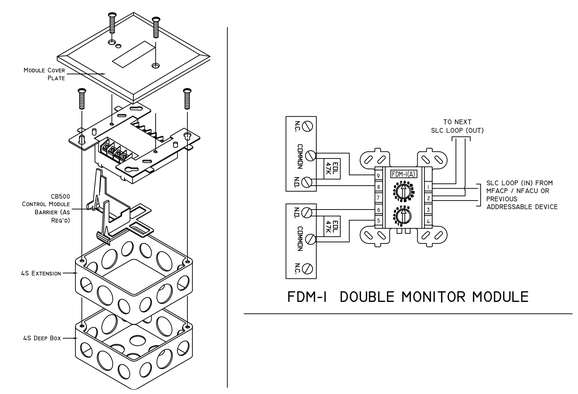

FDM-I DOUBLE MONITOR MODULE

7 FDM DOUBLE MONITOR MODULE
TYPICAL INSTALLATION DETAIL
NOT TO SCALE

COLLINGS & ASSOCIATES
FIRE PROTECTION ENGINEERING
260 MAPLE COURT, 241 VENTURA, CA 93003
PHONE: (805)658-0003 FAX: (805)658-0044
www.collingsandassociates.com

REV.	DESCRIPTION	CK'D	APP	DATE

PUBLIC WORKS DEPARTMENT ENGINEERING DIVISION
CITY OF SAN BUENAVENTURA

FIRE STATION NO. 7
DETAILS

DRN. BY: BF	DES. BY: BF	CK'D. BY: AY

PRINCIPAL ENGINEER — DATE: 5 May 2026
CITY ENGINEER — DATE: 5/7/2026

SPEC. NUMBER 2025-010 | PROJECT NUMBER FA11-1061

October 1, 2025 | SHEET 70 OF 151 | DWG. NO. 2025-D-010

LICENSED PROFESSIONAL ENGINEER — D. ED EDELMAN — FP-1862 — EXPIRES 6/30/2026 — FIRE PROTECTION — STATE OF CALIFORNIA

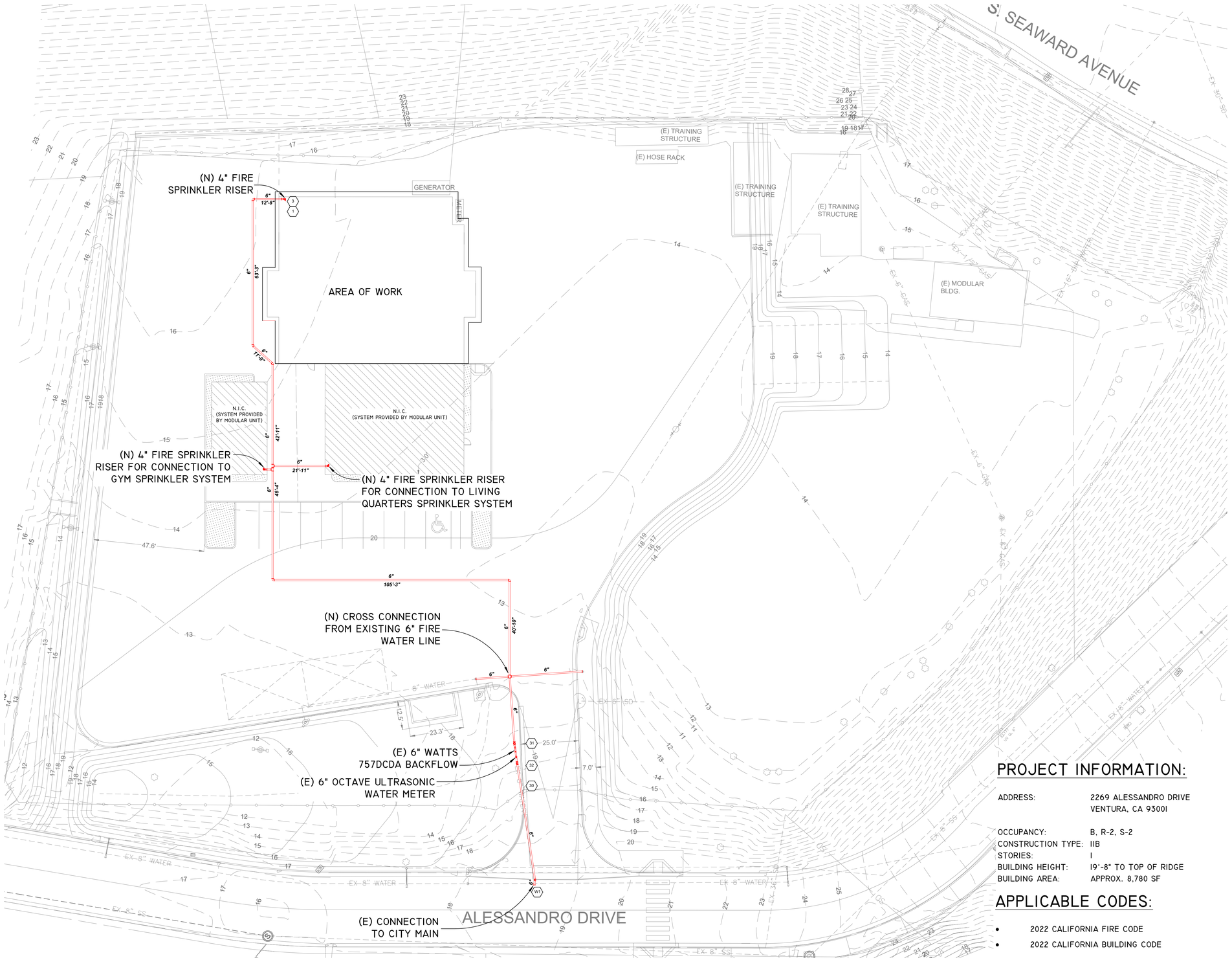

SITE PLAN
SCALE: 1" = 20'-0"

FLOW TEST:
STATIC @ 85 PSI
RESIDUAL @ 20 PSI
FLOW @ 3671 GPM

FIRE SPRINKLER NOTES

1. PROVIDE A COMPLETE, FUNCTIONING FIRE SPRINKLER SYSTEM DESIGNED AND INSTALLED IN ACCORDANCE WITH NFPA 13, 2022 EDITION. SYSTEM SHALL MEET ALL APPLICABLE REQUIREMENTS OF THE BUILDING CODE, FIRE CODE, AND AUTHORITY HAVING JURISDICTION.
2. APPROVAL PRIOR TO COMMENCING WORK, APPROVAL SHALL BE RECEIVED FROM THE OWNERS INSURANCE COMPANY, ENGINEER, FIRE MARSHAL AND OWNER. WORK COMMENCED PRIOR TO SHOP DRAWING REVIEW SHALL BE AT CONTRACTOR'S RISK.
3. ENGINEER PROVIDED DESIGN: THESE DOCUMENTS ARE INTENDED TO PROVIDE AND DESCRIBE A WORKING INSTALLATION COMPLETE IN DETAIL. ALL EQUIPMENT, COMPONENTS, AND LABOR REQUIRED FOR A COMPLETE INSTALLATION SHALL BE PROVIDED WHETHER OR NOT SPECIFICALLY MENTIONED HEREIN OR SHOWN ON THESE DRAWINGS. UNLESS INDICATED OTHERWISE, IT IS UNDERSTOOD THAT PIPE SIZES SHALL BE AS SHOWN ON DRAWINGS.
4. PIPING AND COORDINATION:
   - A. FIRE PROTECTION CONTRACTOR SHALL COORDINATE WITH OTHER DISCIPLINES FOR THE LOCATION OF ALL PIPING AND EQUIPMENT TO PREVENT INTERFERENCE. PROVIDE ALL NECESSARY OFFSETS IN PIPING TO AVOID CONFLICT. NO CHANGE TO THE CONTRACT PRICE WILL BE ACCEPTED WHERE ALTERNATE PIPING ROUTES ARE REQUIRED.
   - B. PIPING SHALL BE INSTALLED AS HIGH AS POSSIBLE IN OPEN STRUCTURE AREAS.
   - C. RENDER ANY PASSAGE OF PIPING THOUGH OUTSIDE WALLS PERMANENTLY WATERTIGHT.
   - D. PROVIDE SEISMIC BRACING AS REQUIRED FOR NEW PIPING. REFER TO BRACING DETAILS.
   - E. PROVIDE AUXILIARY DRAINS AS REQUIRED FOR DRAINING TRAPPED SECTIONS OF PIPING. FOR TRAPPED SECTIONS OF PIPING EXCEEDING 5 GALLONS IN CAPACITY, PROVIDE A HARD-PIPED DRAIN CONNECTION AND ROUTE BACK TO DRAIN IN SPRINKLER RISER ROOM OR ALTERNATE LOCATION APPROVED BY ENGINEER.
   - F. PIPES 2 INCH OR SMALLER TO BE SCHEDULE 40 STEEL PIPE WITH THREADED FITTINGS.
   - G. PIPES 2 ½ TO 8 INCH TO BE SCHEDULE #10 STEEL PIPE WITH GRVD ENDS.
5. IT IS THE RESPONSIBILITY OF THE ON-SITE SUPERVISOR TO MAINTAIN THE INTEGRITY OF THE SPRINKLER SYSTEM.
6. ONLY NEW SPRINKLERS SHALL BE EMPLOYED IN THE INSTALLATION OF THE SPRINKLER SYSTEM. UNLESS NOTED.
7. THE SYSTEM SHALL ONLY EMPLOY THE USE OF U.L. LISTED MATERIALS AND DEVICES.
8. SPRINKLERS AND PIPING LOCATIONS MAY VARY FROM ROOM TO ROOM DUE TO FIELD CONDITIONS.
9. ROUGH AND FINAL INSPECTION ARE REQUIRED ON ALL SYSTEMS.
10. FIRE DEPARTMENT CONNECTIONS SHALL BE VISIBLE, ACCESSIBLE, HAVE NST FEMALE OUTLETS & PROTECTIVE CAPS, AND AN APPROVED CHECK VALVE IN THE MAIN LINE (AS CLOSE TO THE FDC AS POSSIBLE).
11. A METAL CALCULATION PLATE INDICATING THE HIGHEST RESIDUAL PRESSURE REQUIRED FOR THE SYSTEM OPERATION SHALL BE PERMANENTLY ATTACHED TO THE RISER.

HANGER NOTES

1. 3/8" A.T.R. ROD SHALL BE USED ON PIPES 1 TO 4 INCHES.½" ATR FOR 5, 6 & 8 INCHES PIPE, AND 5/8" ATR FOR 10 & 12 INCHES PIPE.
2. THE MAX. UNSUPPORTED LENGTH FROM THE END OF A LINE TO HANGER SHALL BE 36" FOR 1", 48" FOR 1 ¼, 60" FOR 1 ½" PIPE AND ABOVE.
3. THE MAXIMUM HANGER SPACING SHALL BE 12 FT. FOR 1" TO 1 ¼" PIPE, 15 FT. FOR 1 ½" PIPE AND ABOVE EXCEPT THREADED LIGHT WALL. FOR THREADED LIGHT WALL MAXIMUM SPACING IS 12 FT. FOR PIPE UP TO 3 IN.(UNLESS NOTED OTHERWISE).
4. HANGERS ARE REQUIRED ON ARM-OVER EXCEEDING 2 FT. FROM CENTER -TO -CENTER.
5. ALL HANGERS SHALL BE IN ACCORDANCE WITH NFPA-13. TABLE 17.6.2.1(A). ALL ARM-OVER MORE THAN 2"-0 SHALL HAVE HANGER. IF STATIC PRESSURE EXCEEDS 100 PSI, HANGER IS REQUIRED ON ARM-OVER MORE THAN 1'-0".
6. RESTRAINT OF BRANCH LINES SHALL NOT APPLY TO PIPES INDIVIDUALLY SUPPORTED BY RODS LESS THAN 6 IN. LONG MEASURED BETWEEN THE TOP OF THE PIPE AND THE POINT OF ATTACHMENT TO THE BUILDING STRUCTURE. PER SEC. 18.6.5, NFPA 13, 2022 EDITION.

SEISMIC NOTES

1. SWAY BRACES SHALL BE DESIGNED AND INSTALLED IN COMPLIANCE WITH NFPA 13, 2022 EDITION. CALCULATION BASED ON ZONE OF INFLUENCE. (SEE DETAIL SHEET FOR SEISMIC BRACING CALCULATION)
2. LATERAL BRACE SHALL NOT APPLY WHERE U-TYPE HOOKS OF THE WRAP-AROUND TYPE OR THOSE U-TYPE HOOKS ARRANGED TO KEEP THE PIPE TIGHT TO THE UNDERSIDE OF THE STRUCTURE ELEMENT SHALL BE PERMITTED TO BE USED TO SATISFY THE REQUIREMENTS FOR LATERAL SWAY BRACE BRACING, PROVIDED THE LEGS ARE BENT OUT AT LEAST 30 DEGREES FROM THE VERTICAL. (SEC. 18.5.5.11.1)

SCOPE OF WORK

TO PROVIDE AND DESIGN NEW SPRINKLER PROTECTION THROUGHOUT THE NEW FIRE STATION 7 PER NFPA 13, 2022 EDITION AND VENTURA CITY FIRE DEPARTMENT.

ORDINARY HAZARD II
0.20 DENSITY OVER 1500^{2}FT
MINIMUM DESIGN AREA PER NFPA 13, 2022 EDITION

FIRE SPRINKLER LEGEND

	FIRE SPRINKLER RISER
	NEW SPRINKLER PENDENT
	NEW SPRINKLER UPRIGHT
	PIPE HANGER
	PIPE RESTRAINT
FW	UNDERGROUND FIRE WATER
	FLOW HYDRANT
BFP	BACKFLOW PREVENTER
	LATERAL SEISMIC BRACING
	LONGITUDINAL SEISMIC BRACING
	4-WAY SEISMIC BRACING

FIRE SPRINKLER INFORMATION

SYM.	MODEL	SIN	NPT	K	TEMP	DESCRIPTION	QTY.
○	FL-QR	V2704	1/2	5.6	165°	SPRINKLER UPRIGHT	66
△	FL-QR/SW	V2710	1/2	5.6	175°	SPRINKLER SIDEWALL FOR SECTIONAL DOORS	5

PROJECT INFORMATION:

ADDRESS: 2269 ALESSANDRO DRIVE
VENTURA, CA 93001

OCCUPANCY: B, R-2, S-2
CONSTRUCTION TYPE: IIB
STORIES: 1
BUILDING HEIGHT: 19'-8" TO TOP OF RIDGE
BUILDING AREA: APPROX. 8,780 SF

APPLICABLE CODES:

- 2022 CALIFORNIA FIRE CODE
- 2022 CALIFORNIA BUILDING CODE
- 2022 NFPA 13 STANDARD FOR THE INSTALLATION OF SPRINKLER SYSTEMS

REGISTERED PROFESSIONAL ENGINEER
TIM DEWITT EPELMAN
No. 1847
EXPIRES 6/30/2026
FIRE PROTECTION
STATE OF CALIFORNIA

REV.	DESCRIPTION	CK'D	APP	DATE

PUBLIC WORKS DEPARTMENT ENGINEERING DIVISION
CITY OF SAN BUENAVENTURA

FIRE STATION NO. 7
GENERAL NOTES AND SITE PLAN

DRN. BY: C&A | DES. BY: C&A | CK'D. BY:

PRINCIPAL ENGINEER — DATE: 5 May 2026

CITY ENGINEER — DATE: 5/7/2026

SPEC. NUMBER 2025-010 | PROJECT NUMBER FA11-1061

9-24-25 | SHEET 71 OF 151 | DWG. NO. 2025-D-010

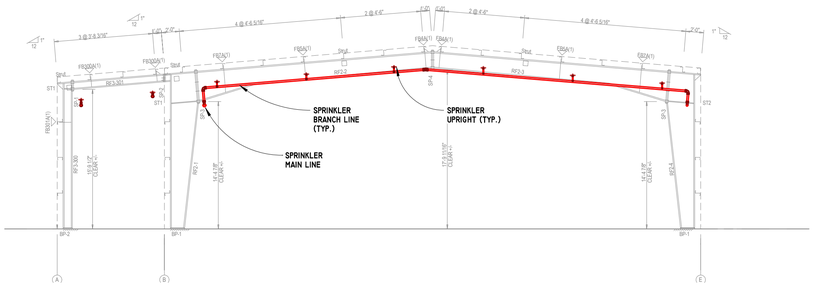

3 **Section 1**
SCALE: 1/8" = 1'-0"

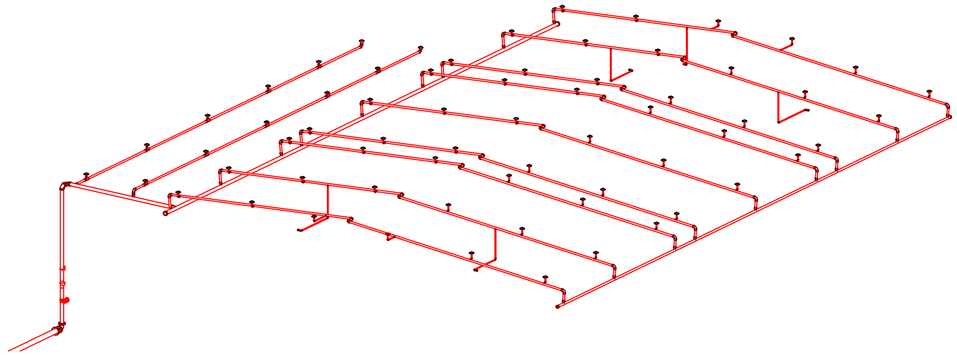

3D ISOMETRIC
NOT TO SCALE

HYDRAULIC INFORMATION	
Remote Area Name	RA1
Occupancy Classification	Ordinary Group II
Density	0.20 GPM
Total Hose Streams	250.00 GPM
Flowing Sprinklers	17 @ 24.00 GPM
K-Factor	5.6
Total Water Required	668.32 GPM
Total Pressure Required	48.70 psi
Base of Riser	418.32 GPM
Base of Riser	34.72 psi
Safety Margin	+33.52 (40.77%)

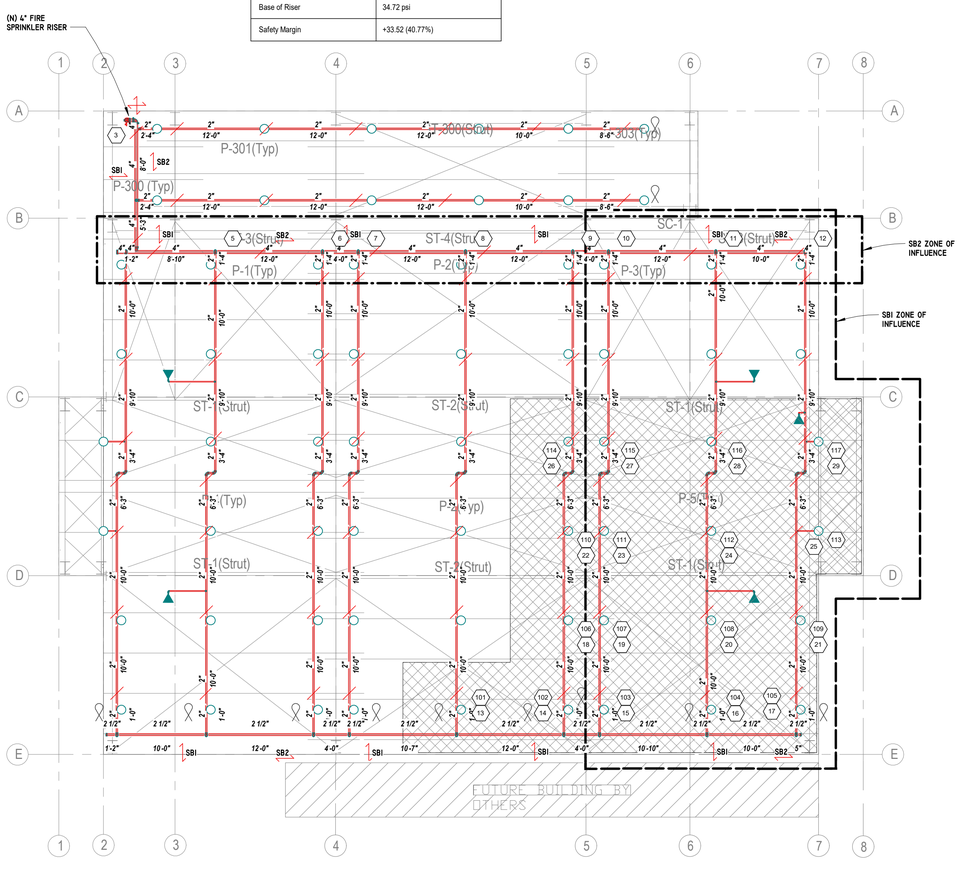

2 **FIRE SPRINKLER PIPING PLAN**
SCALE: 1/8" = 1'-0"

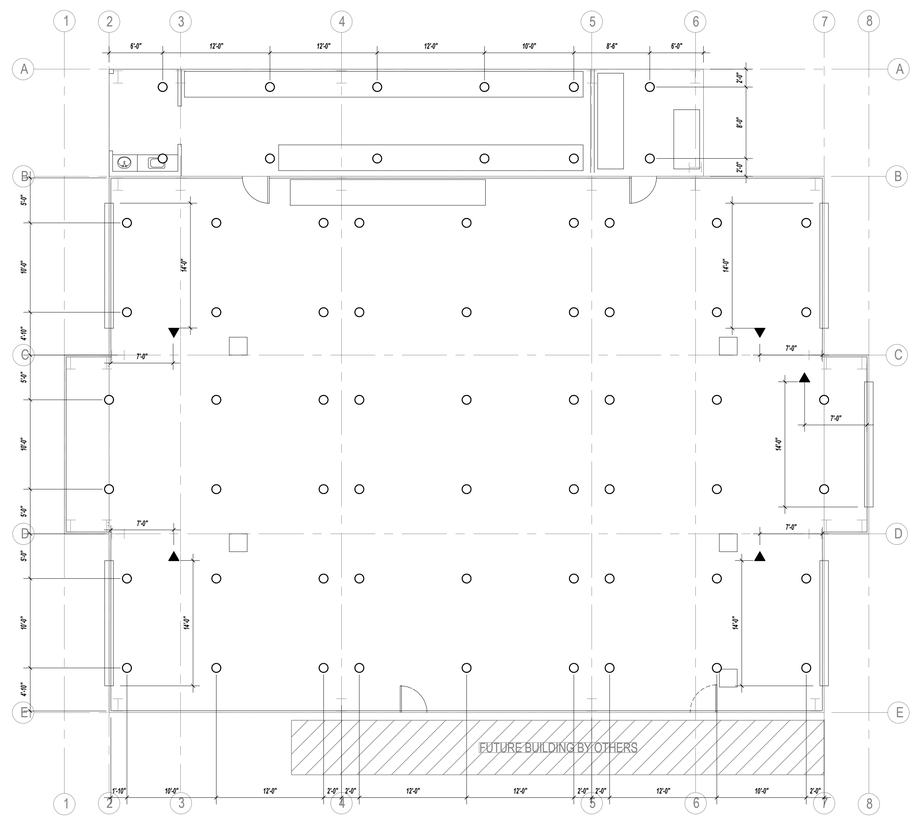

1 **FIRE SPRINKLER CEILING PLAN**
SCALE: 1/8" = 1'-0"

FIRE SPRINKLER LEGEND

	FIRE SPRINKLER RISER
	NEW SPRINKLER PENDENT
	NEW SPRINKLER UPRIGHT
	PIPE HANGER
	PIPE RESTRAINT
FW	UNDERGROUND FIRE WATER
	FLOW HYRANT
BFP	BACKFLOW PREVENTER
	LATERAL SEISMIC BRACING
	LONGITUDINAL SEISMIC BRACING
	4-WAY SEISMIC BRACING

FIRE SPRINKLER INFORMATION

SYM.	MODEL	SIN	NPT	K	TEMP	DESCRIPTION	QTY.
○	FL-QR	V2704	1/2	5.6	165°	SPRINKLER UPRIGHT	66
△	FL-QR/SW	V2710	1/2	5.6	175°	SPRINKLER SIDEWALL FOR SECTIONAL DOORS	5

REV.	DESCRIPTION	CK'D	APP	DATE

PUBLIC WORKS DEPARTMENT ENGINEERING DIVISION
CITY OF SAN BUENAVENTURA

FIRE STATION NO. 7
FIRE SPRINKLER PLAN

DRN. BY: C&A DES. BY: C&A CK'D. BY:

PRINCIPAL ENGINEER 5 May 2026 DATE

CITY ENGINEER 5/7/2026 DATE

SPEC. NUMBER 2025-010 PROJECT NUMBER FA11-1061

9-24-25 SHEET 72 OF 151 DWG. NO. 2025-D-010

LICENSED PROFESSIONAL ENGINEER D. TED EDELMANN FP 1847 EXPIRES 6/30/2026 FIRE PROTECTION STATE OF CALIFORNIA

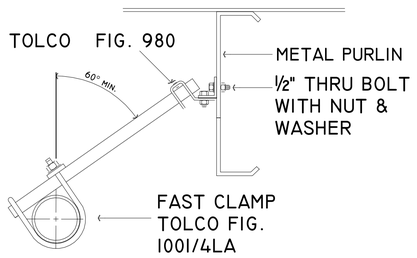

PLAN SYM.

NOT TO SCALE

5 SBI LATERAL BRACE

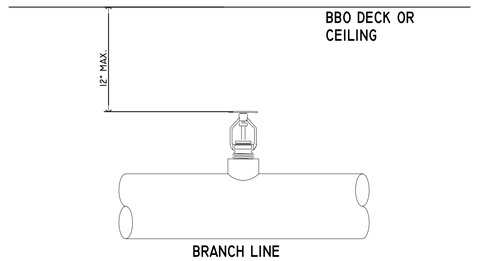

PLAN SYM.

NOT TO SCALE

2 TYPICAL SPRINKLER UPRIGHT

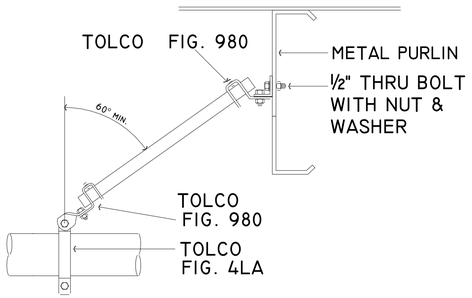

PLAN SYM.

NOT TO SCALE

6 SB2 LONGITUDINAL BRACE

1. (2) #16 X 2" DRIVE SCREWS - UP TO 2" PIPE
2. ROD IS EXTENDED TO RESTRAIN PIPE FROM VERTICAL MOVEMENT
3. TOLCO FIG. 58 SWIVEL ATTACHMENT

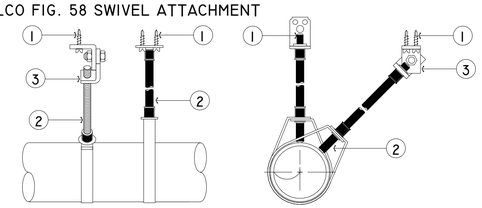

NOTE:

1. RESTRAINT OF BRANCH LINES SHALL NOT APPLY TO PIPES INDIVIDUALLY SUPPORTED BY RODS LESS THAN 6 IN. LONG MEASURED BETWEEN THE TOP OF THE PIPE AND THE POINT OF ATTACHMENT TO THE BUILDING STRUCTURE. (SEC. 9.3.6.5)
2. BRACING INTERVALS NOT TO EXCEED 41-FT PER TABLE 9.3.6.4(A)
3. END LINE BRACING SHALL BE LOCATED WITHIN 2'-0 OF A HANGER THAT RESTRAINT THE PIPE FROM UPWARD MOVEMENT.

PLAN SYM.

NOT TO SCALE

3 BRANCH LINE RESTRAINT

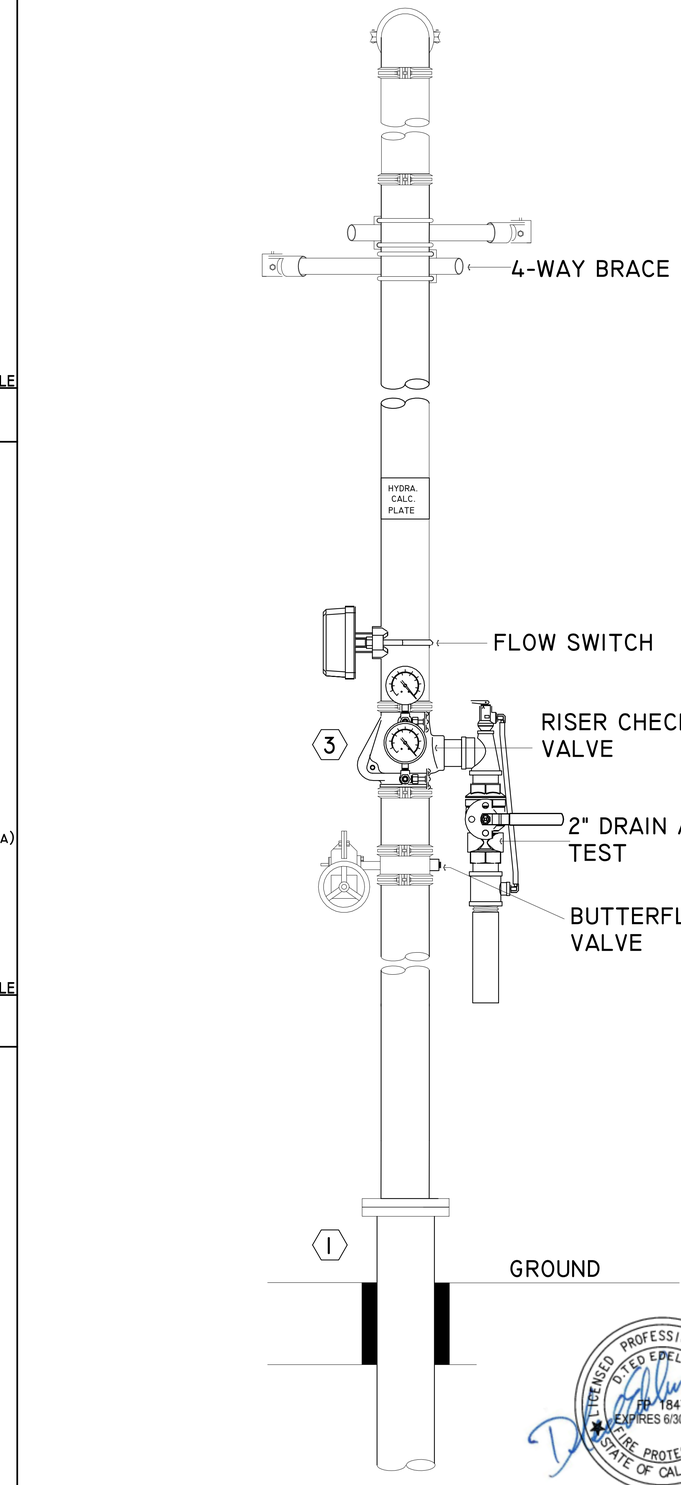

1 NEW FIRE SPRINKLER RISER

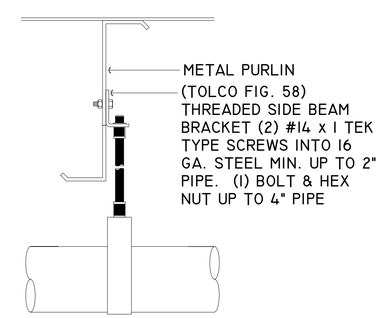

TOLCO FIG.58

PLAN SYM.

NOT TO SCALE

4 SIDE BRACKET HANGER

REV.	DESCRIPTION	CK'D	APP	DATE

PUBLIC WORKS DEPARTMENT ENGINEERING DIVISION

CITY OF SAN BUENAVENTURA

FIRE STATION NO. 7 DETAILS

DRN. BY: C&A | DES. BY: C&A | CK'D. BY:

PRINCIPAL ENGINEER — DATE: 5 May 2026

CITY ENGINEER — DATE: 5/7/2026

SPEC. NUMBER 2025-010 | PROJECT NUMBER FA11-1061

9-24-25 | SHEET 73 OF 151 | DWG. NO. 2025-D-010

TOLBrace™ Seismic Calculation

Fire Station 7 Job #

2269 Alessandro

Brace Identification	SB2 - LONGITUDINAL
Brace Type (Per NFPA#13)	NFPA Type D
Braced Pipe (ft)	4" Sch.10 Steel Pipe
Spacing of Brace	63' 0" (19.2 m)
Orientation of Brace	Longitudinal
Bracing Material	1" Sch.40
Maximum Brace Length	7' 0" (2.13 m)
Slenderness Ratio used for Load Calculation	200
True Angle of Brace for Calculation	30°
Type of Fastener	Fig.825 Along Beam
Length of Fastener	N/A

Summary of Pipe within Zone of Influence

4" Sch.10 Steel Pipe (101.6 mm)	63 ft (19.2 m)

G-Factor Used 0.93	
Allowance for Heads and Fittings	15%
Conclusions	
Total Adjusted Load of Pipe in Zone of Influence	794 lbs (360 kg)
Material Capacity	926 lbs (420 kg)
Fastener Capacity	800 lbs (363 kg)
Fig. 4L Clamp	1000 lbs (454 kg)
Fig.980 - 3/8" Universal Swivel	800 lbs (363 kg)
Structural Member	STEEL BEAM

Calculations prepared by C&A

* The description of the Structural Member is for informational purposes only.
TOLBrace™ software calculates the brace assembly only, not the structure it is attached to.
Calculated with TOLBrace™ 8
Visit us at www.tolco.com

TOLBrace™ Seismic Bracing Calculations

V8.8.144

Project Address: Fire Station 7
2269 Alessandro
Ventura CA
Job #

Contractor:
Address:
Phone:
License:

Calculations based on 2022 NFPA Pamphlet #13

Brace Information

Maximum Brace Length	7' 0" (2.134 m)
Diameter of Brace	1"
Type of Brace	Sch.40
Angle of Brace	30° Min.
Least Rad. of Gyration	0.42" (11 mm)
L/R Value	200
Max Horizontal Load	926 lbs (420 kg)

TOLCO™ Brace Components

TOLCO™ Component	Listed Load	Adjusted Load
Fig. 4L Clamp	2000 lbs (907 kg)	1000 lbs (454 kg)
Fig.980 - 3/8" Universal Swivel	1600 lbs (726 kg)	800 lbs (363 kg)
Fig.825 Along	1600 lbs (726 kg)	800 lbs (362 kg)

*Calculation Based on CONCENTRIC Loading
*Please Note: These calculations are for TOLCO™ components only. Use of any other components voids these calculations and the listing of the assembly.

Fastener Information

Orientation to Connecting Surface	NFPA Type D
Fastener	
Type	Fig.825 Along
Diameter	N/A
Length	N/A
Maximum Load	1600 lbs (726 kg)
Prying Factor	N/A

Seismic Brace Assembly Detail

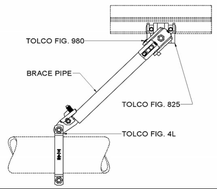

Brace Identification on Plans SB2 - LONGITUDINAL
Brace Type Lateral [ ] Longitudinal [X] 4-Way [ ]

Sprinkler System Load Calculation (Fpw = CpWp)
Cp = 0.93

Diameter	Type	Length	Total Length	Weight Per Unit Length	Total Weight
4" (100 mm)	Sch. 10	63 ft (19.2 m)	63 ft (19.2 m)	11.78 lb/ft (17.53 kg/m)	742 lbs (337 kg)

Subtotal Weight	742 lbs (337 kg)
Wp (incl. 15%)	853 lbs (387 kg)
Total (Fpw)	794 lbs (360 kg)
Maximum Fpw per 18.5.5.2 (if applicable)	N/A

Main Size	Type/Sch.	Spacing (ft)
4"	Sch. 10	63

(TOLBrace™ Version 8) **Use of TOLBrace™ is subject to terms and conditions per the end user license agreement**

TOLBrace™ Seismic Calculation

Fire Station 7 Job #

2269 Alessandro

Brace Identification	SB1 - LATERAL
Brace Type (Per NFPA#13)	NFPA Type D
Braced Pipe (ft)	4" Sch.10 Steel Pipe
Spacing of Brace	21' 0" (6.4 m)
Orientation of Brace	Lateral
Bracing Material	1" Sch.40
Maximum Brace Length	7' 0" (2.13 m)
Slenderness Ratio used for Load Calculation	200
True Angle of Brace for Calculation	30°
Type of Fastener	Fig.825 Across Beam
Length of Fastener	N/A

Summary of Pipe within Zone of Influence

4" Sch.10 Steel Pipe (101.6 mm)	21 ft (6.4 m)

G-Factor Used 0.93	
Allowance for Heads and Fittings	15%
Conclusions	
Total Adjusted Load of Pipe in Zone of Influence	265 lbs (120 kg)
Material Capacity	926 lbs (420 kg)
Fastener Capacity	800 lbs (363 kg)
Fig. 1001 Clamp	1000 lbs (454 kg)
Fig.980 - 3/8" Universal Swivel	800 lbs (363 kg)
Structural Member	STEEL BEAMS

Calculations prepared by C&A

* The description of the Structural Member is for informational purposes only.
TOLBrace™ software calculates the brace assembly only, not the structure it is attached to.
Calculated with TOLBrace™ 8
Visit us at www.tolco.com

TOLBrace™ Seismic Bracing Calculations

V8.8.144

Project Address: Fire Station 7
2269 Alessandro
Ventura CA
Job #

Contractor:
Address:
Phone:
License:

Calculations based on 2022 NFPA Pamphlet #13

Brace Information

Maximum Brace Length	7' 0" (2.134 m)
Diameter of Brace	1"
Type of Brace	Sch.40
Angle of Brace	30° Min.
Least Rad. of Gyration	0.42" (11 mm)
L/R Value	200
Max Horizontal Load	926 lbs (420 kg)

TOLCO™ Brace Components

TOLCO™ Component	Listed Load	Adjusted Load
Fig. 1001 Clamp	2000 lbs (907 kg)	1000 lbs (454 kg)
Fig.980 - 3/8" Universal Swivel	1600 lbs (726 kg)	800 lbs (363 kg)
Fig.825 Across	1600 lbs (726 kg)	800 lbs (362 kg)

*Calculation Based on CONCENTRIC Loading
*Please Note: These calculations are for TOLCO™ components only. Use of any other components voids these calculations and the listing of the assembly.

Fastener Information

Orientation to Connecting Surface	NFPA Type D
Fastener	
Type	Fig.825 Across
Diameter	N/A
Length	N/A
Maximum Load	1600 lbs (726 kg)
Prying Factor	N/A

Seismic Brace Assembly Detail

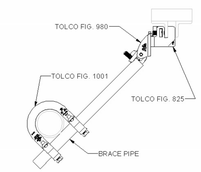

Brace Identification on Plans SB1 - LATERAL
Brace Type Lateral [X] Longitudinal [ ] 4-Way [ ]

Sprinkler System Load Calculation (Fpw = CpWp)
Cp = 0.93

Diameter	Type	Length	Total Length	Weight Per Unit Length	Total Weight
4" (100 mm)	Sch. 10	21 ft (6.4 m)	21 ft (6.4 m)	11.78 lb/ft (17.53 kg/m)	247 lbs (112 kg)

Subtotal Weight	247 lbs (112 kg)
Wp (incl. 15%)	284 lbs (129 kg)
Total (Fpw)	264 lbs (120 kg)
Maximum Fpw per 18.5.5.2 (if applicable)	Contact Pipe Manufacturer

Main Size	Type/Sch.	Spacing (ft)
4"	Sch. 10	21

(TOLBrace™ Version 8) **Use of TOLBrace™ is subject to terms and conditions per the end user license agreement**

3/10/25, 2:26 PM U.S. Seismic Design Maps

USGS web services were down for some period of time and as a result this tool wasn't operational, resulting in *timeout* error.
USGS web services are now operational so this tool should work as expected.

OSHPD

2269 Alessandro Dr, Ventura, CA 93001, USA

Latitude, Longitude: 34.2669561, -119.2692702

Date	3/10/2025, 2:25:52 PM
Design Code Reference Document	ASCE7-16
Risk Category	II
Site Class	D - Default (See Section 11.4.3)

Type	Value	Description
S_S	1.956	MCE_R ground motion. (for 0.2 second period)
S_1	0.735	MCE_R ground motion. (for 1.0s period)
S_{MS}	2.347	Site-modified spectral acceleration value
S_{M1}	null -See Section 11.4.8	Site-modified spectral acceleration value
S_{DS}	1.565	Numeric seismic design value at 0.2 second SA
S_{D1}	null -See Section 11.4.8	Numeric seismic design value at 1.0 second SA

Type	Value	Description
SDC	null -See Section 11.4.8	Seismic design category
F_a	1.2	Site amplification factor at 0.2 second
F_v	null -See Section 11.4.8	Site amplification factor at 1.0 second
PGA	0.859	MCE_G peak ground acceleration
F_{PGA}	1.2	Site amplification factor at PGA
PGA_M	1.031	Site modified peak ground acceleration
T_L	8	Long-period transition period in seconds
SsRT	1.956	Probabilistic risk-targeted ground motion. (0.2 second)
SsUH	2.215	Factored uniform-hazard (2% probability of exceedance in 50 years) spectral acceleration
SsD	2.457	Factored deterministic acceleration value. (0.2 second)
S1RT	0.735	Probabilistic risk-targeted ground motion. (1.0 second)
S1UH	0.832	Factored uniform-hazard (2% probability of exceedance in 50 years) spectral acceleration.
S1D	0.765	Factored deterministic acceleration value. (1.0 second)
PGAd	0.984	Factored deterministic acceleration value. (Peak Ground Acceleration)

LICENSED PROFESSIONAL ENGINEER
OTTO EDELMANN
FP 1847
EXPIRES 6/30/2026
FIRE PROTECTION
STATE OF CALIFORNIA

REV.	DESCRIPTION	CK'D	APP	DATE

PUBLIC WORKS DEPARTMENT ENGINEERING DIVISION
CITY OF SAN BUENAVENTURA

FIRE STATION NO. 7
SEISMIC BRACING

DRN. BY: C&A DES. BY: C&A CK'D. BY:

PRINCIPAL ENGINEER — DATE: 5 May 2026

CITY ENGINEER — DATE: 5/7/2026

SPEC. NUMBER 2025-010 PROJECT NUMBER FA11-1061

9-24-25 SHEET 74OF 151 DWG. NO. 2025-D-010

CAL GREEN CODE NONRESIDENTIAL MANDATORY MEASURES

DIVISION 5.4-MATERIAL CONSERVATION AND RESOURCE EFFICIENCY

5.410.4 TESTING AND ADJUSTING. TESTING AND ADJUSTING OF SYSTEMS SHALL BE REQUIRED FOR NEW BUILDINGS LESS THAN 10,000 SQUARE FEET OR NEW SYSTEMS TO SERVE AN ADDITION OR ALTERATION SUBJECT TO 2022 CGBSC 303.1.
5.410.4.2 SYSTEMS. DEVELOP A WRITTEN PLAN OF PROCEDURES FOR TESTING AND ADJUSTING SYSTEMS. SYSTEMS TO BE INCLUDED FOR TESTING AND ADJUSTING SHALL INCLUDE AT A MINIMUM, AS APPLICABLE TO THE PROJECT:
1. HVAC SYSTEMS AND CONTROLS
2. WATER HEATING SYSTEMS
3. WATER REUSE SYSTEMS
5.410.4.3 PROCEDURES. PERFORM TESTING AND ADJUSTING PROCEDURES IN ACCORDANCE WITH MANUFACTURER'S SPECIFICATIONS AND APPLICABLE STANDARDS ON EACH SYSTEM.

AT A MINIMUM THE MECHANICAL CONTRACTOR SHALL OBTAIN THE LATEST START-UP CHECK LIST(S) FROM THE EQUIPMENT MANUFACTURER AND PERFORM ALL TESTS AND CHECKS APPLICABLE. AFTER COMPLETION OF THE START-UP CHECK LIST THE MECHANICAL CONTRACTOR SHALL MAKE ADJUSTMENTS TO PUT THE EQUIPMENT IN PEAK WORKING ORDER. MECHANICAL CONTRACTOR SHALL DOCUMENT ALL WORK PERFORMED. CLOSE OUT DOCUMENTATION PROVIDED TO THE GENERAL CONTRACTOR SHALL INCLUDE ALL COMPLETED CHECK LIST(S) AND DOCUMENTATION FOR ANY WORK PERFORMED. THE GENERAL CONTRACTOR SHALL SUBMIT THE CHECK LIST(S) AND WORK DOCUMENTATION TO ENGINEER OF RECORD.

5.410.4.3.1 HVAC BALANCING. IN ADDITION TO TESTING AND ADJUSTING, BEFORE A NEW SPACE-CONDITIONING SYSTEM SERVING A BUILDING OR SPACE IS OPERATED FOR NORMAL USE, THE SYSTEM SHALL BE BALANCED IN ACCORDANCE WITH THE PROCEDURES DEFINED BY THE TESTING ADJUSTING AND BALANCING BUREAU NATIONAL STANDARDS; THE NATIONAL ENVIRONMENTAL BALANCING BUREAU PROCEDURAL STANDARDS; ASSOCIATED AIR BALANCE COUNCIL NATIONAL STANDARDS OR AS APPROVED BY THE BUILDING ENFORCING AGENCY.

TESTING AND AIR BALANCING SHALL BE PERFORMED BY AN INDEPENDENT BALANCING COMPANY CERTIFIED BY ASSOCIATED AIR BALANCE COUNCIL (AABC), NATIONAL ENVIRONMENTAL BALANCING BUREAU (NEBB) OR TESTING, ADJUSTING, AND BALANCING BUREAU (TABB). TESTING AND BALANCING SHALL BE PERFORMED BY A COMPANY OTHER THAN THE MECHANICAL SYSTEM INSTALLERS/CONTRACTOR. THE NAME OF THE FIRM THAT THE CONTRACTOR PROPOSES TO ENGAGE TO PERFORM THIS WORK OF BALANCING THE SYSTEM SHALL BE SUBMITTED TO THE ENGINEER FOR APPROVAL PRIOR TO COMMENCING THE WORK.

AFTER SYSTEMS HAVE BEEN TESTED AS OUTLINED, AIR AND WATER FLOW RATES SHALL BE BALANCED, AND CONTROL DEVICES ADJUSTED. BALANCE AND TESTING SHALL NOT BEGIN UNTIL SYSTEMS HAVE BEEN COMPLETED AND ARE IN FULL WORKING ORDER. UPON COMPLETION OF THE BALANCING OPERATION AND PRIOR TO FINAL ACCEPTANCE OF THE SYSTEMS, THE BALANCING FIRM SHALL SUBMIT A REPORT, WITH SIX (6) COPIES, CERTIFYING TO THE PROPER PERFORMANCE OF THE SYSTEM FOR APPROVAL BY THE MECHANICAL ENGINEER.

5.410.4.4 REPORTING. AFTER COMPLETION OF TESTING, ADJUSTING AND BALANCING, PROVIDE A FINAL REPORT OF TESTING SIGNED BY THE INDIVIDUAL RESPONSIBLE FOR PERFORMING THESE SERVICES.

5.410.4.5 OPERATION AND MAINTENANCE (O&M) MANUAL. PROVIDE THE BUILDING OWNER OR REPRESENTATIVE WITH DETAILED OPERATING AND MAINTENANCE INSTRUCTIONS AND COPIES OF GUARANTIES/WARRANTIES FOR EACH SYSTEM. O&M INSTRUCTIONS SHALL BE CONSISTENT WITH OSHA REQUIREMENTS IN CCR, TITLE 8, SECTION 5142, AND OTHER RELATED REGULATIONS.

5.410.4.5.1 INSPECTIONS AND REPORTS. INCLUDE A COPY OF ALL INSPECTION VERIFICATIONS AND REPORTS REQUIRED BY THE ENFORCING AGENCY.

DIVISION 5.5-ENVIRONMENTAL QUALITY

SECTION 5.504 POLLUTANT CONTROL

5.504.1 TEMPORARY VENTILATION. THE PERMANENT HVAC SYSTEM SHALL ONLY BE USED DURING CONSTRUCTION IF NECESSARY TO CONDITION THE BUILDING WITHIN THE REQUIRED TEMPERATURE RANGE FOR MATERIAL AND EQUIPMENT INSTALLATION. IF THE HVAC SYSTEM IS USED DURING CONSTRUCTION, USE RETURN AIR FILTERS WITH A MINIMUM EFFICIENCY REPORTING VALUE (MERV) OF 8, BASED ON ASHRAE 52.2-1999, OR AN AVERAGE EFFICIENCY OF 30% BASED ON ASHRAE 52.1-1992. REPLACE ALL FILTERS IMMEDIATELY PRIOR TO OCCUPANCY, OR, IF THE BUILDING IS OCCUPIED DURING ALTERATION, AT THE CONCLUSION OF CONSTRUCTION.

5.504.3 COVERING OF DUCT OPENINGS AND PROTECTION OF MECHANICAL EQUIPMENT DURING CONSTRUCTION. AT THE TIME OF ROUGH INSTALLATION AND DURING STORAGE ON THE CONSTRUCTION SITE UNTIL FINAL STARTUP OF THE HEATING, COOLING AND VENTILATING EQUIPMENT, ALL DUCT AND OTHER RELATED AIR DISTRIBUTION COMPONENT OPENINGS SHALL BE COVERED WITH TAPE, PLASTIC, SHEET METAL OR OTHER METHODS ACCEPTABLE TO THE ENFORCING AGENCY TO REDUCE THE AMOUNT OF DUST, WATER AND DEBRIS WHICH MAY ENTER THE SYSTEM.

5.504.4.1 ADHESIVES, SEALANTS AND CAULKS. ADHESIVES, SEALANTS, AND CAULKS USED ON THE PROJECT SHALL MEET THE REQUIREMENTS OF THE FOLLOWING STANDARDS:
1. ADHESIVES, ADHESIVE BONDING PRIMERS, ADHESIVE PRIMERS, SEALANTS, SEALANT PRIMERS AND CAULKS SHALL COMPLY WITH LOCAL OR REGIONAL AIR POLLUTION CONTROL OR AIR QUALITY MANAGEMENT DISTRICT RULES WHERE APPLICABLE, OR SCAQMD RULE 1168 VOC LIMITS, AS SHOWN IN TABLES 5.504.4.1 AND 5.504.4.2. SUCH PRODUCTS ALSO SHALL COMPLY WITH THE RULE 1168 PROHIBITION ON THE USE OF CERTAIN TOXIC COMPOUNDS (CHLOROFORM, ETHYLENE DICHLORIDE, METHYLENE CHLORIDE, PERCHLOROETHYLENE AND TRICHLOROETHYLENE), EXCEPT FOR AEROSOL PRODUCTS AS SPECIFIED IN SUBSECTION 2, BELOW.
2. AEROSOL ADHESIVES, AND SMALLER UNIT SIZES OF ADHESIVES, AND SEALANT OR CAULKING COMPOUNDS (IN UNITS OF PRODUCT, LESS PACKAGING, WHICH DO NOT WEIGH MORE THAN ONE POUND AND DO NOT CONSIST OF MORE THAN 16 FLUID OUNCES) SHALL COMPLY WITH STATEWIDE VOC STANDARDS AND OTHER REQUIREMENTS, INCLUDING PROHIBITIONS ON USE OF CERTAIN TOXIC COMPOUNDS, OF CALIFORNIA CODE OF REGULATIONS, TITLE 17, COMMENCING WITH SECTION 94507.

TABLE 5.504.4.1 ADHESIVE VOC LIMIT
LESS WATER AND LESS EXEMPT COMPOUNDS IN GRAMS PER LITER

SPECIALTY APPLICATIONS	CURRENT VOC LIMIT
PVC WELDING	510
CPVC WELDING	490
ABS WELDING	325
SPECIAL PURPOSE CONTACT ADHESIVE	250

1. IF AN ADHESIVE IS USED TO BOND DISSIMILAR SUBSTRATES TOGETHER THE ADHESIVE WITH THE HIGHEST VOC CONTENT SHALL BE ALLOWED.
2. FOR ADDITIONAL INFORMATION REGARDING METHODS TO MEASURE THE VOC CONTENT SPECIFIED IN THIS TABLE, SEE SOUTH COAST AIR QUALITY MANAGEMENT DISTRICT RULE 1168, HTTP://WWW.ARB.CA.GOV/DRDB/SC/CURHTML/R1168.PDF.

5.504.5.3 FILTERS. IN MECHANICALLY VENTILATED BUILDINGS, PROVIDE REGULARLY OCCUPIED AREAS OF THE BUILDING WITH AIR FILTRATION MEDIA FOR OUTSIDE AND RETURN AIR THAT PROVIDES AT LEAST A MINIMUM EFFICIENCY REPORTING VALUE (MERV) OF 13. MERV 13 FILTERS SHALL BE INSTALLED PRIOR TO OCCUPANCY, AND RECOMMENDATIONS FOR MAINTENANCE WITH FILTERS OF THE SAME VALUE SHALL BE INCLUDED IN THE OPERATION AND MAINTENANCE MANUAL. FILTERS SHALL BE CLEARLY LABELED BY THE MANUFACTURER INDICATING THE MERV RATING.

EXCEPTIONS:
1. EXISTING MECHANICAL EQUIPMENT.

SECTION 5.505 INDOOR MOISTURE CONTROL

5.505.1 INDOOR MOISTURE CONTROL. BUILDINGS SHALL MEET OR EXCEED THE PROVISIONS OF CALIFORNIA BUILDING CODE, CCR, TITLE 24, PART 2, SECTIONS 1202 (VENTILATION) AND CHAPTER 14 (EXTERIOR WALLS). FOR ADDITIONAL MEASURES NOT APPLICABLE TO LOW-RISE RESIDENTIAL OCCUPANCIES, SEE SECTION 5.407.2 OF THIS CODE.

SECTION 5.506 INDOOR AIR QUALITY

5.506.1 OUTSIDE AIR DELIVERY. FOR MECHANICALLY OR NATURALLY VENTILATED SPACES IN BUILDINGS, MEET THE MINIMUM REQUIREMENTS OF SECTION 120.1 (REQUIREMENTS FOR VENTILATION) OF THE 2022 CALIFORNIA ENERGY CODE, OR THE APPLICABLE LOCAL CODE, WHICHEVER IS MORE STRINGENT, AND DIVISION 1, CHAPTER 4 OF CCR, TITLE 8.

5.506.2 CARBON DIOXIDE (CO2) MONITORING. FOR BUILDINGS OR ADDITIONS EQUIPPED WITH DEMAND CONTROL VENTILATION, CO2 SENSORS AND VENTILATION CONTROLS SHALL BE SPECIFIED AND INSTALLED IN ACCORDANCE WITH THE REQUIREMENTS OF THE 2022 CALIFORNIA ENERGY CODE, SECTION 120.1(C)(4).

SECTION 5.508 OUTDOOR AIR QUALITY

5.508.1 OZONE DEPLETION AND GREENHOUSE GAS REDUCTIONS. INSTALLATIONS OF HVAC, REFRIGERATION AND FIRE SUPPRESSION EQUIPMENT SHALL COMPLY WITH SECTIONS 5.508.1.1 AND 5.508.1.2.

5.508.1.1 CHLOROFLUOROCARBONS (CFCS). INSTALL HVAC, REFRIGERATION AND FIRE SUPPRESSION EQUIPMENT THAT DO NOT CONTAIN CFCS.

5.508.1.2 HALONS. INSTALL HVAC, REFRIGERATION AND FIRE SUPPRESSION EQUIPMENT THAT DO NOT CONTAIN HALONS.

SECTION 702.1 INSTALLER TRAINING

HVAC SYSTEM INSTALLERS SHALL BE TRAINED AND CERTIFIED IN THE PROPER INSTALLATION OF HVAC SYSTEMS INCLUDING DUCTS AND EQUIPMENT BY A NATIONALLY OR REGIONALLY RECOGNIZED TRAINING OR CERTIFICATION PROGRAM. UNCERTIFIED PERSONS MAY PERFORM HVAC INSTALLATIONS WHEN UNDER THE DIRECT SUPERVISION AND RESPONSIBILITY OF A PERSON TRAINED AND CERTIFIED TO INSTALL HVAC SYSTEMS OR CONTRACTOR LICENSED TO INSTALL HVAC SYSTEMS. EXAMPLES OF ACCEPTABLE HVAC TRAINING AND CERTIFICATION PROGRAMS INCLUDE BUT ARE NOT
LIMITED TO THE FOLLOWING:
1. STATE CERTIFIED APPRENTICESHIP PROGRAMS.
2. PUBLIC UTILITY TRAINING PROGRAMS.
3. TRAINING PROGRAMS SPONSORED BY TRADE, LABOR OR STATE-WIDE ENERGY CONSULTING OR VERIFICATION ORGANIZATIONS.
4. PROGRAMS SPONSORED BY MANUFACTURING ORGANIZATIONS.
5. OTHER PROGRAMS ACCEPTABLE TO THE ENFORCING AGENCY

MECHANICAL GENERAL NOTES

1 COMPLY WITH THE REQUIREMENTS OF THE FOLLOWING CODES:

2022 CALIFORNIA ADMINISTRATIVE CODE (CAC): PART 1, TITLE 24, CALIFORNIA CODE OF REGULATIONS (CCR)
2022 CALIFORNIA BUILDING CODE (CBC): PART 2, TITLE 24 CCR
2022 CALIFORNIA ELECTRICAL CODE (CEC): PART 3, TITLE 24 CCR
2022 CALIFORNIA MECHANICAL CODE (CMC): PART 4, TITLE 24 CCR
2022 CALIFORNIA PLUMBING CODE (CPC): PART 5, TITLE 24 CCR
2022 CALIFORNIA ENERGY CODE (CENC): PART 6, TITLE 24 CCR
2022 CALIFORNIA FIRE CODE (CFC): PART 9, TITLE 24 CCR
2022 CALIFORNIA GREEN BUILDING STANDARDS CODE (CAL GREEN): PART 11, TITLE 24 CCR

REPORT DEFICIENCIES WITHIN THIRTY (30) DAYS UPON AUTHORIZATION TO PROCEED.

2 THESE DRAWINGS ARE A GENERAL GRAPHIC PRESENTATION OF THE WORK. DUCTWORK, PIPING, AND EQUIPMENT, AS SHOWN, ARE SCHEMATIC. FABRICATE AND INSTALL BASED ON ACTUAL FIELD MEASUREMENT. COORDINATE WITH OTHER TRADES. ADHERE TO LOCATIONS AS CLOSELY AS POSSIBLE, VARY RUNS OR SHAPE OF DUCTWORK AS REQUIRED TO MEET STRUCTURAL AND OTHER INTERFERENCES AS REQUIRED BY THE ARCHITECT. PROVIDE A COMPLETE SET OF SHOP DRAWINGS REFLECTING ACTUAL DIMENSIONS, ACCESS REQUIREMENTS, AND DETAILS BASED UPON THE ACTUAL EQUIPMENT PROCURED. MAINTAIN AN UP TO DATE SET OF AS-BUILT DRAWINGS AT THE JOB SITE.

3 THE MECHANICAL CONTRACTOR SHALL COORDINATE ALL ITEMS RELATED TO MECHANICAL SYSTEMS WITH THE WORK OF OTHER TRADES BEFORE PROCEEDING WITH PROCURING OR FABRICATION OF EQUIPMENT, DUCTWORK, PIPING ETC. ITEMS TO BE COORDINATED SHALL INCLUDE BUT ARE NOT LIMITED TO THE FOLLOWING:

GRILLES, REGISTERS AND DIFFUSERS SHALL BE COORDINATED WITH THE REFLECTED CEILING PLAN.

DUCTWORK LOCATIONS AND POTENTIAL INTERFERENCES WITH STRUCTURAL MEMBERS, FRAMING, FIRE SPRINKLER LINES, PLUMBING WASTE LINES, CABLE TRAYS AND CONDUIT.

OPENINGS REQUIRED IN WALLS, FLOORS OR CEILINGS SHALL BE COORDINATED WITH THE GENERAL CONTRACTOR AND/OR FRAMING CONTRACTOR PRIOR TO THE START OF CONSTRUCTION TO AVOID REWORK. ANY REWORK REQUIRED SHALL BE AT NO ADDITIONAL COST TO THE OWNER.

PRIOR TO BIDDING THE PROJECT THE MECHANICAL CONTRACTOR SHALL COORDINATE WITH THE ELECTRICAL CONTRACTOR TO DETERMINE WHO WILL BE RESPONSIBLE FOR PROCURING AND INSTALLING MOTOR STARTERS, CONDUIT FOR LOW VOLTAGE CONTROLS AND LINE VOLTAGE CONTROL DEVICES, SUCH AS SINGLE POLE SWITCHES.

ACCESS TO VOLUME DAMPERS FOR BALANCING. ACCESS TO ALL EQUIPMENT, AS WELL AS PLATFORM AND CURB LOCATIONS.

CONSTRUCTION OF PLATFORMS AND SHAPED RUNNERS OR OTHER MEANS TO MOUNT CURBS LEVEL. ALL PLATFORMS AND CURBS SHALL BE LEVEL UNLESS OTHERWISE NOTED OR DETAILED ON THE MECHANICAL PLANS.

4 REVIEW ALL DRAWINGS AND SPECIFICATIONS INCLUDING ARCHITECTURAL, STRUCTURAL, CIVIL, MECHANICAL, PLUMBING, AND ELECTRICAL. ANY QUESTIONS SHALL BE BROUGHT UP, IN WRITING, TO THE ATTENTION OF THE ENGINEER BEFORE THE START OF CONSTRUCTION.

5 ALL EQUIPMENT SHALL BE INSTALLED WITH SUFFICIENT ACCESS TO CONTROLS, FILTERS, ELECTRIC MOTORS, ETC. ACCESS CLEARANCE SHALL BE 30" OR AS REQUIRED BY THE EQUIPMENT MANUFACTURER, WHICH EVER IS GREATER. CONTRACTORS SHALL PROVIDE ACCESS PANELS WHERE REQUIRED. WHERE VERTICAL SPACE ALLOWS, INSTALL DUCTWORK THAT IS IN CLOSE PROXIMITY TO MECHANICAL, ELECTRICAL OR ANY OTHER ITEM THAT REQUIRES ACCESS HIGH IN THE SPACE FOR EASE OF ACCESS.

6 PRIOR TO ROUGH-IN, COORDINATE THE ORIENTATION OF ELECTRICAL BOXES WITH THE DIMENSIONS OF THE DEVICE OR WALL PLATE THAT WILL BE INSTALLED IN OR ON THE ELECTRICAL BOX TO ENSURE THAT THE DEVICE IS CORRECTLY ORIENTED AND THE BOX IS PROPERLY ALIGNED TO BE COVERED BY THE DEVICE OR WALL PLATE.

7 HANDLE, STORE AND INSTALL EQUIPMENT PER MANUFACTURER'S INSTRUCTIONS.

8 BRACE AND SUPPORT PIPES, CONDUIT, AND DUCTWORK IN ACCORDANCE TO SMACNA GUIDELINES FOR SEISMIC RESTRAINTS OF MECHANICAL AND PLUMBING PIPING SYSTEM.

9 REFER TO ARCHITECTURAL REFLECTED CEILING PLAN FOR EXACT LOCATION OF DIFFUSERS, REGISTERS, GRILLES, AND ACCESS PANELS.

10 ALL DUCT DIMENSIONS, AS SHOWN ON MECHANICAL DRAWINGS ARE CLEAR INSIDE DIMENSIONS. INCREASE OUTER DUCT DIMENSION AS REQUIRED TO ACCOUNT FOR THE THICKNESS OF INTERNAL LINING WHERE APPLICABLE.

11 INSULATION AND FLEXIBLE DUCT SHALL COMPLY WITH STATE FIRE MARSHALL CRITERIA AND SHALL NOT EXCEED FLAME SPREAD OF 25 AND SMOKE DEVELOPED OF 50 PER ASTM-84, NFPA-223, AND UL 723.

12 INSULATE PIPING AND DUCTWORK IN ACCORDANCE TO THE GOVERNING CODES.

13 COMMISSION AND START-UP THE MECHANICAL SYSTEMS TO ASSURE A COMPLETE AND OPERATIONAL HVAC SYSTEM IN ACCORDANCE WITH ASHRAE AND NEBB.

14 ALL SQUARE ELBOWS IN SUPPLY DUCTWORK SHALL HAVE TURNING VANES. PROVIDE MANUAL VOLUME DAMPER AT EACH BRANCH DUCT TAKE-OFF SERVING EACH AIR TERMINAL DEVICE. PROVIDE BALANCING DAMPERS FOR EACH MAIN DUCT TAKE-OFF IN ACCORDANCE TO SMACNA IN ORDER TO ASSURE A COMPLETELY BALANCED SYSTEM.

15 CONTROLS AND SWITCHES INTENDED TO BE USED BY THE OCCUPANT OF A ROOM OR AREA TO CONTROL COOLING, HEATING AND VENTILATING EQUIPMENT SHALL BE MOUNTED AT THE HEIGHTS GIVEN BY SECTION 11B-308.1 OF THE 2022 CBC. NOTIFY THE ARCHITECT IMMEDIATELY IF THE MOUNTING HEIGHTS REQUIRED BY THE 2022 CBC CANNOT BE OBTAINED AT THE LOCATION WHERE THE CONTROL DEVICE IS SHOWN ON THE MECHANICAL FLOOR PLANS.

16 DUCT SMOKE DETECTORS WHEN NOT PROVIDED PRE-INSTALLED BY THE EQUIPMENT MANUFACTURER SHALL BE INSTALLED IN THE SUPPLY AIR DUCT OF AIR-MOVING SYSTEMS SUPPLYING AIR IN EXCESS OF 2000 CFM. DETECTORS SHALL BE LOCATED BETWEEN THE SUPPLY AIR DUCT CONNECTION AT THE EQUIPMENT AND THE FIRST BRANCH DUCT OR DIFFUSER. WHERE FIRE-DETECTION OR ALARM SYSTEMS ARE PROVIDED FOR THE BUILDING, ALL SMOKE DETECTORS SHALL BE SUPERVISED BY SUCH SYSTEMS IN AN APPROVED MANNER, AND INSTALLED IN ACCORDANCE WITH NFPA 72 AND THE CALIFORNIA BUILDING AND FIRE CODES.

17 ALL EQUIPMENT SHALL BE LABELED AS TO THE SPACE THEY ARE SERVING.

18 HABITABLE SPACE SHALL BE PROVIDED WITH A HEATING SYSTEM CAPABLE OF MAINTAINING A MINIMUM INDOOR TEMPERATURE OF 68°F AT A POINT 3 FEET ABOVE THE FLOOR PER 2022 CBC 1203.

19 MATERIALS EXPOSED WITHIN ANY SPACE BEING USED AS AN AIR PLENUM SHALL BE NON COMBUSTIBLE OR SHALL HAVE A FLAME SPREAD INDEX NOT GREATER THAN 25 AND A SMOKE DEVELOPED INDEX NOT GREATER THAN 50, WHEN TESTED AS A COMPOSITE PRODUCT IN ACCORDANCE WITH ONE OF THE FOLLOWING TEST METHODS: NFPA 255, METHOD OF TEST OF SURFACE BURNING CHARACTERISTICS OF BUILDING MATERIALS, ASTM E84, SURFACE BURNING CHARACTERISTICS OF BUILDING MATERIALS, OR UL 723, TEST FOR SURFACE BURNING CHARACTERISTIC OF BUILDING MATERIALS.

20 ANY MECHANICAL EQUIPMENT THAT PROVIDES POWER TO A ENERGIZED ACCESSORY MUST BE PROVIDED WITH A NAMEPLATE THAT REFLECTS THE ELECTRICAL CHARACTERISTICS OF THE COMPLETE SYSTEM AS INSTALLED WITH THE ENERGIZED ACCESSORY. NO EXCEPTIONS.

MECHANICAL TITLE 24 NOTES

1 HVAC EQUIPMENT AND APPLIANCES SHALL MEET THE LATEST REQUIREMENTS OF THE CA ENERGY EFFICIENCY STANDARDS.

2 HVAC SYSTEMS SHALL MEET THE LATEST CONTROL REQUIREMENTS OF THE CA ENERGY EFFICIENCY STANDARDS.

3 DOORS AND WINDOWS SHALL MEET MINIMUM INFILTRATION REQUIREMENTS OF THE CA ENERGY EFFICIENCY STANDARDS.

4 ALL WORK SHALL BE IN ACCORDANCE WITH CITY AND COUNTY CODES, CALIFORNIA ENERGY CONSERVATION STANDARDS, TITLE - 24, AND ALL OTHER APPLICABLE CODES.

5 ALL PIPING AND DUCTWORK SHALL BE INSULATED CONSISTENT WITH THE LATEST REQUIREMENTS OF THE CA ENERGY EFFICIENCY STANDARDS.

CONTROLS LEGEND

SYMBOL	ABBREVIATION	DESCRIPTION
CO2	CO2	CARBON DIOXIDE SENSOR
T/CO2 AC-X	T/CO2	COMBINATION THERMOSTAT AND CARBON DIOXIDE SENSOR. ADJACENT TEXT INDICATES CONTROLLED EQUIPMENT
FSC EF-X	FSC	FAN SPEED CONTROLLER. ADJACENT TEXT INDICATES ASSOCIATED FAN
H		HUMIDISTAT
M		MOTORIZED DAMPER, DAMPER ACTUATOR
PP		PRESSURE PORT
P		PRESSURE SENSOR
S EF-X		SWITCH. ADJACENT TEXT INDICATES CONTROLLED EQUIPMENT
S/H ERV-X	S/H	COMBINATION SWITCH AND HUMIDISTAT. ADJACENT TEXT INDICATES CONTROLLED EQUIPMENT
T AC-#		THERMOSTAT. ADJACENT TEXT INDICATES CONTROLLED EQUIPMENT
TC	TC	TIME CLOCK
TI	TI	TIMER
SCP	SCP	SUPERVISORY CONTROL PANEL
SS	SS	SAFETY SWITCH
TCP	TCP	TEMPERATURE CONTROL PANEL
TS	TS	TEMPERATURE SENSOR
VFD	VFD	VARIABLE FREQUENCY DRIVE
VEXC	VEXC	VEHICLE EXHAUST CONTROL PANEL
———		LOW VOLTAGE BY MECHANICAL

MECHANICAL ABBREVIATIONS

AC	AIR CONDITION, AIR CONDITIONING, AIR CONDITIONED	HP	HORSE POWER
ABV	ABOVE	HVI	HOME VENTILATING INSTITUTE
AFF	ABOVE FINISHED FLOOR	HZ	HERTZ
AFUE	ANNUAL FUEL UTILIZATION EFFICIENCY	IDU	INDOOR UNIT
AHJ	AUTHORITY HAVING JURISDICTION	IWC	INCHES OF WATER COLUMN
AHU	AIR HANDLING UNIT	KW	KILOWATT
ALUM	ALUMINUM	LBS	POUNDS
AMCA	AIR MOVEMENT AND CONTROL ASSOCIATION	LWT	LEAVING WATER TEMPERATURE
AMB	AMBIENT	MBH	1000 BRITISH THERMAL UNITS PER HOUR
AP	ACCESS PANEL	MCA	MINIMUM CIRCUIT AMPS
ARCH	ARCHITECT, ARCHITECTURAL	MFGR	MANUFACTURE OR MANUFACTURER
AHRI	AIR CONDITIONING, HEATING, AND REFRIGERATION INSTITUTE	MIN	MINIMUM
ASHRAE	AMERICAN SOCIETY OF HEATING, REFRIGERATION, AND AIR CONDITIONING ENGINEERS	MUA	MAKE-UP AIR
BDD	BACK DRAFT DAMPER	(N)	NEW
BOD	BASIS OF DESIGN	NL	NOT LISTED
BEL	BELOW	NOM	NOMINAL
BHP	BRAKE HORSE POWER	NTS	NOT TO SCALE
BLDG	BUILDING	OA	OUTSIDE AIR
BTUH	BRITISH THERMAL UNIT PER HOUR	OAI	OUTSIDE AIR INTAKE
CA	COMBUSTION AIR	OBD	OPPOSED BLADE DAMPER
CD	CONDENSATE DRAIN	ODU	OUTDOOR UNIT
CFD	CEILING FIRE DAMPER	OSHPD	OFFICE OF STATEWIDE HEALTH PLANNING AND DEVELOPMENT
CFM	CUBIC FEET PER MINUTE	PD	PRESSURE DROP
CONT	CONTINUATION	PSI	POUNDS PER SQUARE INCH
CSD	CEILING SMOKE DAMPER	RA	RETURN AIR
DB	DRY BULB TEMPERATURE	REF	REFRIGERANT, REFRIGERATION
DN	DOWN	RM	ROOM
DSA	DIVISION OF THE STATE ARCHITECT	RPM	REVOLUTIONS PER MINUTE
DTR	DOWN THROUGH ROOF	SA	SUPPLY AIR
(E)	EXISTING	SEER	SEASONAL ENERGY EFFICIENCY RATION
EA	EXHAUST AIR	SHT	SHEET
EC	EVAPORATIVE COOLER	SMACNA	SHEET METAL AND AIR CONDITIONING CONTRACTORS NATIONAL ASSOCIATION
EDB	ENTERING DRY BULB TEMPERATURE	SOV	SHUT OFF VALVE
EER	ENERGY EFFICIENCY RATIO	SP	STATIC PRESSURE
EFF	EFFICIENCY	SS	STAINLESS STEEL
ELEC	ELECTRICAL	SSE	STEADY STATE EFFICIENCY
ESP	EXTERNAL STATIC PRESSURE	SST	SATURATED SUCTION TEMPERATURE
EWB	ENTERING WET BULB	TEMP	TEMPORARY, TEMPERATURE
EWT	ENTERING WATER TEMPERATURE	TSP	TOTAL STATIC PRESSURE
FA	FROM ABOVE	TYP	TYPICAL
FC	FLEXIBLE CONNECTION	TXV	THERMAL EXPANSION VALVE
FD	FIRE DAMPER	UON	UNLESS OTHERWISE NOTED
FLA	FULL LOAD AMPS	UTR	UP TO OR UP THROUGH ROOF
FPM	FEET PER MINUTE	VD	VOLUME DAMPER
FSC	FAN SPEED CONTROLLER	VEX	VEHICLE EXHAUST SYSTEM
FSD	FIRE/SMOKE DAMPER	VRF	VARIABLE REFRIGERANT VOLUME
GA	GAGE, GAUGE	WB	WET BULB TEMPERATURE
GALV	GALVANIZED	WC	WATER COLUMN
GPM	GALLONS PER MINUTE	WG	WATER GAUGE
GYP	GYPSUM	WT	WEIGHT EXPRESSED IN POUNDS
HD	HEAD		

MECHANICAL LEGEND

SYMBOL	ABBREVIATION	DESCRIPTION
Ø	DIA	DIAMETER
		CEILING MOUNTED SUPPLY OR OUTSIDE AIR DIFFUSER
		CEILING MOUNTED RETURN AIR GRILLE
		CEILING MOUNTED EXHAUST AIR GRILLE
		SIDEWALL MOUNTED SUPPLY AIR DIFFUSER, RETURN AIR GRILLE, LOUVER
	24X12, 24X12 FO	RECTANGULAR, FLAT OVAL DUCT
	24X12L, 12ØL	LINED DUCT
		RECTANGULAR SUPPLY / OA, RETURN, EXHAUST / RELIEF DUCT PASSING THROUGH PLAIN OF VIEW
		RECTANGULAR SUPPLY / OA, RETURN, EXHAUST / RELIEF DUCT TURNING DOWN
	12Ø	ROUND DUCT
		ROUND DUCT TURNING DOWN, ROUND DUCT TURNING UP
		90° ELBOW WITH TURNING VAINS
	FC	FLEXIBLE CONNECTION
	VD	MANUAL VOLUME DAMPER
		ACCESS CLEARANCE
		WALL CAP
		CEILING EXHAUST FAN
REF REF		REFRIGERATION LINES
		REFRIGERATION ISOLATION VALVE
22x30 MIN AP	AP	ACCESS PANEL. SIZE GIVEN INDICATES MINIMUM SIZE REQUIRED

PROJECT TEAM LIST

TITLE	NAME	DESK NUMBER	EMAIL ADDRESS
PRINCIPAL IN CHARGE	BRIAN STARRETT	805.634.6159	BSTARRETT@EMCOR.NET
PROJECT MANAGER	DENVER STANGER	805.634.8711	DSTANGER@EMCOR.NET
MECHANICAL DESIGNER	DREW SCHMIDT	805.634.8753	DSCHMIDT@EMCOR.NET
PLUMBING DESIGNER	ELI FERMAN	805.634.8818	EFERMAN@EMCOR.NET
ENERGY COMPLIANCE	JORGE BRAVO	805.595.0894	JBRAVO@EMCOR.NET

SHEET INDEX

SHEEET NUMBER	SHEET TITLE
M0.0	MECHANICAL GENERAL
M0.1	MECHANICAL SCHEDULES
M0.2	MECHANICAL DETAILS
M0.3	MECHANICAL DETAILS
M1.0	ZONING PLAN
M2.0	FLOOR PLAN

REV.	DESCRIPTION	CK'D	APP	DATE

PUBLIC WORKS DEPARTMENT ENGINEERING DIVISION
CITY OF SAN BUENAVENTURA

FIRE STATION NO. 7
MECHANICAL
GENERAL

DRN. BY: TO | DES. BY: EF | CK'D. BY: DS

PRINCIPAL ENGINEER — DATE: 5 May 2026
CITY ENGINEER — DATE: 5/7/2026

SPEC. NUMBER 2025-010 | PROJECT NUMBER FA11-1061

April 17, 2026 | SHEET 75 OF 151 | DWG. NO. 2025-D-010

ENGINEERING SHEET NO. M0.0

REGISTERED PROFESSIONAL ENGINEER — BRIAN P. STARRETT — M 34068 — EXP. 6/30/26 — MECHANICAL — STATE OF CALIFORNIA

BY Mesa Energy Systems, Inc., ALL COMMON LAW COPYRIGHT AND OTHER PROPERTY RIGHTS RESERVE THIS DOCUMENT AS AN ORIGINAL AND UNPUBLISHED WORK PRODUCT. THIS WORK SHALL NOT BE DUPLICATED, COPIED, DISCLOSED OR USED IN CONNECTION WITH ANY WORK OR PROJECT OTHER THAN THE SPECIFIC PROJECT FOR WHICH IT HAS BEEN PREPARED, NOR SHALL IT BE ASSIGNED TO ANY THIRD PARTY WITHOUT FIRST OBTAINING THE EXPRESS WRITTEN CONSENT OF VISUAL CONTACT. THIS DOCUMENT SHALL CONSTITUTE CONCLUSIVE EVIDENCE OF ACCEPTANCE OF THESE RESTRICTIONS.

3C Engineering
An EMCOR Company
(805) 540 3363
1500 Fulton St, San Luis Obispo, CA, 93401

COMMERCIAL GRILLE, REGISTER, DIFFUSER, LOUVER SCHEDULE

FD = FIRE DAMPER
FSD = FIRE/SMOKE DAMPER
OAI = OUTSIDE AIR INTAKE
X"Ø = INLET SIZE (IF APPLICABLE)

FD S1 400 12x12
- CFM
- DIFFUSER, GRILLE, LOUVER
- NECK SIZE (length x width or length x height) OR LINEAR DIFFUSER LENGTH
- MARK: S = SUPPLY; R = RETURN; E = EXHAUST; T = TRANSFER; L = LOUVER; O = OUTSIDE AIR

CEILING SUPPLY DEFLECTION LEGEND (EXCEPT FOR 4-WAY DEFLECTION, SHADING INDICATES ACTIVE SECTION OF DIFFUSER)

4-WAY | 3-WAY | 2-WAY CORNER | 2-WAY OPPOSITE | 1-WAY

TAG	TYPE	MAKE	MODEL	BORDER TYPE		CONSTRUCTION	FINISH	IMAGE	REMARKS	INSTALLATION DETAIL
				GYP BOARD CEILING OR WALL	LAY-IN CEILING					
L1	4" WALL LOUVER	GREENHECK	ESJ-401	PROVIDE WITH 1-1/2" FLANGE ACCESSORY		ALUMINUM	PRIMER		PROVIDE WITH BIRD SCREEN WHEN USED FOR OUTSIDE AIR INTAKE OR EXHAUST AIR DISCHARGE. PROVIDE WITH INSECT SCREEN WHEN USED FOR COMBUSTION AIR. PAINT PER ARCHITECTURAL REQUIREMENTS	NA
L2	4" COMBINATION WALL LOUVER/DAMPER	GREENHECK	EACC-401	PROVIDE WITH 1-1/2" FLANGE ACCESSORY		ALUMINUM	PRIMER		PROVIDE WITH 120V POWER OPEN / FAIL CLOSE ACTUATOR. ACTUATOR SHALL BE ACCESSIBLE FROM THE INTERIOR. PROVIDE WITH FILTER RACK WITH 1" ALUMINUM FILTERS. PROVIDE WITH 316 SS AXLE. PROVIDE WITH BIRD SCREEN. PAINT PER ARCHITECTURAL REQUIREMENTS	NA

VEHICLE EXHAUST SYSTEM SCHEDULE

TAG	MAKE	MODEL	QTY	DESCRIPTION	COMMENTS	OPERATING WEIGHT LBS	INSTALLATION DETAIL
VEXF 1	PLYMOVENT	TEV-559	1	EXHAUST FAN, DIRECT DRIVE, EPOXY POWDER COAT FINISH, 208/3/60, 13.3 FLA, TEFC 5 HP MOTOR. COMPLETE WITH SAF-5 SOUND ABSORBING FAN ENCLOSURE.	PROVIDE WITH 10" DIAMETER ALAN ITEM #1481 SILENCER AND UP-BLAST STACK CAP (WEATHER HOOD)..	480	8/M0.2
VEXC 1	PLYMOVENT	OS-3	1	EXHAUST FAN CONTROL PANEL, 16X12X6-1/2", AUTOMATIC / MANUAL / STOP MODES. COMPLETE WITH PRESSURE SENSORS FOR FAN ACTIVATION WHEN VEHICLE ENGINE STARTS, MOTOR STARTER AND ADJUSTABLE TIMER.	MOUNT CONTROL PANEL ON WALL AT 48" AFF, REFER TO FLOOR PLAN FOR LOCATION. ELECTRICAL CONTRACTOR SHALL PROVIDE CONDUIT AND LINE VOLTAGE WIRING TO THE CONTROL PANEL AND FROM THE CONTROL PANEL TO THE EXHAUST FAN.	NA	NA
VEXI 1	UAS	SFR	1	FILTER HOUSING, SIZE B, 1X1, (1)24X24X2 30% PRE-FILTER, (1)24X24X12 85% FINAL FILTER	PROVIDE 36" OF STRAIGHT DUCT ON THE INLET SIDE OF THE FILTER HOUSING	105	8/M0.2
VEXR 1	PLYMOVENT	VSRX-75	1	STRAIGHT RAIL FOR DRIVE THRU APPARATUS BAY, (1) VEHICLE, 75' LONG, (7) RAIL UPRIGHTS. COMPLETE WITH CRAB ASSEMBLY AND AUTO-CRAB RETURN, BALANCER, SADDLE AND HOSE LOOP FOR 20' LONG, 4Ø HOSE, AND MAGNETIC TAILPIECE ADAPTER.	ELECTRICAL CONTRACTOR SHALL PROVIDE 120V/15A RECEPTACLE ON LAST RAIL UPRIGHT CLOSEST TO THE ENTRY SIDE OF THE BAY PER RAIL, MAX 48" ABOVE THE RAIL, REFER TO INSTALLATION DETAILS.	665	6/M0.2, 7/M0.2
VEXR 2	PLYMOVENT	VSRX-85	1	STRAIGHT RAIL FOR DRIVE THRU APPARATUS BAY, (1) VEHICLE, 85' LONG, (8) RAIL UPRIGHTS. COMPLETE WITH CRAB ASSEMBLY AND AUTO-CRAB RETURN, BALANCER, SADDLE AND HOSE LOOP FOR 20' LONG, 4Ø HOSE, AND MAGNETIC TAILPIECE ADAPTER.		745	6/M0.2, 7/M0.2
VEXR 3	PLYMOVENT	VSRX-75	1	STRAIGHT RAIL FOR DRIVE THRU APPARATUS BAY, (1) VEHICLE, 75' LONG, (7) RAIL UPRIGHTS. COMPLETE WITH CRAB ASSEMBLY AND AUTO-CRAB RETURN, BALANCER, SADDLE AND HOSE LOOP FOR 20' LONG, 4Ø HOSE, AND MAGNETIC TAILPIECE ADAPTER.		665	6/M0.2, 7/M0.2

VEHICLE EXHAUST SYSTEM MAJOR COMPONENTS ARE LISTED ABOVE. THIS LIST IS PROVIDED FOR COORDINATION BETWEEN THE VARIOUS DISCIPLINES AND DOES NOT REFLECT ALL OF THE COMPONENTS REQUIRED FOR A COMPLETE SYSTEM.

THE VEHICLE EXHAUST SYSTEM (VEX SYSTEM) SHALL BE PROVIDED UNDER THIS CONTRACT BY AN AUTHORIZED PLYMOVENT CONTRACTOR (VEX CONTRACTOR). THE GENERAL CONTRACTOR SHALL DIRECTLY HIRE THE VEX CONTRACTOR TO INSTALL THE VEX SYSTEM. THE GENERAL CONTRACTOR SHALL COOPERATE AND COORDINATE WITH THE VEX CONTRACTOR TO PROVIDE THE SUPPORT INFRASTRUCTURE NECESSARY TO PROVIDE A COMPLETE SYSTEM. VEX CONTRACTOR SHALL PROVIDE A COMPLETE AND OPERATIONAL SYSTEM INCLUDING BUT NOT LIMITED TO ALL SUPPORTS, DUCTING, COMPRESSED AIR TUBING AND FITTINGS, VEHICLE TAILPIPE ADAPTERS AND SYSTEM START-UP.

FOR PRICING AND INSTALLATION CONTACT:
AIR EXCHANGE INC.
JOHN WHITNEY
1-909-923-7952
JOHN.WHITNEY@AIREXCHANGE.COM

DUCTLESS SPLIT SYSTEM HEAT PUMP SCHEDULE

TAG	MAKE	NOM TONS	SENSIBLE COOLING	REFRIGERANT	AHRI PERFORMANCE						INDOOR UNIT							OUTDOOR UNIT						REMARKS SEE BELOW
					COOLING			HEATING																
					BTUH	SEER2	EER2	BTUH AT 47°F	BTUH AT 17°F	HSPF2	MODEL	INSTALLATION TYPE	POWERED BY OUTDOOR UNIT	CFM	WATTS [HP]	OPERATING WEIGHT LBS	INSTALLATION DETAIL	MODEL	POWER V/ϕ/HZ	MCA	MOCP	OPERATING WEIGHT LBS	INSTALLATION DETAIL	
DS 1	TOSHIBA CARRIER	1.5	13,610	R-454B	18,000	23.8	12	20,000	12,500	10.4	RAV-HB181KRTP	HIGHWALL	YES	530	30	35	2/M0.2	RAV-BP181AT2P	208/1/60	14	25	85	1/M0.2	C1

GENERAL NOTES APPLICABLE TO ALL UNITS:
A. DISCONNECT PROVIDED BY ELECTRICAL CONTRACTOR.
B. UNIT SHALL BE CONFIGURED FOR COOLING ONLY.
C. SIZE REFRIGERATION LINES PER THE MANUFACTURERS REQUIREMENTS FOR TOTAL DEVELOPED LINE LENGTH.

CONTROL NOTES:
C1. PROVIDE WITH MANUFACTURERS MODEL RBC-AMS54E-UL 7-DAY PROGRAMMABLE WIRED CONTROLLER.

EXHAUST FAN SCHEDULE

TAG	MAKE	MODEL	TYPE	DRIVE	PERFORMANCE					MOTOR		ACCESSORIES						OPERATING WEIGHT LBS	REMARKS SEE BELOW	INSTALLATION DETAIL
					CFM	ESP	RPM	OPERATING POWER WATTS [BHP]	SONES	POWER V/ϕ/HZ	NOM HP	BIRD GUARD	BACKDRAFT DAMPER	ROOF CURB	ROOF JACK	WALL CAP	FSC			
EF 1	GREENHECK	CUBE-220	WALL UPBLAST	BELT	3,000	0.25	504	[0.34]	7.16	120/1/60	0.5	YES	YES	NO	NO	NO	NO	140	1,C1	4/M0.2
EF 2	GREENHECK	CUBE-220	WALL UPBLAST	BELT	5,000	0.125	688	[0.79]	13.9	120/1/60	1.5	YES	YES	NO	NO	NO	NO	155	1,C1,C2	4/M0.2

GENERAL NOTES APPLICABLE TO ALL UNITS:
A. PROVIDE WITH MANUFACTURER'S NEMA-1 ENCLOSURE DISCONNECT SWITCH.

UNIT SPECIFIC NOTES:
1. PROVIDE WITH MANUFACTURER'S WALL BRACKET FOR Z-PERLIN MOUNTING.

CONTROL NOTES:
C1. CONTROL WITH ON/OFF SWITCH, REFER TO FLOOR PLAN FOR LOCATION. SWITCH PROVIDED BY ELECTRICAL.
C2. EXHAUST FAN SHALL BE INTERLOCKED WITH THE MOTORIZED DAMPER IN THE ROOM'S LOUVER(S) TO ACTIVATE THE DAMPER WHEN THE FAN IS ENERGIZED, REFER TO DETAIL 5/M0.2. SEE FLOOR PLAN FOR THE MOTORIZED DAMPER LOCATION.

ELECTRIC UNIT HEATER SCHEDULE

TAG	MAKE	MODEL	KW	CFM	INSTALLATION HEIGHT	THROW	HP	POWER V/ϕ/HZ	FLA	WEIGHT [LBS]	REMARKS SEE BELOW	INSTALLATION DETAIL
EUH 1	REZNOR	EUH-15	15	1215	12'	27'	0.07	208/3/60	31.2	85	C1	1/M0.3
EUH 2	REZNOR	EUH-15	15	1215	12'	27'	0.07	208/3/60	31.2	85	C1	1/M0.3

GENERAL NOTES APPLICABLE TO ALL UNITS:
A. DISCONNECT PROVIDED BY ELECTRICAL CONTRACTOR.
B. PROVIDE WITH AK-20 FACTORY-INSTALLED OPTION FOR 208/3/60 VOLTAGE.

CONTROL NOTES:
C1. PROVIDE WITH HONEYWELL MODEL TH8321WF1001 VISION PRO WI-FI CAPABLE PROGRAMMABLE THERMOSTAT. EUH-1 & EUH-2 SHALL BE TIED TOGETHER TO A SINGLE THERMOSTAT, SEE FLOOR PLANS FOR LOCATION.

CIRCULATION FAN SCHEDULE

TAG	MAKE	MODEL	BLADES	SIZE	RPM	FINISH	ELECTRICAL DATA		WEIGHT LBS	REMARKS
							POWER V/ϕ/HZ	HP		
CF 1	GREENHECK	DC-5-10	5	10'	140	SILVER WITH BLACK TRIM	120/1/60	1/4	80	1

GENERAL NOTES APPLICABLE TO ALL UNITS:
A. PROVIDE WITH MANUFACTURER'S I-BEAM MOUNTING KIT FOR I-BEAM MOUNTING. INSTALL PER MANUFACTURER'S REQUIREMENTS.
B. BASIS OF DESIGN IS AS SCHEDULED. GREENHECK AND PATTERSON ARE CONSIDERED EQUAL.

UNIT SPECIFIC NOTES:
1. CONTROL WITH SINGLE POLE SWITCH, REFER TO FLOOR PLAN FOR LOCATION. SWITCH PROVIDED BY ELECTRICAL.

REV.	DESCRIPTION	CK'D	APP	DATE

PUBLIC WORKS DEPARTMENT ENGINEERING DIVISION
CITY OF SAN BUENAVENTURA

FIRE STATION NO. 7
MECHANICAL
SCHEDULES

DRN. BY: TO | DES. BY: EF | CK'D. BY: DS

PRINCIPAL ENGINEER — DATE 5 May 2026
CITY ENGINEER — DATE 5/7/2026

SPEC. NUMBER 2025-010 | PROJECT NUMBER FA11-1061

April 17, 2026 | SHEET 76 OF 151 | DWG. NO. 2025-D-010

ENGINEERING SHEET NO. M0.1

REGISTERED PROFESSIONAL ENGINEER — ARTAN P. STARRA — M 34068 — EXP. 6/30/26 — MECHANICAL — STATE OF CALIFORNIA

3C Engineering
An EMCOR Company
(805) 540 3363
1500 Fulton St, San Luis Obispo, CA 93401

BY Mesa Energy Systems, Inc., ALL COMMON LAW COPYRIGHT AND OTHER PROPERTY RIGHTS RESERVE THIS DOCUMENT AS AN ORIGINAL AND UNPUBLISHED WORK PRODUCT. THIS WORK SHALL NOT BE DUPLICATED, COPIED, DISCLOSED OR USED IN CONNECTION WITH ANY WORK OR PROJECT OTHER THAN THE SPECIFIC PROJECT FOR WHICH IT HAS BEEN PREPARED, NOR SHALL IT BE ASSIGNED TO ANY THIRD PARTY WITHOUT FIRST OBTAINING THE EXPRESS WRITTEN CONSENT OF VISUAL CONTACT. THIS DOCUMENT SHALL CONSTITUTE CONCLUSIVE EVIDENCE OF ACCEPTANCE OF THESE RESTRICTIONS.

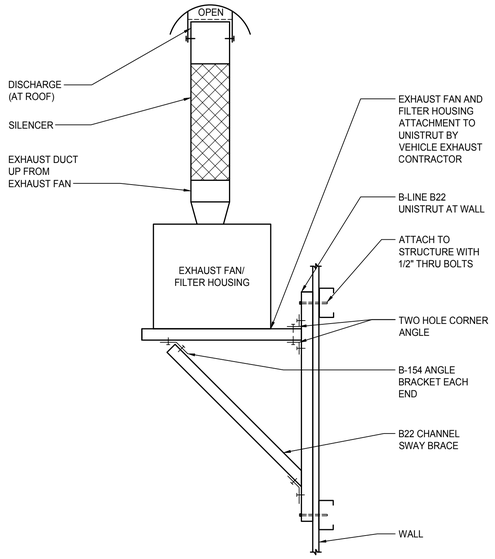

ELEVATION VIEW

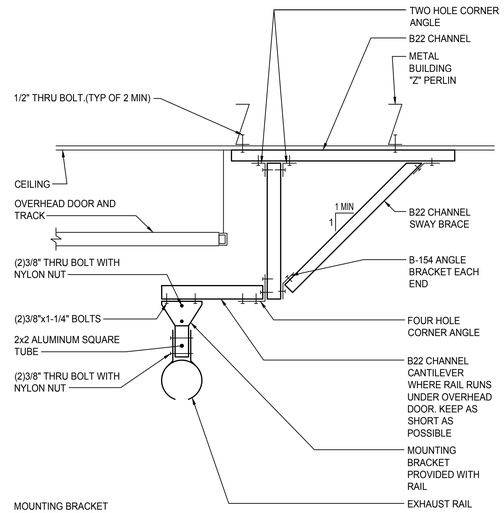

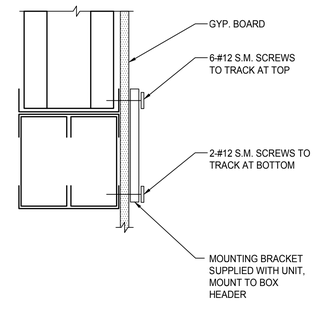

3 BOX BEAM FOR MOUNTING BRACKET SUPPORT
NTS

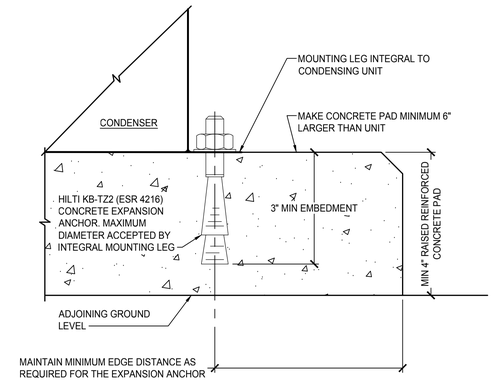

1 CONDENSING UNIT ANCHORAGE
NTS

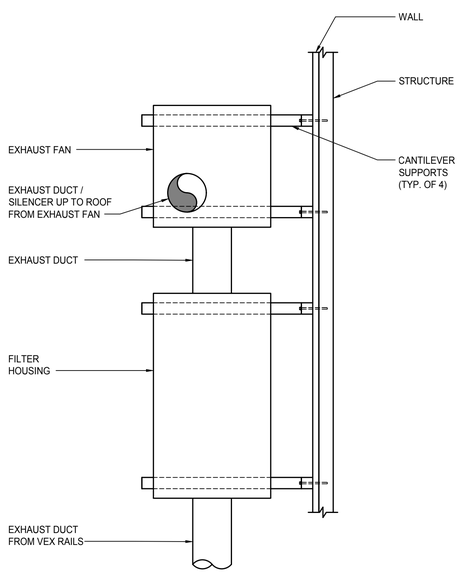

PLAN VIEW

8 VEX EXHAUST FAN ON CANTILEVER SUPPORT
NTS

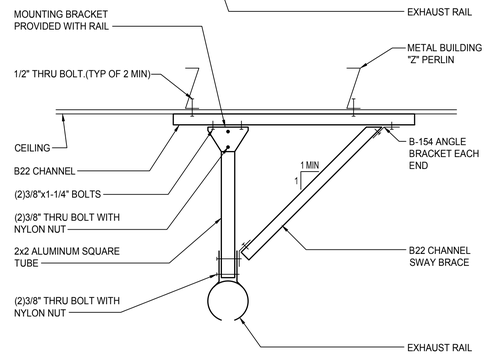

6 VEX STRA RAIL SUPPORT
NTS

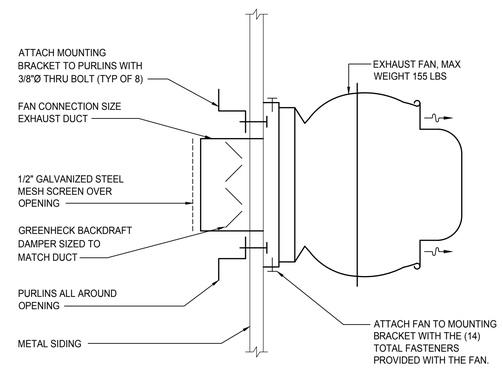

4 SIDEWALL EXHAUST FAN
NTS

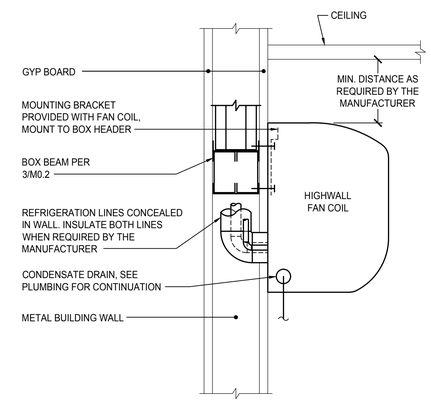

2 HIGH WALL FAN COIL MOUNTING (METAL FRAMING)
NTS

DETAIL NOTES

1	LINE VOLTAGE PROVIDED BY ELECTRICAL.
2	DAMPER ACTUATOR PROVIDED BY MECHANICAL. SET THE ADJUSTABLE AUXILIARY SWITCH TO "1" TO ACTIVATE S1 AND S3 CLOSURE WHEN DAMPER IS FULLY OPENED TO ENSURE THE EXHAUST FAN ENERGIZES AFTER DAMPER IS OPEN.
3	LINE VOLTAGE THERMOSTAT AS SPECIFIED IN THE EXHAUST FAN SCHEDULE OR SINGLE POLE, MAINTAINED ON/OFF TOGGLE SWITCH PROVIDED BY ELECTRICAL.
4	APPROPRIATELY SIZED 120VAC RELAY PROVIDED BY ELECTRICAL. MOUNT RELAY WITHIN THE ACTUATOR HOUSING AT THE LOUVER.

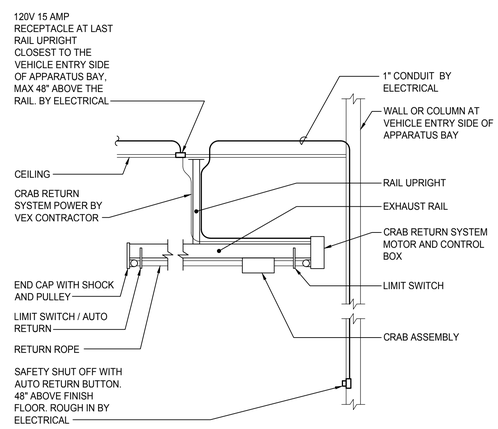

7 VEX AUTO CRAB RETURN
NTS

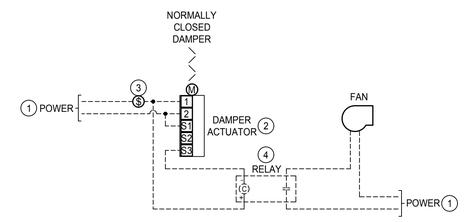

5 FAN INTERLOCK WITH DAMPER CONTROL DETAIL
NTS

REV.	DESCRIPTION	CK'D	APP	DATE

PUBLIC WORKS DEPARTMENT ENGINEERING DIVISION
CITY OF SAN BUENAVENTURA

FIRE STATION NO. 7 MECHANICAL DETAILS

DRN. BY: TO | DES. BY: EF | CK'D. BY: DS

PRINCIPAL ENGINEER — DATE: 5 May 2026

CITY ENGINEER — DATE: 5/7/2026

SPEC. NUMBER 2025-010 | PROJECT NUMBER FA11-1061

April 17, 2026 | SHEET 77 OF151 | DWG. NO. 2025-D-010

ENGINEERING SHEET NO. M0.2

REGISTERED PROFESSIONAL ENGINEER — ARTAN P. STARRA — M 34068 — EXP. 6/30/26 — MECHANICAL — STATE OF CALIFORNIA

BV Mesa Energy Systems, Inc., ALL COMMON LAW COPYRIGHT AND OTHER PROPERTY RIGHTS RESERVE THIS DOCUMENT AS AN ORIGINAL AND UNPUBLISHED WORK PRODUCT. THIS WORK SHALL NOT BE DUPLICATED, COPIED, DISCLOSED OR USED IN CONNECTION WITH ANY WORK OR PROJECT OTHER THAN THE SPECIFIC PROJECT FOR WHICH IT HAS BEEN PREPARED, NOR SHALL IT BE ASSIGNED TO ANY THIRD PARTY WITHOUT FIRST OBTAINING THE EXPRESS WRITTEN CONSENT OF VISUAL CONTACT. THIS DOCUMENT SHALL CONSTITUTE CONCLUSIVE EVIDENCE OF ACCEPTANCE OF THESE RESTRICTIONS.

3C Engineering
An EMCOR Company
(805) 540 3363
1500 Fulton St, San Luis Obispo, CA, 93401

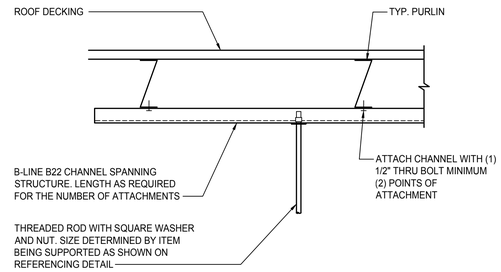

5 UPPER THREADED ROD CONNECTION
NTS

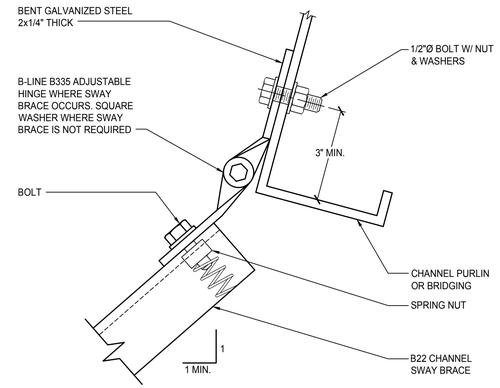

2 UPPER CONNECTION (SWAY BRACE)
NTS

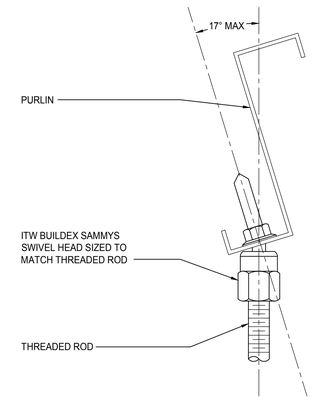

3 THREADED ROD UPPER CONNECTION
NTS

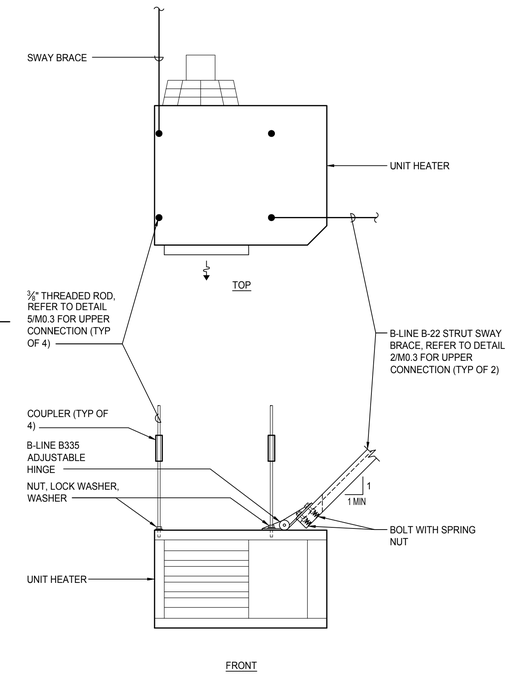

1 SUSPENDED ELECTRIC UNIT HEATER
NTS

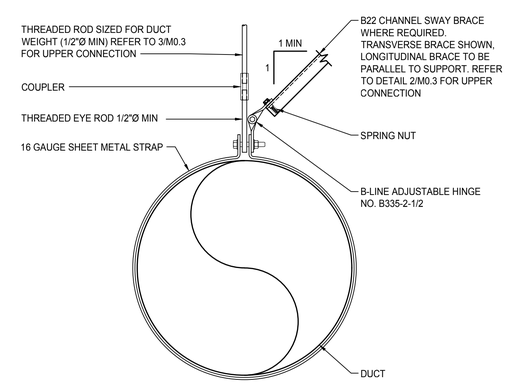

4 EXPOSED DUCT HANGER
NTS

BY Mesa Energy Systems, Inc., ALL COMMON LAW COPYRIGHT AND OTHER PROPERTY RIGHTS RESERVE THIS DOCUMENT AS AN ORIGINAL AND UNPUBLISHED WORK PRODUCT. THIS WORK SHALL NOT BE DUPLICATED, COPIED, DISCLOSED OR USED IN CONNECTION WITH ANY WORK OR PROJECT OTHER THAN THE SPECIFIC PROJECT FOR WHICH IT HAS BEEN PREPARED, NOR SHALL IT BE ASSIGNED TO ANY THIRD PARTY WITHOUT FIRST OBTAINING THE EXPRESS WRITTEN CONSENT OF VISUAL CONTACT. THIS DOCUMENT SHALL CONSTITUTE CONCLUSIVE EVIDENCE OF ACCEPTANCE OF THESE RESTRICTIONS.

3C Engineering
An EMCOR Company
(805) 540 3363
1500 Fulton St, San Luis Obispo, CA, 93401

REGISTERED PROFESSIONAL ENGINEER
MARTIAN P. STARNES
M 34068
EXP. 6/30/26
MECHANICAL
STATE OF CALIFORNIA

ENGINEERING SHEET NO. M0.3

REV.	DESCRIPTION	CK'D	APP	DATE

PUBLIC WORKS DEPARTMENT ENGINEERING DIVISION
CITY OF SAN BUENAVENTURA

FIRE STATION NO. 7 MECHANICAL DETAILS

DRN. BY: TO | DES. BY: EF | CK'D. BY: DS

PRINCIPAL ENGINEER — DATE: 5 May 2026

CITY ENGINEER — DATE: 5/7/2026

SPEC. NUMBER 2025-010 | PROJECT NUMBER FA11-1061

April 17, 2026 | SHEET 78 OF 151 | DWG. NO. 2025-D-010

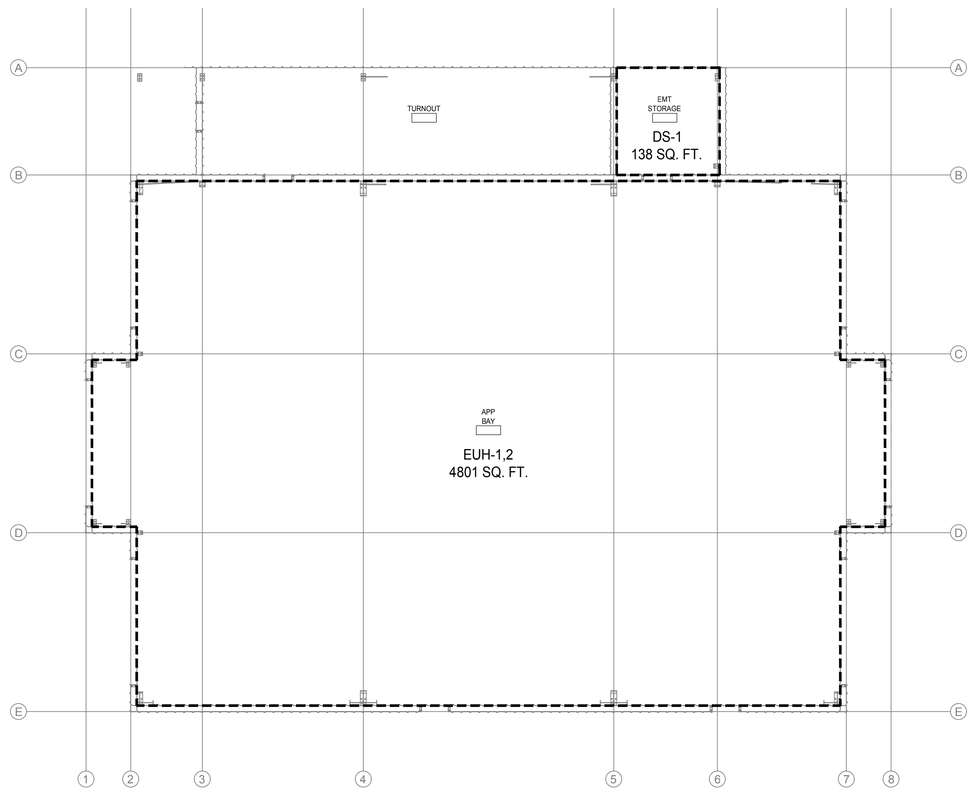

ZONING PLAN

SCALE: 1/8"= 1'-0"

REV.	DESCRIPTION	CK'D	APP	DATE

PUBLIC WORKS DEPARTMENT ENGINEERING DIVISION

CITY OF SAN BUENAVENTURA

FIRE STATION NO. 7
ZONING PLAN

ENGINEERING SHEET NO. M1.0

DRN. BY: TO | DES. BY: EF | CK'D. BY: DS

PRINCIPAL ENGINEER — 5 May 2026 DATE

CITY ENGINEER — 5/7/2026 DATE

SPEC. NUMBER 2025-010 | PROJECT NUMBER FA11-1061

April 17, 2026 | SHEET 79 OF 151 | DWG. NO. 2025-D-010

BY Mesa Energy Systems, Inc., ALL COMMON LAW COPYRIGHT AND OTHER PROPERTY RIGHTS RESERVE THIS DOCUMENT AS AN ORIGINAL AND UNPUBLISHED WORK PRODUCT. THIS WORK SHALL NOT BE DUPLICATED, COPIED, DISCLOSED OR USED IN CONNECTION WITH ANY WORK OR PROJECT OTHER THAN THE SPECIFIC PROJECT FOR WHICH IT HAS BEEN PREPARED, NOR SHALL IT BE ASSIGNED TO ANY THIRD PARTY WITHOUT FIRST OBTAINING THE EXPRESS WRITTEN CONSENT OF VISUAL CONTACT. THIS DOCUMENT SHALL CONSTITUTE CONCLUSIVE EVIDENCE OF ACCEPTANCE OF THESE RESTRICTIONS.

3C Engineering
An EMCOR Company
(805) 540-1563
1500 Palm St, San Luis Obispo, CA, 93401

REGISTERED PROFESSIONAL ENGINEER
BRIAN P. STARRETT
M 34068
EXP. 6/30/26
MECHANICAL
STATE OF CALIFORNIA

HVAC GENERAL NOTES

APPLICABLE TO THIS SHEET ONLY

1	VERIFY FINAL THERMOSTAT LOCATIONS WITH OWNER PRIOR TO INSTALLATION. IF OWNER INTENDS TO CHANGE LOCATION OF THERMOSTAT, CONTACT ENGINEER OF RECORD PRIOR TO FINALIZING LOCATION.
2	REFER TO DETAIL 4/M0.3 FOR EXPOSED DUCT SUPPORT.

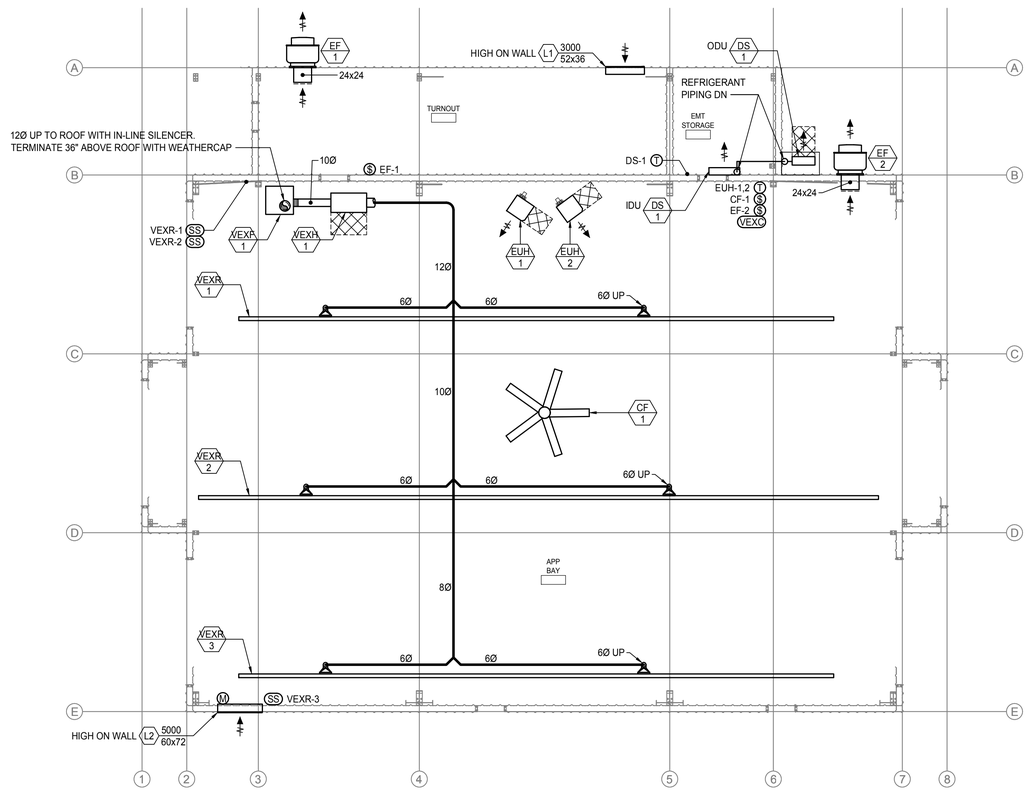

FLOOR PLAN

SCALE: 1/8"= 1'-0"

REV.	DESCRIPTION	CK'D	APP	DATE

PUBLIC WORKS DEPARTMENT ENGINEERING DIVISION

CITY OF SAN BUENAVENTURA

FIRE STATION NO. 7
FLOOR PLAN

DRN. BY: TO | DES. BY: EF | CK'D. BY: DS

PRINCIPAL ENGINEER — DATE: 5 May 2026

CITY ENGINEER — DATE: 5/7/2026

SPEC. NUMBER 2025-010 | PROJECT NUMBER FA11-1061

April 17, 2026 | SHEET 80 OF 151 | DWG. NO. 2025-D-010

ENGINEERING SHEET NO. M2.0

BY Mesa Energy Systems, Inc., ALL COMMON LAW COPYRIGHT AND OTHER PROPERTY RIGHTS RESERVE THIS DOCUMENT AS AN ORIGINAL AND UNPUBLISHED WORK PRODUCT. THIS WORK SHALL NOT BE DUPLICATED, COPIED, DISCLOSED OR USED IN CONNECTION WITH ANY WORK OR PROJECT OTHER THAN THE SPECIFIC PROJECT FOR WHICH IT HAS BEEN PREPARED, NOR SHALL IT BE ASSIGNED TO ANY THIRD PARTY WITHOUT FIRST OBTAINING THE EXPRESS WRITTEN CONSENT OF VISUAL CONTACT. THIS DOCUMENT SHALL CONSTITUTE CONCLUSIVE EVIDENCE OF ACCEPTANCE OF THESE RESTRICTIONS.

3C Engineering
An EMCOR Company
(805) 540 3363
1500 Fulton St, San Luis Obispo, CA, 93401

REGISTERED PROFESSIONAL ENGINEER — JONATHAN P. STARNES — M 34068 — EXP. 6/30/26 — MECHANICAL — STATE OF CALIFORNIA

PROJECT TEAM LIST

TITLE	NAME	DESK NUMBER	EMAIL ADDRESS
PRINCIPAL IN CHARGE	BRIAN STARRETT	805.634.6159	BSTARRETT@EMCOR.NET
PROJECT MANAGER	DENVER STANGER	805.634.8711	DSTANGER@EMCOR.NET
MECHANICAL DESIGNER	DREW SCHMIDT	805.634.8753	DSCHMIDT@EMCOR.NET
PLUMBING DESIGNER	ELI FERMAN	805.634.8818	EFERMAN@EMCOR.NET
ENERGY COMPLIANCE	JORGE BRAVO	805.595.0894	JBRAVOANGELES@EMCOR.NET

SHEET INDEX

SHEET NUMBER	SHEET TITLE
T24.0	ENERGY COMPLIANCE DOCUMENTATION
T24.1	ENERGY COMPLIANCE DOCUMENTATION

C4. SOURCE ENERGY COMPLIANCE RESULTS FOR PERFORMANCE COMPONENTS (Annual SOURCE Energy Use, kBtu/ft² /yr)

COMPLIES[2]

Energy Component	Standard Design (SOURCE)	Proposed Design (SOURCE)	Compliance Margin (SOURCE)[1]
Space Heating	2.24	3.56	-1.32
Space Cooling	0.08	1.11	-1.03
Indoor Fans	5.25	1.87	3.38
Heat Rejection	0	0	0
Pumps & Misc.	0	0	0
Domestic Hot Water	1.05	0.07	0.98
Indoor Lighting	0.18	0.18	0
Flexibility	---	---	---
EFFICIENCY COMPLIANCE TOTAL	**8.8**	**6.79**	**2.01 (22.8%)**
Photovoltaics	---	---	---
Batteries	---	---	---
TOTAL COMPLIANCE	**8.8**	**6.79**	**2.01 (22.8%)**

[1] Notes: This number in parenthesis following the Compliance Margin in column 4, represents the Percent Better than Standard.

C1. COMPLIANCE SUMMARY

COMPLIES[3]

	Time Dependent Valuaton (TDV)		Source Energy Use
	Efficiency[1] (kBtu/ft² - yr)	Total[2] (kBtu/ft² - yr)	Total[2] (kBtu/ft² - yr)
Standard Design	77.58	77.58	8.8
Proposed Design	73.47	73.47	6.79
Compliance Margins	**4.11**	**4.11**	**2.01**
	Pass	**Pass**	**Pass**

[1] Efficiency measures include improvements like a better building envelope and more efficient equipment
[2] Compliance Totals include efficiency, photovoltaics and batteries
[3] New Construction, Complete Addition Scope: Building complies when all efficiency and total compliance margins are greater than or equal to zero and unmet load hour limits are not exceeded
Existing, Addition and Alteration Scope: Building complies when efficiency compliance margin is greater than or equal to zero and unmet load hour limits are not exceeded

C5. SOURCE ENERGY RESULTS FOR NON-REGULATED COMPONENTS[1]

Non-Regulated Energy Component	Standard Design (SOURCE)	Proposed Design (SOURCE)	Compliance Margin (SOURCE)[1]
Receptacle	0.51	0.51	---
Process	---	---	---
Other Ltg	---	---	---
Process Motors	---	---	---
TOTAL (TOTAL COMPLIANCE + NON-REGULATED COMPONENTS)	**9.31**	**7.3**	**2.01 (21.6%)**

[1] Notes: This table is not used for Energy Code Compliance.

C6. 'ABOVE CODE' QUALIFICATIONS

☐ This project is pursuing CalGreen Tier 1 ☐ This project is pursuing CalGreen Tier 2

C2. TDV ENERGY COMPLIANCE RESULTS FOR PERFORMANCE COMPONENTS (Annual TDV Energy Use, kBtu/ft² - yr)

COMPLIES[2]

Energy Component	Standard Design (TDV)	Proposed Design (TDV)	Compliance Margin (TDV)[1]
Space Heating	15.22	23.76	-8.54
Space Cooling	2.38	26.87	-24.49
Indoor Fans	54.75	19.68	35.07
Heat Rejection	0	0	0
Pumps & Misc.	0	0	0
Domestic Hot Water	2.91	0.84	2.07
Indoor Lighting	2.32	2.32	0
Flexibility	---	---	---
EFFICIENCY COMPLIANCE TOTAL	**77.58**	**73.47**	**4.11 (5.3%)**
Photovoltaics	---	---	---
Batteries	---	---	---
TOTAL COMPLIANCE	**77.58**	**73.47**	**4.11 (5.3%)**

[1] Notes: This number in parenthesis following the Compliance Margin in column 4, represents the Percent Better than Standard.

Project Name: Ventura FS7 Interim **Date Prepared:** 2026-04-16

A. General Information

1	Project Name	Ventura FS7 Interim			
2	Run Title	Title 24 Analysis			
3	Project Location	2269 Alessandro Drive, Ventura 93001			
4	City	Ventura	5	Standards Version	Compliance 2022
6	Zip code	93001	7	Compliance Software (version)	EnergyPro 9.4
8	Climate Zone	6	9	Building Orientation (deg)	182
10	Building Type(s)	• Nonresidential	11	Weather File	OXNARD_STYP20.epw
12	Project Scope	• New envelope and mechanical	13	Number of Dwelling Units	0
14	Total Conditioned Floor Area in Scope (ft²)	5710	15	Total # of hotel/motel rooms	0
16	Total Unconditioned Floor Area (ft²)	0	17	Fuel Type	Natural gas
18	Nonresidential Conditioned Floor Area	5710	19	Total # of Stories (Habitable Above Grade)	1
20	Residential Conditioned Floor Area	0			

C7. ENERGY USE SUMMARY

Energy Component	Standard Design Site (MWh)	Proposed Design Site (MWh)	Margin (MWh)	Standard Design Site (MBtu)	Proposed Design Site (MBtu)	Margin (MBtu)
Space Heating	3	4.3	-1.3	---	---	---
Space Cooling	0.4	5.9	-5.5	---	---	---
Indoor Fans	11	3.9	7.1	---	---	---
Heat Rejection	---	---	---	---	---	---
Pumps & Misc.	---	---	---	---	---	---
Domestic Hot Water	---	0.2	---	6.5	---	---
Indoor Lighting	0.5	0.5	0	---	---	---
Flexibility	---	---	---	---	---	---
EFFICIENCY TOTAL	**14.9**	**14.8**	**0.1**	**6.5**	**0**	**6.5**
Photovoltaics	---	---	---	---	---	---
Batteries	---	---	---	---	---	---
ENERGY USE SUBTOTAL	**14.9**	**14.8**	**0.1**	**6.5**	**0**	**6.5**
Receptacle	1.6	1.6	0	---	---	---
Process	---	---	---	---	---	---
Other Ltg	---	---	---	---	---	---
Process Motors	---	---	---	---	---	---
ENERGY USE TOTAL	**16.5**	**16.4**	**0.1**	**6.5**	**0**	**6.5**

C3. TDV ENERGY RESULTS FOR NON-REGULATED COMPONENTS[1]

Non-Regulated Energy Component	Standard Design (TDV)	Proposed Design (TDV)	Compliance Margin (TDV)[1]
Receptacle	7.14	7.14	---
Process	---	---	---
Other Ltg	---	---	---
Process Motors	---	---	---
TOTAL (TOTAL COMPLIANCE + NON-REGULATED COMPONENTS)	**84.72**	**80.61**	**4.11 (4.9%)**

[1] Notes: This table is not used for Energy Code Compliance.

B. PROJECT SUMMARY

Table B shows which building components are included in the performance calculation. If indicated as not included, the project must show compliance prescriptively if within the permit application.

Building Components Complying via Performance						Building Components Complying Prescriptively	
Envelope (See Table G)	Nonres	Performance	Solar Thermal Water Heating (See Table I3)	☐	Performance	The following building components are ONLY eligible for prescriptive compliance and should be documented on the NRCC form listed if within the scope of the permit application (i.e. compliance will not be shown on the NRCC-PRF-E).	
	MultiFam	Not Included		☒	Not Included		
Mechanical (See Table H)	Nonres	Performance	Covered Process: Commercial Kitchens (see Table J)	☐	Performance	Indoor Lighting (Unconditioned) 140.6 & 170.2(e)	NRCC-LTI-E is required
	MultiFam	Not Included		☒	Not Included	Outdoor Lighting 140.7 & 170.2(e)	NRCC-LTO-E is required
Domestic Hot Water (See Table I)	Nonres	Performance	Covered Process: Laboratory Exhaust (see Table J)	☐	Performance	Sign Lighting 140.8 & 170.2(e)	NRCC-LTS-E is required
	MultiFam	Not Included		☒	Not Included	**Building Components Complying with Mandatory Measures**	
Lighting (Indoor Conditioned, see Table K)	Nonres	Not Included	Photovoltaics (see Table F)	☐	Performance	Electrical power systems, commissioning, solar ready, elevator and escalator requirements are mandatory and should be documented on the NRCC form listed if applicable (i.e. compliance will not be shown on the NRCC-PRF-E.)	
	MultiFam	Not Included		☒	Not Included	Electrical Power Distribution 110.11	NRCC-ELC-E is required
			Battery (see Table F)	☐	Performance	Commissioning 120.8	NRCC-CXR-E is required
				☒	Not Included	Solar and Battery 110.10	NRCC-SAB-E is required

BY Mesa Energy Systems, Inc., ALL COMMON LAW COPYRIGHT AND OTHER PROPERTY RIGHTS RESERVE THIS DOCUMENT AS AN ORIGINAL AND UNPUBLISHED WORK PRODUCT. THIS WORK SHALL NOT BE DUPLICATED, COPIED, DISCLOSED OR USED IN CONNECTION WITH ANY WORK OR PROJECT OTHER THAN THE SPECIFIC PROJECT FOR WHICH IT HAS BEEN PREPARED. NOR SHALL IT BE ASSIGNED TO ANY THIRD PARTY WITHOUT FIRST OBTAINING THE EXPRESS WRITTEN CONSENT OF VISUAL CONTACT. THIS DOCUMENT SHALL CONSTITUTE CONCLUSIVE EVIDENCE OF ACCEPTANCE OF THESE RESTRICTIONS.

3C Engineering
An EMCOR Company
(805) 540 1300
1500 Palm St, San Luis Obispo, CA, 93401

REGISTERED PROFESSIONAL ENGINEER BRIAN P. STARRETT M 34068 EXP. 6/30/26 MECHANICAL STATE OF CALIFORNIA

ENGINEERING SHEET NO. T24.0

REV.	DESCRIPTION	CK'D	APP	DATE

PUBLIC WORKS DEPARTMENT ENGINEERING DIVISION
CITY OF SAN BUENAVENTURA

FIRE STATION NO. 7 ENERGY COMPLIANCE DOCUMENTATION

DRN. BY: TO DES. BY: EF CK'D. BY: DS

PRINCIPAL ENGINEER 5 May 2026 DATE

CITY ENGINEER 5/7/2026 DATE

SPEC. NUMBER 2025-010 PROJECT NUMBER FA11-1061

April 17, 2026 SHEET 81 OF 151 DWG. NO. 2025-D-010

L. DECLARATION OF REQUIRED CERTIFICATES OF INSTALLATION

Selections made by Documentation Author indicate which Certificates of Installation must be submitted for the features to be recognized for compliance. These documents must be retained and provided to the building inspector during construction and can be found online

Building Component	Form/Title
Envelope	NRCI-ENV-E - Envelope (for all buildings)
Mechanical	NRCI-MCH-E - For all buildings with Mechanical Systems
Plumbing	NRCI-PLB-E - For all buildings with Plumbing Systems

M. DECLARATION OF REQUIRED CERTIFICATES OF ACCEPTANCE

Selections made by Documentation Author indicate which Certificates of Acceptance must be submitted for the features to be recognized for compliance. These documents must be provided to the building inspector during construction. Lighting controls and mechanical NRCAs must be completed through an Acceptance Test Technician Certification Provider (ATTCP).

Building Component[1]	Form/Title & System Name(s)
Envelope	NRCA-ENV-02-F - NRFC label verification for fenestration
Mechanical	NRCA-MCH-02-A - Outdoor Air must be submitted for all newly installed HVAC units. Note: MCH-02-A can be performed in conjunction with MCH-07-A Supply Fan VFD Acceptance (if applicable) since testing activities overlap
	EUH-1 and EUH-2_, DS-1
Mechanical	NRCA-MCH-03-A - Constant Volume Single Zone HVAC
	EUH-1 and EUH-2_, DS-1

N. DECLARATION OF REQUIRED CERTIFICATES OF VERIFICATION

Selections made by Documentation Author indicate which Certificates of Verification must be submitted for the features to be recognized for compliance. These documents must be retained and provided to the building inspector during construction and can be found online

There are no Certificates of Verification applicable to this project

G7A. FENESTRATION ASSEMBLY SUMMARY (NONRESIDENTIAL)

01	02	03	04	05	06	07	08	09
Fenestration Assembly Name	Fenestration Type/ Product Type / Frame Type	Certification Method[1]	Assembly Method	Area (ft^2)	Overall U-factor	Overall SHGC	Overall VT	Status[2]
R-18.3 Metal Door	Vertical fenestration Glazed door N/A	NFRC	Manufactured	1,176	0.06	0.5	0.5	N

[1] Notes: Newly installed fenestration shall have a certified NFRC Label Certificate or use the CEC default tables found in Table 110.6-A and Table 110.6-B. Center of Glass (COG) values are for the glass-only, determined by the manufacturer, and are shown for ease of verification. Site-built fenestration values are calculated per Nonresidential Appendix NA6 and are used in the analysis.

[2] Status: N - New, A - Altered, E - Existing

H1. DRY SYSTEM EQUIPMENT (FURNACES, AIR HANDLING UNITS, HEAT PUMPS, VRF, ECONOMIZERS ETC.)

01	02	03	04	05	06	07	08	09	10	11	12
Equipment Name	Equipment Type	Qty	Heating				Cooling			Economizer Type (if present)	Status[1]
			Total Heating Output (kBtu/h)	Supp Heat Output (kBtu/h)	Efficiency Unit	Efficiency	Total Cooling Output (kBtu/h)	Efficiency Unit	Efficiency		
EUH-1	Single Zone Air Conditioner (SZAC) Air System	1	51.18	0	N/A	Electric Resistance	0	N/A	NA	No Economizer	N
EUH-2	Single Zone Air Conditioner (SZAC) Air System	1	51.18	0	N/A	Electric Resistance	0	N/A	NA	No Economizer	N
DS-1	Single Zone Heat Pump	1	20	0	HSPF2	10.4	18	EER2 SEER2	12 23.8	N/A	N

[1] Status: N - New, A - Altered, E - Existing

C8. ENERGY USE INTENSITY (EUI)

	Standard Design (kBtu/ft^2 / yr)	Proposed Design (kBtu/ft^2 / yr)	Margin (kBtu/ft^2 / yr)	Margin Percentage
GROSS EUI[1]	11	9.8	1.2	10.91
NET EUI[1]	11	9.8	1.2	10.91

[1] Notes: Gross EUI is Energy Use Total (not including PV)/Total Building Area. Net EUI is Energy Use Total (including PV)/Total Building Area.

D1. EXCEPTIONAL CONDITIONS

• The project uses the Simplified Geometry Performance Modeling Approach which is not capable of modeling daylighting controls and assumes the prescriptive Secondary Daylit Control requirements are met. PRESCRIPTIVE COMPLIANCE documentation (form NRCC-LTI-02-E) for the requirements of section 140.6(d) Automatic Daylighting Controls in Secondary Daylit Zones is required.
• The user model includes space(s) that are designed to be served by mechanical cooling systems, but the cooling systems were not included in the simulation model. A cooling system has been modeled for both the proposed and standard cases.
• PV/Battery Building Type has been modified from software defaults for one or more spaces. Review project's PV/Battery Building Type(s) with documentation author. Refer to Energy Code section 140.10 for Nonresidential or 170.2(g) for more information.

E4. ADDITIONAL REMARKS

This table includes remarks made by the permit applicant to the Authority Having Jurisdiction.

WH-1 (AO Smith DVE-120) serving app bay is modeled at 16% of its capacity. Remainder of the percentage is serving the modular building under a separate permit.

Documentation Author's Declaration Statement

1. I certify that this Certificate of Compliance documentation is accurate and complete.

Documentation Author Name: Jorge Bravo	Documentation Author Signature:
Company: EMCOR Services Mesa Energy Systems	Signature Date: 2026-04-16
Address: 1500 Palm St.	CEA/HERS Certification Identification (if applicable):
City/State/Zip: , San Luis Obispo, CA 93401	Phone: 805-540-3363

Responsible Person's Declaration statement

I certify the following under penalty of perjury, under the laws of the State of California:

1. The information provided on this Certificate of Compliance is true and correct.
2. I am eligible under Division 3 of the Business and Professions Code to accept responsibility for the building design or system design identified on this Certificate of Compliance (responsible designer)
3. The energy features and performance specifications, materials, components, and manufactured devices for the building design or system design identified on this Certificate of Compliance conform to the requirements of Title 24, Part 1 and Part 6 of the California Code of Regulations.
4. The building design features or system design features identified on this Certificate of Compliance are consistent with the information provided on other applicable compliance documents, worksheets, calculations, plans and specifications submitted to the enforcement agency for approval with this building permit application.
5. I understand that a registered copy of this Certificate of Compliance shall be made available with the building permit(s) issued for the building, and made available to the enforcement agency for all applicable inspections, and I will take the necessary steps to accomplish this requirement.
6. I understand that a registered copy of this Certificate of Compliance is required to be included with the documentation the builder provides to the building owner at occupancy, and I will take the necessary steps to accomplish these requirements.

Responsible Designer Name: Michael Scott	Responsible Designer Signature:	
Company: RRM Design Group		
Address: 3765 S Higuera St	Date Signed:	
City/State/Zip: San Luis Obispo, CA 93401	License #:	
Phone: 805-543-1794	Title:	Scope:
Responsible Designer Name: Brian Starrett	Responsible Designer Signature:	
Company: 3C Engineering, Inc.		
Address: 1500 Palm St.	Date Signed: 2026-04-16	
City/State/Zip: San Luis Obispo, CA 93401	License #: M 34068	
Phone: 805-540-3363	Title:	Scope:

H3. NONRESIDENTIAL / COMMON USE AREA FAN SYSTEMS SUMMARY

01	02	03	04	05	06	07	08	09	10	11	12	13
Name or Item Tag	Qty	Design OA CFM	Supply Fan				Return / Relief Fan					Status[1]
			CFM	Power	Power Units	Control	Fan Type	CFM	Power	Power Units	Control	
EUH-1	1	0	1,215	0.07	BHP	Constant Vol	N/A	N/A	N/A	N/A	N/A	N
EUH-2	1	0	1,215	0.07	BHP	Constant Vol	N/A	N/A	N/A	N/A	N/A	N
DS-1	1	0	530	0.03	BHP	Constant Vol	N/A	N/A	N/A	N/A	N/A	N

[1] Status: N - New, A - Altered, E - Existing

H5. GENERAL EXHAUST FAN SUMMARY

01	02	03	04	05	06	07	08
System ID	Zone Name	Qty	CFM	Power	Power Units	Continuous Operation?	Status[1]
(APP BAY) General Storage3-EF	1-(APP BAY) General Storage	1	2500	0.4	BHP	No	N
(APP BAY) General Storage37-EF	2-(APP BAY) General Storage	1	2500	0.4	BHP	No	N

[1] Status: N - New, A - Altered, E - Existing

H8. SYSTEM SPECIAL FEATURES

01	02	03	04
System Name	Equipment Type	Interlocks per 140.4(n)[1]	Other Special Features and Controls
WH-11 - SHW	Service Hot Water	N/A	Fixed Temperature Control

Notes: This table includes controls related to the performance path only. For projects using the prescriptive path, mandatory and prescriptive controls requirements are documented on the NRCC-MCH-E.

[1] Yes = interlocks are provided, No = interlocks are not provided, NA means no operable openings.

G1. ENVELOPE GENERAL INFORMATION (conditioned spaces only)

01	02	03	04
Opaque Surfaces & Orientation	Total Gross Surface Area (ft^2)	Total Fenestration Area (ft^2)	Window to Wall Ratio (%)
North-Facing[1]	1350	588	43.56
East-Facing[2]	1578	0	0
South-Facing[3]	1350	588	43.56
West-Facing[4]	1628	0	0
Total	**5906**	**1176**	**19.91**
Roof	5710	0	0

Notes
[1]North-Facing is oriented to within 45 degrees of true north, including 4500'00" east of north (NE), but excluding 4500'00" west of north (NW),
[2]East-Facing is oriented to within 45 degrees of true east, including 4500'00" south of east (SE), but excluding 4500'00" north of east (NE),
[3]South-Facing is oriented to within 45 degrees of true south, including 4500'00" west of south (SW), but excluding 4500'00" east of south (SE),
[4]West-Facing is oriented to within 45 degrees of true west, including 4500'00" north of west (NW), but excluding 4500'00" south of west (SW),

G4. NONRESIDENTIAL AIR BARRIER

01	02
Building Story Name	Air Barrier
Com-Floor 1	No air barrier

H9. NONRESIDENTIAL / COMMON USE AREA & HOTEL/MOTEL VENTILATION

01	02	03	04	05	06	07
Zone Name	Mechanical Ventilation				Conditioned Area (sf)	DCV or Occupant Sensor Controls, or Both
	Ventilation Function	# of People	Supply OA CFM	Exhaust CFM		
1-(APP BAY) General Storage	NA General - Unoccupied	2.88	0	2500	3066	N/A
2-(APP BAY) General Storage	NA	0	0	2500	2490	N/A
3-(EMT) General Storage	NA	0	0	0	154	N/A

H11. ZONAL SYSTEM AND TERMINAL UNIT SUMMARY

01	02	03	04	05	06	07	08	09	10	11	12
System ID	System Type	Qty	Rated Capacity (kBtuh)		Airflow (cfm)			Fan			VSD
			Heating	Cooling	Design	Min.	Min. Ratio	Power	Power Units	Cycles	
1-(APP BAY) General Storage-Trm	Uncontrolled	1	N/A	N/A	1,215	N/A	0	N/A	N/A	N/A	☐
2-(APP BAY) General Storage-Trm	Uncontrolled	1	N/A	N/A	1,215	N/A	0	N/A	N/A	N/A	☐
DS-1	Single Zone Heat Pump	1	20	18	530	N/A	N/A	0.03	BHP	Cycling	☐

I1. WATER HEATER EQUIPMENT SUMMARY

01	02	03	04	05	06	07	08	09	10	11	12	13	14
Name	Heater Element Type	Tank Type	Qty	Tank Vol (gal)	Rated Input	Rated Input Unit	Efficiency	Efficiency Unit	Tank Insulation R-value Int/Ext	Standby Loss Fraction	1st Hr. Rating or Flow Rate (gal)	Heat Pump Type	Tank Location or Ambient Condition
A.O. Smith DVE-1202	Electricity	Storage	1	32	2.88	kW	0.92	UEF	N/A	N/A	0	N/A	N/A

G5. OPAQUE SURFACE ASSEMBLY SUMMARY

01	02	03	04	05	06		07	08	09	10
Surface Name	Construction Type	Area (ft^2)	Framing Type	Cavity R-Value	Continuous R-Value		Units	Value	Description of Assembly Layers	Status[1]
					Interior	Exterior				
Metal Building Roof R29 N9	Roof	5,710	Metal	29	N/A	N/A	U-factor	0.0766	Metal Standing Seam - 1/16 in. Composite-1 Composite-2	N
R13 Ext. Wall12	Exterior Wall	5,906	N/A	13	N/A	N/A	U-factor	0.113	Metal Siding - 1/16 in. Composite-3	N
Interior Wall at Turnout30	Interior Wall	1,050	N/A	0	N/A	N/A	U-factor	0.7353	Metal Siding - 1/16 in. Composite-4	N
Slab On Grade32	Underground Floor	5,710	N/A	0	N/A	N/A	F-factor	0.73	Slab Type =Unheated slab on grade Insulation Orientation =None Insulation R-Value =none	N

[1] Status: N - New, A - Altered, E - Existing

G6A. OPAQUE DOOR SUMMARY (NONRESIDENTIAL)

01	02	03	04
Assembly Name	Area (ft^2)	Overall U-factor	Status[1]
Metal Door22	40	0.7	N

[1] Status: N - New, A - Altered, E - Existing

BY Mesa Energy Systems, Inc., ALL COMMON LAW COPYRIGHT AND OTHER PROPERTY RIGHTS RESERVE THIS DOCUMENT AS AN ORIGINAL AND UNPUBLISHED WORK PRODUCT. THIS WORK SHALL NOT BE DUPLICATED, COPIED, DISCLOSED OR USED IN CONNECTION WITH ANY WORK OR PROJECT OTHER THAN THE SPECIFIC PROJECT FOR WHICH IT HAS BEEN PREPARED, NOR SHALL IT BE ASSIGNED TO ANY THIRD PARTY WITHOUT FIRST OBTAINING THE EXPRESS WRITTEN CONSENT OF VISUAL CONTACT. THIS DOCUMENT SHALL CONSTITUTE CONCLUSIVE EVIDENCE OF ACCEPTANCE OF THESE RESTRICTIONS.

3C Engineering
An EMCOR Company
(805) 540-3363
1500 Palm St, San Luis Obispo, CA, 93401

REGISTERED PROFESSIONAL ENGINEER
BRIAN P. STARRETT
M 34068
EXP. 6/30/26
MECHANICAL
STATE OF CALIFORNIA

ENGINEERING SHEET NO. T24.1

REV.	DESCRIPTION	CK'D	APP	DATE

PUBLIC WORKS DEPARTMENT ENGINEERING DIVISION
CITY OF SAN BUENAVENTURA

FIRE STATION NO. 7 ENERGY COMPLIANCE DOCUMENTATION

DRN. BY: TO | DES. BY: EF | CK'D. BY: DS

PRINCIPAL ENGINEER — 5 May 2026 DATE
CITY ENGINEER — 5/7/2026 DATE

SPEC. NUMBER 2025-010 | PROJECT NUMBER FA11-1061

April 17, 2026 | SHEET 82 OF 151 | DWG. NO. 2025-D-010

CIRCULATION PUMP SCHEDULE

TAG	MAKE	MODEL	MOTOR TYPE	GPM	INLET WATER TEMP °F	ELECTRICAL DATA		OPERATING WEIGHT LBS	REMARKS SEE BELOW	INSTALLATION DETAIL
						POWER V/ϕ/HZ	WATTS			
CP 1	BELL & GOSSETT	e3-6	ECM	6	110	120/1/60	27	10	NA	NA

GENERAL NOTES APPLICABLE TO ALL UNITS:
A. DISCONNECT PROVIDED AND INSTALLED BY ELECTRICAL CONTRACTOR.
B. PROVIDE WITH VARIO MOTOR CONTROL, BRASS HOUSING, ULTRACIRC UNION CONNECTIONS, 6FT ELECTRICAL CORD WITH PLUG, ADJUSTABLE THERMOSTAT AND TIMER.
C. 120 VOLT RECEPTACLE PROVIDED BY ELECTRICAL CONTRACTOR. CONTRACTOR SHALL REVIEW OWNERS MANUAL OF EQUIPMENT PRIOR TO INSTALLATION OF RECEPTACLE FOR PROPER OUTLET RATING.

ELECTRIC STORAGE WATER HEATER SCHEDULE

TAG	MAKE	MODEL	STORAGE GALLONS	DIMENSIONS WIDTH" X HEIGHT"	PIPING CONNECTIONS	SET TEMP °F	INSTALLATION LOCATION	ELECTRICAL DATA		OPERATING WEIGHT LBS	REMARKS SEE BELOW	INSTALLATION DETAIL
								POWER V/ϕ/HZ	WATTS			
WH 1	AO-SMITH	DVE-120	119	35x62-1/4x29-1/2	1-1/4"	120	TURNOUT	208/3/60	18000	1380	1	1/P0.2

NOTES: 1. DISCONNECT PROVIDED BY ELECTRICAL CONTRACTOR.

AIR COMPRESSOR

TAG	MAKE	MODEL	DIMENSIONS	CFM	PSI	ELECTRICAL		TYPE	TANK SIZE (GALLONS)	APPROX SHIPPING WEIGHT (LBS)	REMARKS SEE BELOW	INSTALLATION DETAIL
						POWER V/ϕ/HZ	HP					
AC 1	GARDNER DENVER	VR5-8	35x27x75	21.0	125	208/1/60	5	RECIRC	80	590	1, 2	6/P0.1

NOTES: 1. PROVIDE WITH ACCESSORIES; GARDNER DENVER FILTER #FIL14-13 AND TRI-STAR REGULATOR #R354G.
2. PROVIDE WITH MANUFACTURERS VIBRATION ISOLATION PACKAGE.
3. PROVIDE WITHOUT AUTO-DRAIN VALVE.

PLUMBING FIXTURE SCHEDULE

TAG	FIXTURE	ACCESSIBLE	MANUFACTURER	MODEL	BRANCH PIPE SIZE				ELECTRICAL V/ϕ/HZ	INSTALL DETAILS	REMARKS
					W	V	CW	HW			
FD-1	FLOOR DRAIN ROUND STRAINER	N/A	JR SMITH	2005Y	2"	1-1/2"	1/2"	NA	NA	4/P0.1	5"Ø, HEEL PROOF NICKEL BRONZE STRAINER WITH VANDAL PROOF SCREWS, CAST IRON BODY. PROVIDE "P" TRAP WITH TRAP PRIMER CONNECTION.
FS-1	FLOOR SINK HALF GATE	N/A	JR SMITH	3450	2"	1-1/2"	1/2"	NA	NA	4/P0.1	ENAMELED CAST IRON, HALF GRATE. PROVIDE "P" TRAP WITH TRAP PRIMER CONNECTION.
HB-1	HOSE BIBB WALL MOUNT	N/A	WOODFORD	24	NA	NA	3/4"	NA	NA	-	CHROME FINISH, PROVIDE WITH LOOSE TEE KEY.
S-1	SINK CLEAN UP	N/A	WICKETTS - BOWL	WCS-4124	2"	1-1/2"	1/2"	1/2"	BATTERY	-	24x24x14 BOWL, 8" BACK SPLASH, 316 SS CONSTRUCTION. PROVIDE WITH SINGLE FAUCET HOLE CENTERED OVER THE SINK BASIN. 8" GOOSENECK BATTERY OPERATED SENSOR FAUCET W/ HYDROELECTRIC GENERATOR. 1.5 GPM LAMINAR FLOW AERATOR, CHROME PLATED FINISH, PROVIDE WITH MANUFACTURERS THERMOSTATIC MIXING VALVE. DRAIN ASSEMBLY WITH 2" LEVER HANDLE DRAIN, SS FLANGE WITH BRASS BODY, STAINLESS STEEL FLAT GRID STAINER, 2"CP TRAP.
			ZURN - FAUCET	Z6922-XL							
			ELKAY - DRAIN	LK25RT							
TD-1	TRENCH DRAIN PRE-SLOPED	N/A	WATTS	DEAD LEVEL D	4"	3"	NA	NA	NA	-	WATTS DEAD LEVEL D PRE-SLOPED TRENCH DRAIN SYSTEM WITH DUCTILE IRON FRAME, UV STABILIZED GLASS-FILLED POLYPROPYLENE CHANNELS WITH INTEGRAL 4" NO HUB BOTTOM OUTLETS, AND DUCTILE IRON GRATING TO SUIT DIN CLASS "D" LOAD RATING. SYSTEM SHALL BE FRAME-ANCHORED, AND INCLUDE ENDCAPS, FRAME CONNECTORS, GRATE LOCKDOWNS, AND CONSTRUCTION COVERS. ADDITIONAL SYSTEM INSTALLATION SHALL BE PERFORMED IN ACCORDANCE WITH MANUFACTURER'S RECOMMENDATIONS.

GENERAL NOTES APPLICABLE TO ALL FIXTURES:
A. BRANCH PIPE SIZES TO INDIVIDUAL FIXTURES SHALL BE AS SCHEDULED UNLESS OTHERWISE SPECIFIED.
B. FIXTURES SCHEDULED AS ACCESSIBLE SHALL BE INSTALLED PER ACCESSIBLE FACILITIES REQUIREMENTS. REFER TO ARCHITECTURAL DRAWINGS.
C. UNLESS OTHERWISE NOTED, COORDINATE SINK FAUCET MOUNTING HOLES WITH THE SPECIFIED FAUCET. FAUCETS SHALL BE CENTERED OVER THE BOWL. SINKS SHALL NOT BE PROVIDED WITH SPARE MOUNTING HOLES THAT ARE NOT COVERED BY THE FAUCET.

PLUMBING GENERAL NOTES

1 COMPLY WITH THE REQUIREMENTS OF THE FOLLOWING CODES:

2022 CALIFORNIA ADMINISTRATIVE CODE (CAC): PART 1, TITLE 24, CALIFORNIA CODE OF REGULATIONS (CCR)
2022 CALIFORNIA BUILDING CODE (CBC): PART 2, TITLE 24 CCR
2022 CALIFORNIA ELECTRICAL CODE (CEC): PART 3, TITLE 24 CCR
2022 CALIFORNIA MECHANICAL CODE (CMC): PART 4, TITLE 24 CCR
2022 CALIFORNIA PLUMBING CODE (CPC): PART 5, TITLE 24 CCR
2022 CALIFORNIA ENERGY CODE (CENC): PART 6, TITLE 24 CCR
2022 CALIFORNIA FIRE CODE (CFC): PART 9, TITLE 24 CCR
2022 CALIFORNIA GREEN BUILDING STANDARDS CODE (CAL GREEN): PART 11, TITLE 24 CCR

REPORT DEFICIENCIES WITHIN THIRTY (30) DAYS UPON AUTHORIZATION TO PROCEED.

2 NO PLUMBING SHALL BE INSTALLED UNTIL ALL REQUIRED PLUMBING PLAN CHECK PERMITS AND APPROVALS HAVE BEEN OBTAINED FROM ALL REQUIRED AGENCIES.
3 LAVATORY FAUCETS, SINK FAUCETS (NOT INCLUDING SERVICE SINK FAUCETS OR FAUCETS DESIGNATED AS INSTITUTIONAL) SHALL MEET THE FLOW REQUIREMENTS OUTLINED IN THE APPLIANCE EFFICIENCY STANDARDS.
4 COORDINATE WITH THE ARCHITECTURAL DRAWINGS FOR EXACT LOCATION OF PLUMBING FIXTURES AND DRAINS.
5 PROVIDE ALL TAILPIECES, TRAPS, STOPS, AND SUPPLY PIPES TO LAVATORIES DESIGNED AS ACCESSIBLE, WITH PREFORMED INSULATION JACKET.
6 COORDINATE AND SCHEDULE TIMING FOR ALL UTILITY SERVICE CONNECTIONS.
7 ALL LINES BELOW SLAB ON GRADE TO BE LOCATED AWAY FROM ALL LOAD BEARING FOOTINGS.
8 ALL VENTS THRU ROOF SHALL BE MINIMUM OF 36 INCHES ABOVE ANY MECHANICAL VENTILATION AIR INTAKE WITHIN 10 FEET. PROVIDE VANDAL PROOF HOODS ON ALL VENTS THROUGH ROOF.
9 CONTRACTOR SHALL BE RESPONSIBLE FOR ALL CUTTING AND PATCHING OF WALLS, ROOFS, FOOTINGS, FLOORS, INCLUDING ALL SAW CUTTING AND CORE DRILLING. COORDINATE ALL SAW CUTTING AND CORE DRILLING WITH STRUCTURAL DRAWINGS. ANY CUTTING AND DRILLING REQUIRED OF STRUCTURAL ELEMENTS THAT IS NOT SPECIFICALLY SHOWN ON THE PLANS SHALL BE BROUGHT TO THE ARCHITECTS ATTENTION PRIOR TO CUTTING AND DRILLING. CONTRACTOR SHALL SUBMIT PROPOSED LOCATION AND SIZES OF SUCH CUTTING AND DRILLING FOR THE ARCHITECTS AND STRUCTURAL ENGINEERS APPROVAL.
10 COORDINATE ALL EQUIPMENT LOCATIONS, PIPE PENETRATIONS AND EQUIPMENT PAD LOCATIONS WITH STRUCTURAL DRAWING PRIOR TO WORK.
11 COORDINATE INSTALLATION OF ALL EQUIPMENT AND PIPING WITH OTHER TRADES PRIOR TO INSTALLATION. ENSURE THAT ALL CONTROL DEVICES, SHUT-OFF VALVES, ETC. ARE ACCESSIBLE FOR MAINTENANCE. WHERE ACCESS PANELS IN FINISHED SPACES, OTHER THAN THAT SHOWN, CONTRACTOR SHALL PROVIDE AND COORDINATE EXACT LOCATION OF PANELS WITH ARCHITECT PRIOR TO INSTALLATION.
12 ANY STRUCTURAL FIREPROOFING DAMAGED DURING INSTALLATION OF PLUMBING EQUIPMENT, PIPING, ETC. SHALL BE REPAIRED AT NO COST TO THE OWNER. REPAIRS SHALL BE AS DIRECTED BY THE ARCHITECT.
13 ALL PIPING PASSING THROUGH CONCRETE/MASONRY WALLS AND FLOORS ARE TO BE SLEEVED.
14 NEW OR REPAIRED POTABLE WATER SYSTEMS SHALL BE DISINFECTED PRIOR TO USE PER 2022 CPC 609.10. THE METHOD TO BE FOLLOWED SHALL BE THAT PRESCRIBED BY THE HEALTH AUTHORITY OR, IN CASE NO METHOD IS PRESCRIBED BY IT, THE FOLLOWING:
A) THE PIPE SYSTEM SHALL BE FLUSHED WITH CLEAN, POTABLE WATER UNTIL POTABLE WATER APPEARS AT THE POINTS OF OUTLET.
B) THE SYSTEM OR PARTS THEREOF SHALL BE FILLED WITH A WATER-CHLORINE SOLUTION CONTAINING NOT LESS THAN 50 PARTS PER MILLION OF CHLORINE, AND THE SYSTEM OR PART THEREOF SHALL BE VALVED-OFF AND ALLOWED TO STAND FOR 24 HOURS; OR, THE SYSTEM OF PART THEREOF SHALL BE FILLED WITH A WATER-CHLORINE SOLUTION CONTAINING NOT LESS THAN 200 PARTS PER MILLION OF CHLORINE AND ALLOWED TO STAND FOR 3 HOURS.
C) FOLLOWING THE ALLOWED STANDING TIME, THE SYSTEM SHALL BE FLUSHED WITH CLEAN, POTABLE WATER UNTIL THE CHLORINE RESIDUAL IN THE WATER COMING FROM THE SYSTEM DOES NOT EXCEED THE CHLORINE RESIDUAL IN THE FLUSHING WATER.
D) THE PROCEDURE SHALL BE REPEATED WHERE IT IS SHOWN BY BACTERIOLOGICAL EXAMINATION MADE BY AN APPROVED AGENCY THAT CONTAMINATION PERSISTS IN THE SYSTEM.

PLUMBING CAL GREEN NOTES

SINK FAUCETS: 1.5 GPM MAX.

PROJECT TEAM LIST

TITLE	NAME	DESK NUMBER	EMAIL ADDRESS
PRINCIPAL IN CHARGE	BRIAN STARRETT	805.634.6159	BSTARRETT@EMCOR.NET
PROJECT MANAGER	DENVER STANGER	805.634.8711	DSTANGER@EMCOR.NET
MECHANICAL DESIGNER	DREW SCHMIDT	805.634.8753	DSCHMIDT@EMCOR.NET
PLUMBING DESIGNER	ELI FERMAN	805.634.8818	EFERMAN@EMCOR.NET

PIPING PRODUCTS & GENERAL REQUIREMENTS

DOMESTIC HOT WATER PIPING SHALL BE INSULATED PER CPC 609.21. HOT WATER PIPE INSULATION SHALL HAVE A MINIMUM WALL THICKNESS OF NOT LESS THAN THE DIAMETER OF THE PIPE FOR A PIPE UP TO 2 INCHES (50 MM) IN DIAMETER. INSULATION WALL THICKNESS SHALL BE NOT LESS THAN 2 INCHES (51 MM) FOR A PIPE OF 2 INCHES (50 MM) OR MORE IN DIAMETER.

PIPING, FIXTURES, APPLIANCES, AND APPURTENANCES SHALL BE SUPPORTED IN ACCORDANCE WITH CPC 2022, THE MANUFACTURER'S INSTALLATION INSTRUCTIONS, AND IN ACCORDANCE WITH THE AUTHORITY HAVING JURISDICTION. SUSPENDED PIPING SHALL BE SUP-PORTED AT INTERVALS NOT TO EXCEED THOSE SHOWN IN CPC TABLE 313.3. HANGER ROD SIZES SHALL BE NOT SMALLER THAN THOSE SHOWN IN CPC TABLE 313.6.

WATER PIPE SIZING CRITERIA CALCULATION

ELEMENT	PRESSURE (PSI)	PRESSURE (FT H2O)
STATIC PRESSURE IN MAIN	85.0	196.1
LOSS THROUGH METER	0.7	1.6
LOSS THROUGH BACKFLOW PREVENTER	12.0	27.7
PRESSURE LOSS THROUGH PRV	0.0	0.0
OTHER DOWNSTREAM PRESSURE LOSSES	0.0	0.0
PRESSURE LOSS THROUGH ELEVATION HEAD (@0.434 PSI PER FOOT H2O) (IF LOSS IS NEGATIVE, THIS INDICATES FINAL FIXTURE IS LOWER THAN THE MAIN LINE AND THERE IS A GAIN IN PRESSURE)	4.3	10.0
PRESSURE REQUIRED AT FINAL FIXTURE	30.0	69.2
REMAINING PRESSURE FOR FRICTION LOSSES	38.0	87.6
NOMINAL DISTANCE BETWEEN MAIN AND FINAL FIXTURE (FT)	150.0	
TOTAL DEVELOPED LENGTH BETWEEN MAIN AND FINAL FIXTURE (FT) (ACCOUNTING FOR MINOR LOSSES WITH NOMINAL DISTANCE X 1.4)	210.0	
PRESSURE SIZING CRITERIA (PSI LOSS / 100'-0" OF PIPING)	8.0	
PRESSURE SIZING CRITERIA (FT H2O LOSS / 100'-0" OF PIPING)	18.4	
CW VELOCITY SIZING CRITERIA (FT/S)	8.0	
HW VELOCITY SIZING CRITERIA (FT/S)	5.0	
ASSUMED GPM FROM FIXTURE UNIT COUNT	5.5	

DOMESTIC WATER PIPING IS SIZED BASED ON PRESSURE LOSS IN PSI PER 100 FEET OF PIPING. IF THE ALLOWABLE PRESSURE LOSS STATED ABOVE IS GREATER THAN 8 PSI PER 100 FEET OF PIPE, SIZING SHALL BE BASED ON A PRESSURE LOSS OF 8 PSI PER 100 FEET OF PIPE WITH A MAXIMUM VELOCITY OF 8 FEET PER SECOND FOR COLD WATER AND 5 FEET PER SECOND FOR HOT WATER.

WATER & SEWER SIZING TABLE

PIPING SIZED PER 2022 CPC

DOMESTIC WATER SERVICE

TOTAL WATER SUPPLY FIXTURE UNITS			FT/FV	GPM	PIPE SIZE (INCHES)	METER SIZE (INCHES)	INCOMING PSI	REGULATED PSI	PSI/100'
6.5			FLUSH TANK	5.5	0.75	3/4	85	NOT REGULATED	8
MAXIMUM FIXTURE UNITS ALLOWED	PIPE SIZE (INCHES)	1/2	3/4	1	1-1/4	1-1/2	2	2-1/2	3
	FLUSH VALVES (8 FPS MAX.)	0	0	0	12	35	132	329	666
	FLUSH TANK (8 FPS MAX.)	3	10	23	51	103	254	455	719
	HOT WATER (5 FPS MAX.)	3	8	16	28	46	119	245	406

SEWER LINE

TOTAL DRAINAGE FIXTURE UNITS	PIPE SIZE REQUIRED (INCHES)	PIPE SIZE PROVIDED (INCHES)	BUILDING DRAIN SLOPE	BUILDING SEWER SLOPE
11	3	4	2%	SEE CIVIL

PLUMBING LEGEND

SYMBOL	ABBREVIATION	DESCRIPTION
	AAV	AUTOMATIC AIR VENT
		BALL VALVE
	BFV	BUTTERFLY VALVE
		CAP
		CHECKVALVE
	COTG	CLEAN OUT TO GRADE
Ø	DIA	DIAMETER
ϕ		ELECTRICAL PHASE
	FCO	FLOOR CLEAN OUT
	HB	HOSE BIBB
		RECESSED HOSE BIBB
		SHUT OFF VALVE IN PIPE DROP OR PIPE RISER
	TPV	TRAP PRIMER VALVE
		PIPE DOWN
		PIPE UP
		PIPE TEE DOWN
		PIPE INTERSECTION
		PLUG VALVE ELEVATION VIEW
	PV	PLUG VALVE PLAN VIEW
		REDUCED PRESSURE BACK FLOW PREVENTOR
WCO	WCO	WALL CLEANOUT
	CO	CLEANOUT
	WHA	WATER HAMMER ARRESTOR
A	A	COMPRESSED AIR
	CW	COLD WATER
CD	CD	CONDENSATE DRAIN
	HW	HOT WATER
	V	SANITARY VENT
TP TP	TP	TRAP PRIMER WATER SUPPLY
	S/W	WASTE (BELOW GRADE)
22x30 MIN AP	AP	ACCESS PANEL. SIZE GIVEN INDICATES MINIMUM SIZE REQUIRED

PLUMBING ABBREVIATIONS

ABV	ABOVE	GPF	GALLONS PER FLUSH
ADA	AMERICANS WITH DISABILITIES ACT	GPM	GALLONS PER MINUTE
AFF	ABOVE FINISHED FLOOR	GW	GREASE WASTE
AG	ABOVE GRADE	HP	HORSE POWER
AHJ	AUTHORITY HAVING JURISDICTION	HW	HOT WATER
ALUM	ALUMINUM	IE	INVERT ELEVATION
AMP	AMPERAGE	IN/H	INCHES PER HOUR
AP	ACCESS PANEL	IWC	INCHES OF WATER COLUMN
ARCH	ARCHITECT, ARCHITECTURAL	KW	KILOWATTS
BEL	BELOW	LAV	LAVATORY
BF	BELOW FLOOR	LBS	POUNDS
BG	BELOW GRADE	MAX	MAXIMUM
BFP	BACKFLOW PREVENTOR	MBH	1000 BRITISH THERMAL UNITS PER HOUR
BLDG	BUILDING	MCA	MINIMUM CIRCUIT AMPS
BOD	BASIS OF DESIGN	MECH	MECHANICAL
BTUH	BRITISH THERMAL UNIT PER HOUR	MFGR	MANUFACTURE OR MANUFACTURER
CA	COMBUSTION AIR	MIN	MINIMUM
CD	CONDENSATE DRAIN	(N)	NEW
CFH	CUBIC FEET PER HOUR	NPS	NOMINAL PIPE SIZE
CI	CAST IRON	NTS	NOT TO SCALE
CONN	CONNECTION	PH	PHASE
CONT	CONTINUATION	PSI	POUNDS PER SQUARE INCH
CP	CHROME PLATED	PW	PROCESS WASTE
CPC	CALIFORNIA PLUMBING CODE	RM	ROOM
COTG	CLEAN OUT THROUGH GRADE	RPM	REVOLUTIONS PER MINUTE
CW	COLD WATER	SDL	STORM DRAIN LEADER
DFU	DRAINAGE FIXTURE UNITS	SDO	STORM DRAIN OVERFLOW
DN	DOWN	SOV	SHUT OFF VALVE
DSA	DIVISION OF THE STATE ARCHITECT	SS	STAINLESS STEEL
(E)	EXISTING	TEMP	TEMPORARY, TEMPERATURE
EC	EVAPORATIVE COOLER	TYP	TYPICAL
EFF	EFFICIENCY	UON	UNLESS OTHERWISE NOTED
ELEC	ELECTRICAL	UTR	UP TO OR UP THROUGH ROOF
EQPT	EQUIPMENT	V	VENT
FCO	FLOOR CLEAN OUT	VAC	VACUUM
FFE	FINISH FLOOR ELEVATION	VTR	VENT THROUGH ROOF
FLA	FULL LOAD AMPS	W	WASTE
FLR	FLOOR	WC	WATER CLOSET
FPS	FEET PER SECOND	WCO	WALL CLEAN OUT
FR	FROM	WHA	WATER HAMMER ARRESTOR
FT	FLUSH TANK	WSFU	WATER SUPPLY FIXTURE UNIT
FV	FLUSH VALVE	WT	WEIGHT EXPRESSED IN POUNDS
GA	GAGE OR GAUGE	W/	WITH
GPC	GALLONS PER CYCLE	W/O	WITHOUT

BY Mesa Energy Systems, Inc., ALL COMMON LAW COPYRIGHT AND OTHER PROPERTY RIGHTS RESERVE THIS DOCUMENT AS AN ORIGINAL AND UNPUBLISHED WORK PRODUCT. THIS WORK SHALL NOT BE DUPLICATED, COPIED, DISCLOSED OR USED IN CONNECTION WITH ANY WORK OR PROJECT OTHER THAN THE SPECIFIC PROJECT FOR WHICH IT HAS BEEN PREPARED, NOR SHALL IT BE ASSIGNED TO ANY THIRD PARTY WITHOUT FIRST OBTAINING THE EXPRESS WRITTEN CONSENT OF VISUAL CONTACT. THIS DOCUMENT SHALL CONSTITUTE CONCLUSIVE EVIDENCE OF ACCEPTANCE OF THESE RESTRICTIONS.

3C Engineering
An EMCOR Company
(805) 540 3363
1500 Fulton St, San Luis Obispo, CA, 93401

REGISTERED PROFESSIONAL ENGINEER
BRIAN P. STARRETT
M 34068
EXP. 6/30/26
MECHANICAL
STATE OF CALIFORNIA

ENGINEERING SHEET NO. P0.0

REV.	DESCRIPTION	CK'D	APP	DATE

PUBLIC WORKS DEPARTMENT ENGINEERING DIVISION
CITY OF SAN BUENAVENTURA

FIRE STATION NO. 7
PLUMBING GENERAL & SCHEDULES

DRN. BY: TO | DES. BY: EF | CK'D. BY: DS

PRINCIPAL ENGINEER — DATE: 5 May 2026
CITY ENGINEER — DATE: 5/7/2026

SPEC. NUMBER 2025-010 | PROJECT NUMBER FA11-1061

April 17, 2026 | SHEET 83 OF 151 | DWG. NO. 2025-D-010

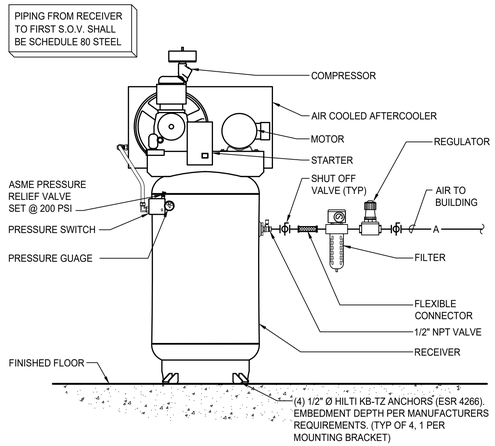

6 AIR COMPRESSOR
NTS

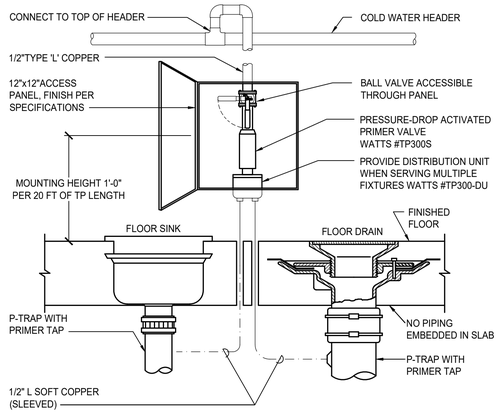

4 TRAP PRIMER
NTS

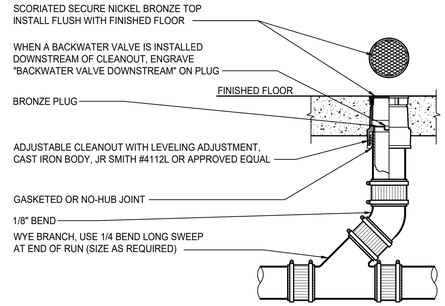

CLEANOUTS IN PIPING 2" OR LESS SHALL HAVE A CLEARANCE OF NOT LESS THAN 18" X 18" IN FRONT OF THE CLEANOUT, CLEANOUTS IN PIPING LARGER THAN 2" INCHES SHALL HAVE A CLEARANCE OF NOT LESS THAN 24" X 24".

CLEANOUTS: CPC TABLE 707.1

PIPE SIZE	CLEANOUT SIZE	THREADS (PER INCH)
1-1/2" - 2"	1-1/2"	11-1/2
2-1/2" - 3"	2-1/2"	8
4" & LARGER	3-1/2"	8

2 FLOOR CLEANOUT
NTS

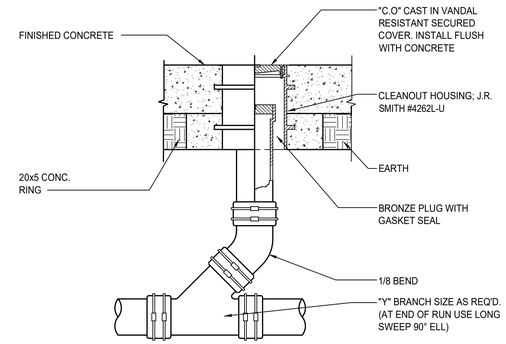

FINISHED CONCRETE AREAS

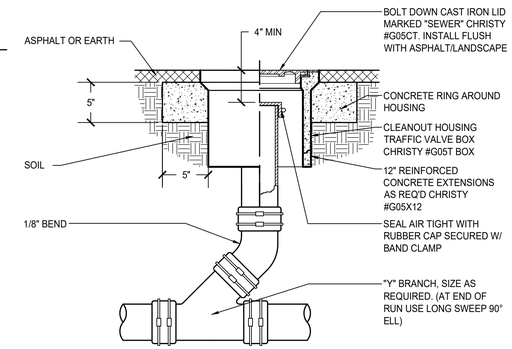

ASPHALT & LANDSCAPED AREAS

CLEANOUTS IN PIPING 2" OR LESS SHALL HAVE A CLEARANCE OF NOT LESS THAN 18" X 18" IN FRONT OF THE CLEANOUT, CLEANOUTS IN PIPING LARGER THAN 2" INCHES SHALL HAVE A CLEARANCE OF NOT LESS THAN 24" X 24".

CLEANOUTS: CPC TABLE 707.1

PIPE SIZE	CLEANOUT SIZE	THREADS (PER INCH)
1-1/2" - 2"	1-1/2"	11-1/2
2-1/2" - 3"	2-1/2"	8
4" & LARGER	3-1/2"	8

1 CLEANOUT TO GRADE
NTS

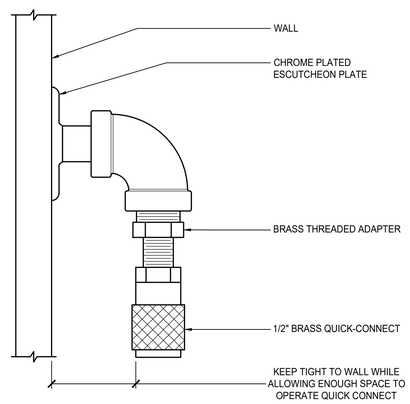

7 COMPRESSED AIR QUICK CONNECT
NTS

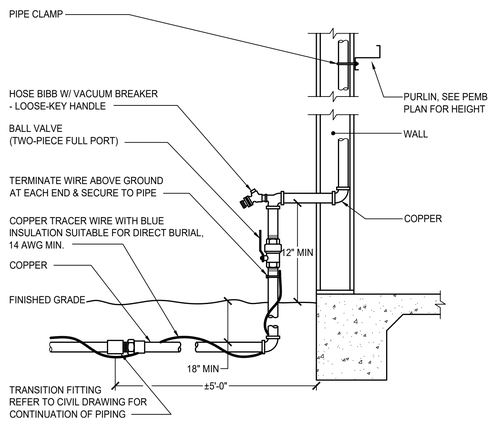

5 BUILDING WATER SUPPLY
NTS

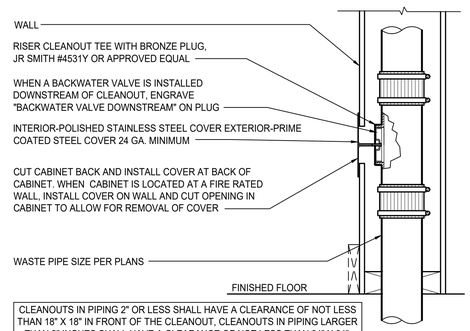

CLEANOUTS IN PIPING 2" OR LESS SHALL HAVE A CLEARANCE OF NOT LESS THAN 18" X 18" IN FRONT OF THE CLEANOUT, CLEANOUTS IN PIPING LARGER THAN 2" INCHES SHALL HAVE A CLEARANCE OF NOT LESS THAN 24" X 24".

CLEANOUTS: CPC TABLE 707.1

PIPE SIZE	CLEANOUT SIZE	THREADS (PER INCH)
1-1/2" - 2"	1-1/2"	11-1/2
2-1/2" - 3"	2-1/2"	8
4" & LARGER	3-1/2"	8

3 WALL CLEANOUT
NTS

BY Mesa Energy Systems, Inc., ALL COMMON LAW COPYRIGHT AND OTHER PROPERTY RIGHTS RESERVE THIS DOCUMENT AS AN ORIGINAL AND UNPUBLISHED WORK PRODUCT. THIS WORK SHALL NOT BE DUPLICATED, COPIED, DISCLOSED OR USED IN CONNECTION WITH ANY WORK OR PROJECT OTHER THAN THE SPECIFIC PROJECT FOR WHICH IT HAS BEEN PREPARED, NOR SHALL IT BE ASSIGNED TO ANY THIRD PARTY WITHOUT FIRST OBTAINING THE EXPRESS WRITTEN CONSENT OF VISUAL CONTACT. THIS DOCUMENT SHALL CONSTITUTE CONCLUSIVE EVIDENCE OF ACCEPTANCE OF THESE RESTRICTIONS.

3C Engineering
An EMCOR Company
(805) 540 3363
1500 Fulton St, San Luis Obispo, CA, 93401

REGISTERED PROFESSIONAL ENGINEER
BRIAN P. STARBECK
M 34068
EXP. 6/30/26
MECHANICAL
STATE OF CALIFORNIA

ENGINEERING SHEET NO. P0.1

REV.	DESCRIPTION	CK'D	APP	DATE

PUBLIC WORKS DEPARTMENT ENGINEERING DIVISION
CITY OF SAN BUENAVENTURA

FIRE STATION NO. 7
PLUMBING DETAILS

DRN. BY: TO | DES. BY: EF | CK'D. BY: DS

PRINCIPAL ENGINEER — 5 May 2026 DATE

CITY ENGINEER — 5/7/2026 DATE

SPEC. NUMBER 2025-010 | PROJECT NUMBER FA11-1061

April 17, 2026 | SHEET 84 OF151 | DWG. NO. 2025-D-010

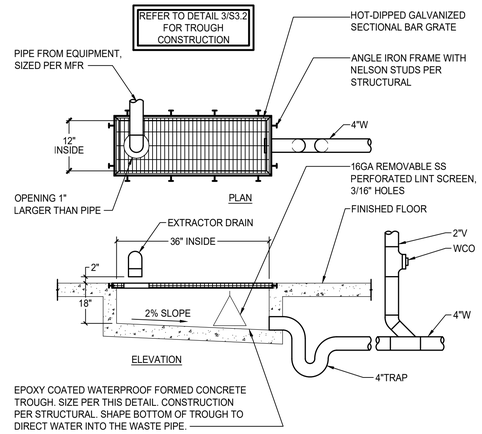

4 TROUGH DRAIN
FOR REAR DISCHARGE WASHER/EXTRACTOR

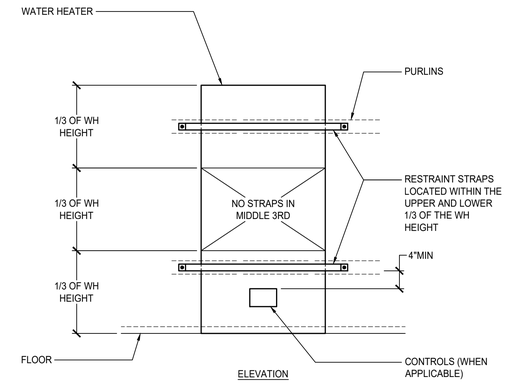

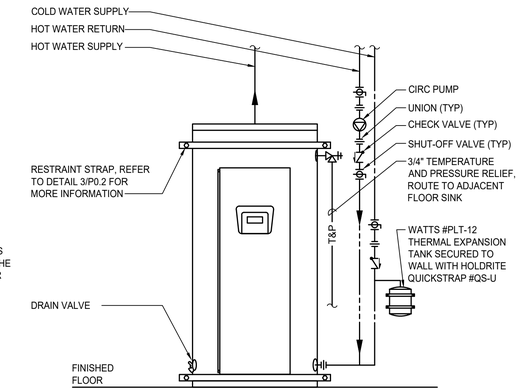

NOTES:
1. COORDINATE ALL ELECTRICAL CONNECTIONS AND POWER REQUIREMENTS WITH ELECTRICAL CONTRACTOR.

1 HEATPUMP WATER HEATER DETAIL
NTS

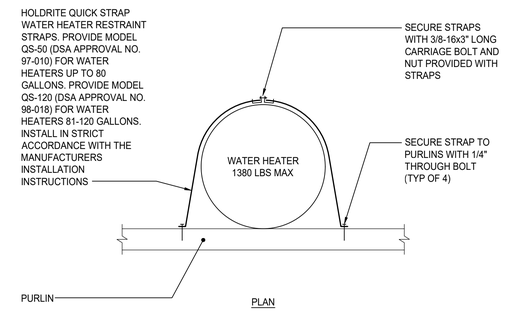

3 TANK TYPE WH RESTRAINT
NTS

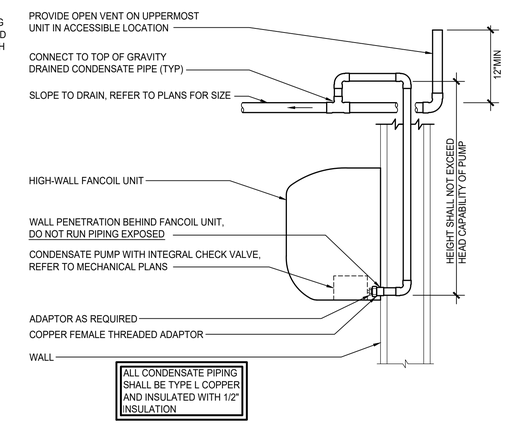

2 HIGH-WALL FANCOIL CONDENSATE DRAIN
NTS

REV.	DESCRIPTION	CK'D	APP	DATE

PUBLIC WORKS DEPARTMENT ENGINEERING DIVISION
CITY OF SAN BUENAVENTURA

FIRE STATION NO. 7 PLUMBING DETAILS

DRN. BY: TO | DES. BY: EF | CK'D. BY: DS

PRINCIPAL ENGINEER — DATE: 5 May 2026

CITY ENGINEER — DATE: 5/7/2026

SPEC. NUMBER 2025-010 | PROJECT NUMBER FA11-1061

April 17, 2026 | SHEET 85 OF 151 | DWG. NO. 2025-D-010

ENGINEERING SHEET NO. P0.2

REGISTERED PROFESSIONAL ENGINEER — BRIAN P. STARKEY — M 34068 — EXP. 6/30/26 — MECHANICAL — STATE OF CALIFORNIA

3C Engineering
An ENCOR Company
(805) 548-3300
1500 Fulton St, San Luis Obispo, CA, 93401

BY Mesa Energy Systems, Inc., ALL COMMON LAW COPYRIGHT AND OTHER PROPERTY RIGHTS RESERVE THIS DOCUMENT AS AN ORIGINAL AND UNPUBLISHED WORK PRODUCT. THIS WORK SHALL NOT BE DUPLICATED, COPIED, DISCLOSED OR USED IN CONNECTION WITH ANY WORK OR PROJECT OTHER THAN THE SPECIFIC PROJECT FOR WHICH IT HAS BEEN PREPARED, NOR SHALL IT BE ASSIGNED TO ANY THIRD PARTY WITHOUT FIRST OBTAINING THE EXPRESS WRITTEN CONSENT OF VISUAL CONTACT. THIS DOCUMENT SHALL CONSTITUTE CONCLUSIVE EVIDENCE OF ACCEPTANCE OF THESE RESTRICTIONS.

KEY NOTES

APPLICABLE TO THIS SHEET ONLY	
1	REFER TO CIVIL PLANS FOR CONTINUATION.
2	CONDENSATE CONNECTION TO MECHANICAL EQUIPMENT. SEE DETAIL 2/P0.2 FOR MORE INFORMATION.
3	CONDENSATE DOWN IN WALL. TERMINATE TO FLOOR SINK.
4	CONNECT VENT PIPING MINIMUM 6" ABOVE FINISHED FLOOR.

PLUMBING GENERAL NOTES

APPLICABLE TO THIS SHEET ONLY	
1	SEE PLUMBING FIXTURE SCHEDULE FOR BRANCH PIPE SIZING.
2	PROVIDE ANGLE STOPS FOR ALL PLUMBING FIXTURE BRANCH PIPING LINES.
3	SLOPE SANITARY WASTE PIPING MIN 2% IN DIRECTION OF FLOW UNLESS OTHERWISE NOTED.
4	SLOPE VENT PIPING UP TOWARDS VTR MIN 1%.
5	SLOPE CONDENSATE PIPING MIN 1% IN DIRECTION OF FLOW.
6	ALL ROOMS WITH FLOOR DRAINAGE MUST HAVE FLOORS SLOPED TOWARD DRAIN. SEE ARCHITECTURAL PLANS FOR REQUIRED SLOPE.
7	PROVIDE CLEANOUTS IN ALL LOCATIONS SHOWN. COORDINATE ALL WALL CLEANOUTS WITH PLUMBING FIXTURES, CASEWORK, AND ARCHITECTURAL ELEVATIONS. SEE DETAIL 3/P0.1 FOR SIZING AND CLEARANCES REQUIRED.
8	REFER TO ARCHITECTURAL PLANS FOR THE LOCATION OF ALL FIXTURES, INCLUDING BUT NOT LIMITED TO FLOOR SINKS, FLOOR DRAINS, TRENCH DRAINS AND ROOF DRAINS. THE ARCHITECTURAL PLANS SHALL TAKE PRECEDENCE.
9	REFER TO MECHANICAL PLANS FOR LOCATIONS OF MECHANICAL EQUIPMENT AND DUCTWORK. COORDINATE ALL WORK TO FIT IN AVAILABLE SPACE.
10	COORDINATE PIPE ROUTING WITH LOCATION OF ELECTRICAL AND DATA PANELS. PIPING SHALL NOT BE ROUTED ABOVE THE PANELS.

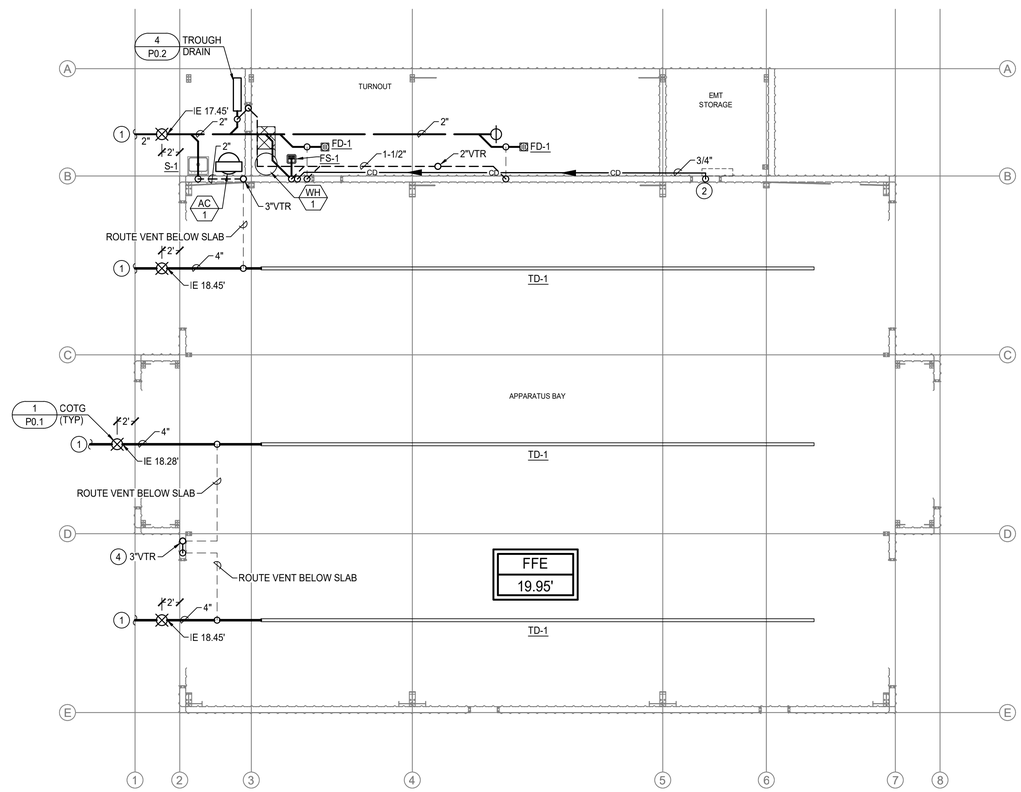

FLOOR PLAN - WASTE & VENT

SCALE: 1/8" = 1'-0"

REV.	DESCRIPTION	CK'D	APP	DATE

PUBLIC WORKS DEPARTMENT ENGINEERING DIVISION

CITY OF SAN BUENAVENTURA

FIRE STATION NO. 7
FLOOR PLAN -
WASTE AND VENT

DRN. BY: TO | DES. BY: EF | CK'D. BY: DS

PRINCIPAL ENGINEER — DATE: 5 May 2026

CITY ENGINEER — DATE: 5/7/2026

SPEC. NUMBER 2025-010 | PROJECT NUMBER FA11-1061

April 17, 2026 | SHEET 86 OF 151 | DWG. NO. 2025-D-010

ENGINEERING SHEET NO. P2.0

REGISTERED PROFESSIONAL ENGINEER — BRIAN P. STARKEY — M 34068 — EXP. 6/30/26 — MECHANICAL — STATE OF CALIFORNIA

3C Engineering
An EMCOR Company
(805) 540 3363
1500 Fulton St, San Luis Obispo, CA, 93401

BY Mesa Energy Systems, Inc.; ALL COMMON LAW COPYRIGHT AND OTHER PROPERTY RIGHTS RESERVE THIS DOCUMENT AS AN ORIGINAL AND UNPUBLISHED WORK PRODUCT. THIS WORK SHALL NOT BE DUPLICATED, COPIED, DISCLOSED OR USED IN CONNECTION WITH ANY WORK OR PROJECT OTHER THAN THE SPECIFIC PROJECT FOR WHICH IT HAS BEEN PREPARED, NOR SHALL IT BE ASSIGNED TO ANY THIRD PARTY WITHOUT FIRST OBTAINING THE EXPRESS WRITTEN CONSENT OF VISUAL CONTACT. THIS DOCUMENT SHALL CONSTITUTE CONCLUSIVE EVIDENCE OF ACCEPTANCE OF THESE RESTRICTIONS.

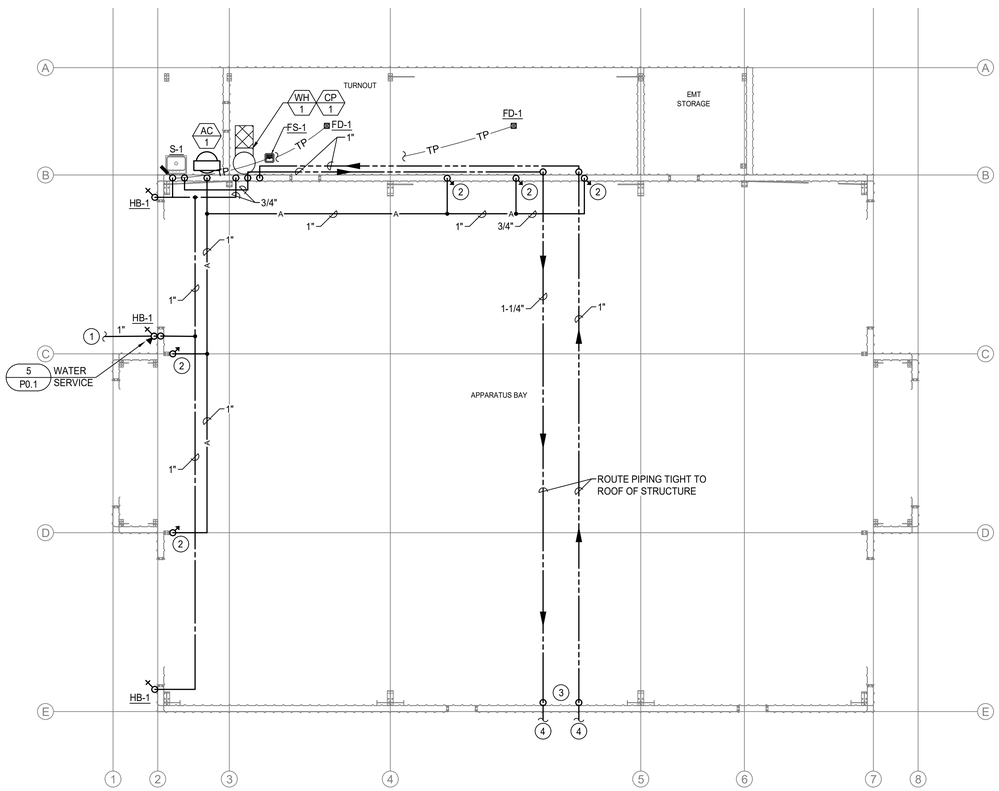

1 FLOOR PLAN - WATER & AIR

SCALE: 1/8" = 1'-0"

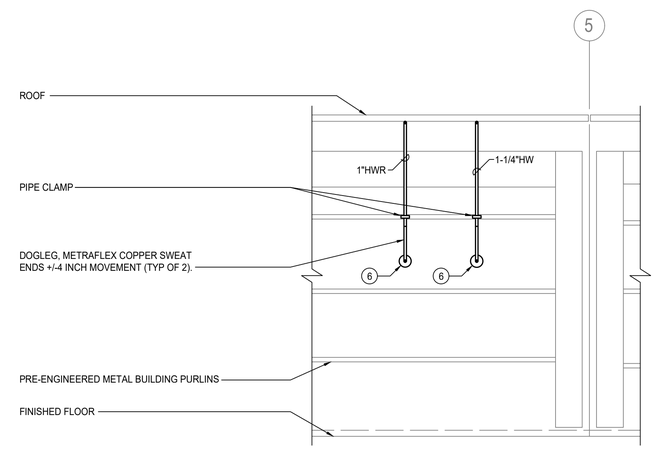

2 SEISMIC LOOP ELEVATION

SCALE: 1/4" = 1'-0"

KEY NOTES

	APPLICABLE TO THIS SHEET ONLY
1	REFER TO CIVIL PLANS FOR CONTINUATION.
2	3/4" AIR DOWN ON WALL TO QUICK CONNECTION. SEE DETAIL 7/P0.1 FOR MORE INFORMATION.
3	HW & HWR DOWN ON WALL, ATTACHED TO PRE-ENGINEERED METAL BUILDING PURLINS. SEE DETAIL 2/P2.1 FOR MORE INFORMATION.
4	1-1/4"HW & 1"HWR TO MODULAR BUILDING. SITE PLUMBER TO CONNECT HW & HWR IN MODULAR BUILDING. COORDINATE WITH GLOBAL MODULAR FOR FINAL LOCATION (951-686-3533).
5	ROUTE PIPING TIGHT TO ROOF OF STRUCTURE. SEE DETAIL 8/P0.1 FOR MORE INFORMATION.
6	ROUTE PIPING TO ADJACENT MODULAR BUILDING. PROVIDE FLASHING AT OPENING TO CONCEAL OPENING. OPENING TO BE SIZED AS FOLLOW: PIPE OD + INSULATION + SEISMIC MOVEMENT + 2". PROVIDE SHEET METAL ESCUTCHEON PLATE THAT WILL YIELD DURING SEISMIC EVENT. ESCUTCHEON SHALL NOT RESTRICT MOVEMENT OF PIPING

PLUMBING GENERAL NOTES

	APPLICABLE TO THIS SHEET ONLY
1	SEE PLUMBING FIXTURE SCHEDULE FOR BRANCH PIPE SIZING.
2	PROVIDE ANGLE STOPS FOR ALL PLUMBING FIXTURE BRANCH PIPING LINES.
3	REFER TO ARCHITECTURAL PLANS FOR THE LOCATION OF ALL FIXTURES, INCLUDING BUT NOT LIMITED TO FLOOR SINKS, FLOOR DRAINS, TRENCH DRAINS AND ROOF DRAINS. THE ARCHITECTURAL PLANS SHALL TAKE PRECEDENCE.
4	REFER TO MECHANICAL PLANS FOR LOCATIONS OF MECHANICAL EQUIPMENT AND DUCTWORK. COORDINATE ALL WORK TO FIT IN AVAILABLE SPACE.
5	COORDINATE PIPE ROUTING WITH LOCATION OF ELECTRICAL PANELS AND DATA EQUIPMENT. PIPING SHALL NOT BE ROUTED ABOVE THESE ITEMS.

REV.	DESCRIPTION	CK'D	APP	DATE

PUBLIC WORKS DEPARTMENT ENGINEERING DIVISION

CITY OF SAN BUENAVENTURA

FIRE STATION NO. 7
FLOOR PLAN -
WATER AND AIR

DRN. BY: TO | DES. BY: EF | CK'D. BY: DS

PRINCIPAL ENGINEER — DATE: 5 May 2026

CITY ENGINEER — DATE: 5/7/2026

SPEC. NUMBER 2025-010 | PROJECT NUMBER FA11-1061

April 17, 2026 | SHEET 87 OF 151 | DWG. NO. 2025-D-010

ENGINEERING SHEET NO. P2.1

REGISTERED PROFESSIONAL ENGINEER — STEFAN P. STARRA — M 34068 — EXP. 6/30/26 — MECHANICAL — STATE OF CALIFORNIA

3C Engineering
An EMCOR Company
(805) 540 1363
1500 Fulton St, San Luis Obispo, CA, 93401

BY Mesa Energy Systems, Inc., ALL COMMON LAW COPYRIGHT AND OTHER PROPERTY RIGHTS RESERVE THIS DOCUMENT AS AN ORIGINAL AND UNPUBLISHED WORK PRODUCT. THIS WORK SHALL NOT BE DUPLICATED, COPIED, DISCLOSED OR USED IN CONNECTION WITH ANY WORK OR PROJECT OTHER THAN THE SPECIFIC PROJECT FOR WHICH IT HAS BEEN PREPARED, NOR SHALL IT BE ASSIGNED TO ANY THIRD PARTY WITHOUT FIRST OBTAINING THE EXPRESS WRITTEN CONSENT OF VISUAL CONTACT. THIS DOCUMENT SHALL CONSTITUTE CONCLUSIVE EVIDENCE OF ACCEPTANCE OF THESE RESTRICTIONS.

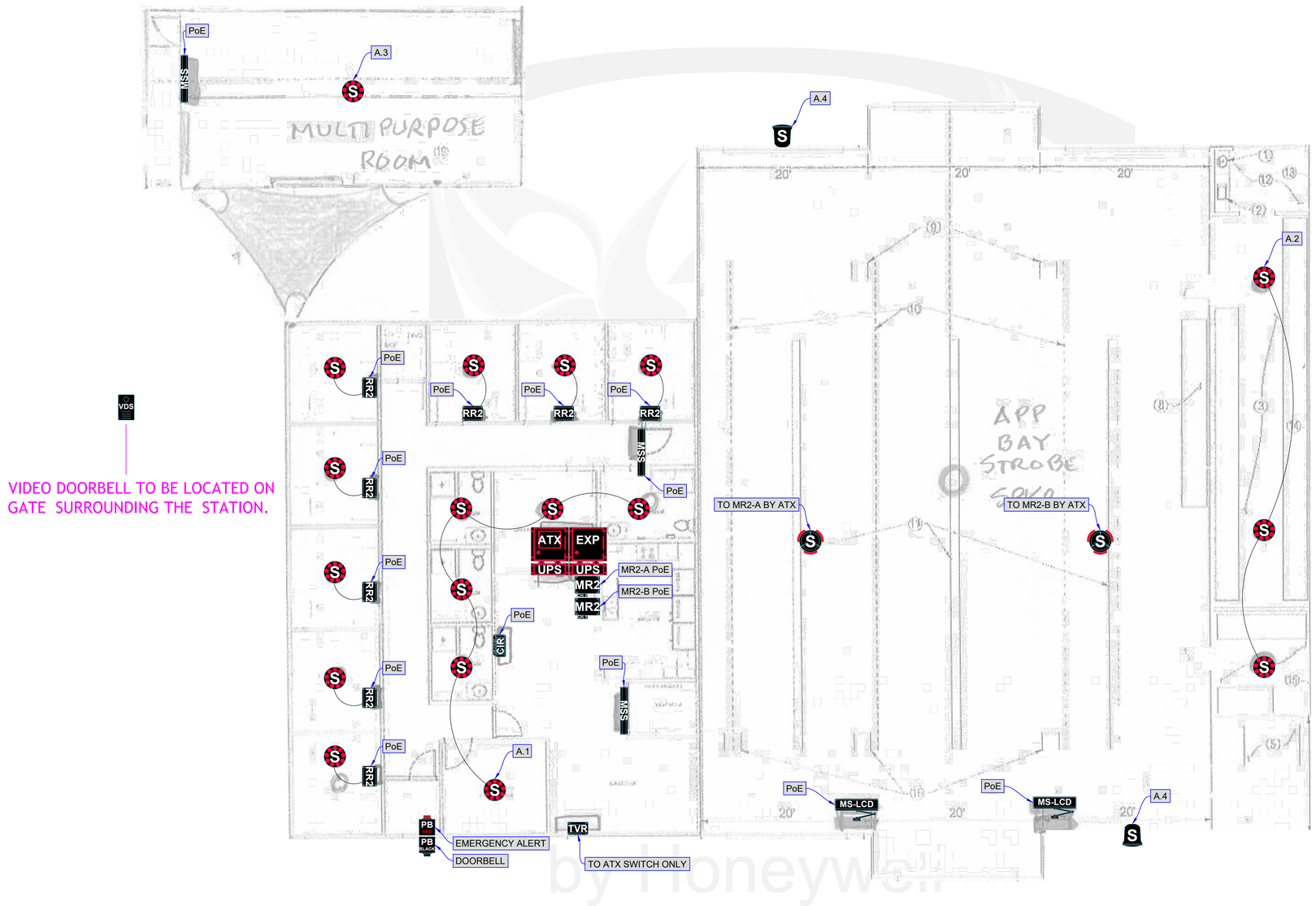

US DIGITAL DESIGNS	
Count	Name
1	G2 ATX STATION CONTROLLER (ATX)
1	G2 EXPANSION UNIT (G2-EXP)
2	G2 ATX-EXP RACK EARS (ATX-E)
2	UPS (UPS-STD)
2	UPS WALL-MOUNT BRACKET (UPS-WMB)
1	G2 CIR BACK BOX - SURFACE MOUNT (CIR-SMB)
1	G2 COLOR INDICATOR REMOTE (CIR)
1	G2 HDTV REMOTE (TV-R)
1	PUSH BUTTON (PB-B)
1	PUSH BUTTON (PB-R)
2	G2 MESSAGE REMOTE 2 (MR-2)
2	G2 MESSAGE SIGN LCD (USDD-LCD-SIGN)
3	G2 MESSAGE SIGN STANDARD (MS-G2-S)
2	MS MOUNT ARTICULATING (MS-MNT)
8	G2 ROOM REMOTE 2 (RR-2)
18	G2 LED SPEAKER (SPK-LED-FM)
2	G2 OMNISTROBE SPEAKER (SPK-OAS)
2	SPEAKER WEATHER-PROOF (SPK-W-SM)
1	VIDEO DOOR STATION (VDS)

POE PORTS REQUIRED ON ATX	
Count	Name
16	G2 PoE PORT REQUIRED

SYMBOL	DESCRIPTION
I/O	G2 I/O REMOTE
MR2	G2 MESSAGE REMOTE 2
RR2	G2 ROOM REMOTE 2
TVR	G2 HDTV REMOTE
CIR	G2 COLOR INDICATOR REMOTE
PB RED	PUSH BUTTON - RED
PB BLACK	PUSH BUTTON - BLACK
VDS	G2 VIDEO DOOR STATION
LAR	G2 LOCAL AREA REMOTE
STR	G2 STROBE LIGHT
T	OEM TRANSFORMER
S	G2 OMNIALERT STROBE SPEAKER
S	G2 LED SPEAKER, FLUSH MOUNT
S	G2 LED SPEAKER, METAL BOX
S	SPEAKER, WEATHER-PROOF
S	SPEAKER, FLUSH MOUNT
S	SPEAKER, METAL BOX
MSM	G2 MESSAGE SIGN (MINI 12")
MSS	G2 MESSAGE SIGN (STANDARD 24")
MSE	G2 MESSAGE SIGN (EXTENDED 36")
MS-LCD	G2 LCD MESSAGE SIGN
FPM - XX"	OEM FLAT PANEL MONITOR, XX", WITH MOUNT
VC	VOLUME CONTROL (CUSTOMER SUPPLIED)
	ADAPTER PLATE SINGLE
	ADAPTER PLATE DOUBLE
	ARTICULATING ARM MOUNT - LONG

SYMBOL	DESCRIPTION
ATX	G2 ATX STATION CONTROLLER
EXP	G2 EXPANSION MODULE
ATX LT	G2 ATX LITE STATION CONTROLLER
UPS	G2-UNINTERRUPTIBLE POWER SUPPLY
AMP	OEM AMPLIFIER

INSTALLER NOTES:

1. INSTALLER TO VERIFY WALL AND CEILING TYPE TO DETERMINE NEED FOR FLUSH OR SURFACE MOUNT INSTALLATION OF EQUIPMENT SPECIFIED.
2. INSTALLER TO COORDINATE CONNECTION BETWEEN ATX STATION CONTROLLER'S LINE-LEVEL AUDIO OUTPUT AND (EXISTING) OWNER-FURBISHED HOUSE AUDIO SYSTEM (AMP). (IF APPLICABLE)
3. INSTALLER TO PROVIDE CAT6 & 18/4 CABLES FROM ATX CONTROLLER TO CUSTOMER'S STATION RADIO FOR BACKUP.
4. INSTALLER TO PROVIDE CAT6 CABLE FROM ATX CONTROLLER WAN OUTPUT TO CUSTOMER'S IN-STATION NETWORK.
5. INSTALLER TO COORDINATE CONNECTION BETWEEN EXISTING STATION LIGHTING CONTROL SYSTEM AND RELAY OUTPUT FROM ATX STATION CONTROLLER OR I/O REMOTE WITH OWNER. (IF APPLICABLE)
6. VOLUME CONTROL TO BE PROVIDED BY OWNER OR INSTALLER IF SHOWN ON DRAWING.
7. INSTALLER TO VERIFY AND CONSIDER LOCATION(S) OF NETWORK AND RADIO CONNECTIONS.

PoE = G2 ATX Power-over-Ethernet (PoE) ports 1...8 and G2 Expansion Module ports 1...12

A.n = G2 ATX Amplifier 1...4 | **EA.n** = G2 External Amplifier 1...n | **CH.n** = G2 Message Remote 2 Channel 1 or 2

NOTES:

1. SEE ARCHITECTURAL SPECIFICATIONS FOR ALL ROUGH-IN AND INSTALLATION DETAILS.
2. US DIGITAL DESIGNS DOES NOT SUPPLY BACK BOXES, CONDUITS, OR MOUNTING FASTENERS.
3. US DIGITAL DESIGNS FIRE STATION ALERTING PLANS ARE DIAGRAMMATIC AND FOR QUOTING PURPOSES ONLY. DRAWING MAY NOT BE TO SCALE.
4. PHOENIX G2 SYSTEM IS ABLE TO SIGNAL OWNER-FURBISHED SYSTEMS, (EXHAUST, LIGHT, GAS SHUT OFF, ETC.) BUT USDD DOES NOT SUPPLY THESE SYSTEMS AND CANNOT WARRANT OR SUPPORT ANY OF THEIR PERFORMANCE BEYOND THE TRANSMISSION OF RELAY SIGNAL TO THEM.

THIS DOCUMENT CONTAINS CONFIDENTIAL AND PROPRIETARY INFORMATION WHICH IS THE EXCLUSIVE PROPERTY OF US DIGITAL DESIGNS, INC. REPRODUCTION, DISTRIBUTION OR USE BY OTHERS, IN WHOLE OR IN PART, IS NOT PERMITTED WITHOUT THE WRITTEN AUTHORIZATION FROM US DIGITAL DESIGNS, INC.

REV.	DESCRIPTION	CK'D	APP	DATE

PUBLIC WORKS DEPARTMENT ENGINEERING DIVISION

CITY OF SAN BUENAVENTURA

INTERIM FIRE STATION NO. 7

STATION ALERTING SYSTEM

DRN. BY: DMG	DES. BY: DMG	CK'D. BY: JRA

PRINCIPAL ENGINEER — DATE: 5 May 2026

CITY ENGINEER — DATE: 5/7/2026

SPEC. NUMBER 2025-010 | PROJECT NUMBER FA11-1061

April 24, 2025 | SHEET 88 OF151 | DWG. NO. 2025-D-010

GENERAL IRRIGATION NOTES

ALL LOCAL MUNICIPAL AND STATE LAWS, RULES AND REGULATIONS GOVERNING OR RELATING TO ANY PORTION OF THIS WORK ARE HEREBY INCORPORATED INTO AND MADE A PART OF THESE SPECIFICATIONS AND THEIR PROVISIONS SHALL BE CARRIED OUT BY THE CONTRACTOR.

THE CONTRACTOR SHALL VERIFY THE LOCATIONS OF ALL EXISTING UTILITIES, STRUCTURES AND SERVICES BEFORE COMMENCING WORK. THE LOCATIONS OF UTILITIES, STRUCTURES AND SERVICES SHOWN IN THESE PLANS ARE APPROXIMATE ONLY. ANY DISCREPANCIES BETWEEN THESE PLANS AND ACTUAL FIELD CONDITIONS SHALL BE REPORTED TO THE OWNER'S REPRESENTATIVE.

THE CONTRACTOR SHALL OBTAIN THE PERTINENT ENGINEERING OR ARCHITECTURAL PLANS BEFORE BEGINNING WORK.

THE CONTRACTOR SHALL OBTAIN ALL NECESSARY PERMITS REQUIRED TO PERFORM THE WORK INDICATED HEREIN BEFORE BEGINNING WORK.

THIS DESIGN IS DIAGRAMMATIC. ALL EQUIPMENT SHOWN IN PAVED AREAS IS FOR DESIGN CLARITY ONLY AND IS TO BE INSTALLED WITHIN PLANTING AREAS.

ALL IRRIGATION EQUIPMENT BOXES WITHIN THE PUBLIC RIGHT OF WAY SHALL BE TRAFFIC RATED CONCRETE BOXES WITH METAL LIDS. REFER TO CITY STANDARD DETAILS.

DO NOT WILLFULLY INSTALL ANY EQUIPMENT AS SHOWN ON THE PLANS WHEN IT IS OBVIOUS IN THE FIELD THAT UNKNOWN CONDITIONS EXIST THAT WERE NOT EVIDENT AT THE TIME THESE PLANS WERE PREPARED. ANY SUCH CONDITIONS SHALL BE BROUGHT TO THE ATTENTION OF THE OWNER'S REPRESENTATIVE PRIOR TO ANY WORK OR THE IRRIGATION CONTRACTOR SHALL ASSUME ALL RESPONSIBILITY FOR ANY FIELD CHANGES DEEMED NECESSARY BY THE OWNER.

INSTALL ALL EQUIPMENT AS SHOWN IN THE DETAILS AND SPECIFICATIONS. CONTRACTOR SHALL BE RESPONSIBLE TO COMPLY WITH LOCAL CITY, COUNTY AND STATE REQUIREMENTS FOR BOTH EQUIPMENT AND INSTALLATION.

ACTUAL LOCATION FOR THE INSTALLATION OF THE BACKFLOW PREVENTER AND THE AUTOMATIC CONTROLLER IS TO BE DETERMINED IN THE FIELD BY THE OWNER'S AUTHORIZED REPRESENTATIVE.

CONTRACTOR IS TO PROVIDE AN ADDITIONAL PILOT WIRE TO THE END OF THE MAINLINE RUN IN TWO DIRECTIONS FROM THE CONTROLLER.

ALL PIPE UNDER PAVED AREAS TO BE INSTALLED IN A SCH. 40 SLEEVE TWICE THE DIAMETER OF THE PIPE CARRIED. ALL WIRE UNDER PAVED AREAS TO BE INSTALLED IN A SCH. 40 SLEEVE THE SIZE REQUIRED TO EASILY PULL WIRE THROUGH. ALL SLEEVES TO BE INSTALLED WITH A MINIMUM DEPTH AS SHOWN ON THE SLEEVING DETAILS. SLEEVES TO EXTEND AT LEAST 12" PAST THE EDGE OF THE PAVING.

ALL QUICK COUPLER VALVES TO BE INSTALLED IN SHRUB OR GROUND COVER AREAS WHERE POSSIBLE. ALL QUICK COUPLER VALVES TO BE INSTALLED AS SHOWN ON THE INSTALLATION DETAILS. INSTALL ALL QUICK COUPLER VALVES WITHIN 18" OF HARDSCAPE.

ALL HEADS ARE TO BE INSTALLED WITH THE NOZZLE, SCREEN AND ARCS SHOWN ON THE PLANS. ALL HEADS ARE TO BE ADJUSTED TO PREVENT OVERSPRAY ONTO BUILDINGS, WALLS, FENCES AND HARDSCAPE. THIS INCLUDES, BUT NOT LIMITED TO, ADJUSTMENT OF DIFFUSER PIN OR ADJUSTMENT SCREW, REPLACEMENT OF PRESSURE COMPENSATING SCREENS, REPLACEMENT OF NOZZLES WITH MORE APPROPRIATE RADIUS UNITS AND THE REPLACEMENT OF NOZZLES WITH ADJUSTABLE ARC UNITS.

CONTRACTOR SHALL FIELD VERIFY DEPTH AND LOCATION OF ALL EXISTING UTILITIES PRIOR TO BIDDING WORK AND AGAIN PRIOR TO COMMENCING WORK. VERIFICATION SHALL BE DOCUMENTED AND DELIVERED TO OWNER'S REPRESENTATIVE.

CONTRACTOR SHALL BE RESPONSIBLE FOR THE PLACEMENT OF ALL SCH 40 PVC SLEEVING UNDER PAVING, WALLS AND CURBS AT NO LESS THAN 24" BELOW GRADE AND NO LESS THAN 2X DIAMETER OF IRRIGATION PIPE IN AREAS WHERE PIPE CROSSING WILL OCCUR.

EXISTING IRRIGATION IN ADJACENT AREAS SHALL BE PROTECTED IN PLACE FOR CONTINUED USE. CONTRACTOR SHALL VERIFY THE EXTENT OF THE EXISTING SYSTEM AND MAKE ADJUSTMENTS TO CAP OFF OR MODIFY THE EXITING SYSTEM TO MEET THE NEW LANDSCAPE CONDITION IF NECESSARY.

CONTRACTOR SHALL BE RESPONSIBLE FOR ALL EXISTING IRRIGATION EQUIPMENT DAMAGED DURING CONSTRUCTION AND IF DAMAGED, SHALL REPLACE WITH SAME MANUFACTURER AND MODEL.

ALL EQUIPMENT LOCATIONS AND PIPE ROUTING SHALL BE STAKED IN FIELD FOR REVIEW AND APPROVAL PRIOR TO INSTALLATION. ALL LAYOUT SHALL BE AS APPROVED BY, LANDSCAPE ARCHITECT, AND OWNER'S AUTHORIZED REPRESENTATIVE PRIOR TO INSTALLATION. NO EQUIPMENT SHALL BE INSTALLED WITHOUT APPROVAL OF LAYOUT.

CONTRACTOR SHALL BE RESPONSIBLE FOR COMPLETE INSTALLATION OF PROPOSED IRRIGATION EQUIPMENT AND RELATED EQUIPMENT, INCLUDING BUT NOT LIMITED TO R.C.V. CONTROL WIRES, ELECTRICAL WIRES, CONDUIT, REMOTE CONTROL VALVES, ETC. ALL LAYOUT AND LOCATIONS SHALL BE CONFIRMED WITH OWNER'S AUTHORIZED REPRESENTATIVE PRIOR TO COMMENCING WORK.

CONTRACTOR SHALL ADJUST AND CAP OFF EXISTING ADJACENT IRRIGATION SYSTEM AS REQUIRED. SYSTEM SHALL PROVIDE COMPLETE 100% HEAD TO HEAD COVERAGE IN ALL AREAS AS APPROVED BY OWNER'S AUTHORIZED REPRESENTATIVE. ALL LAYOUT SHALL BE CONFIRMED WITH OWNER'S AUTHORIZED REPRESENTATIVE PRIOR TO COMMENCING WORK.

CONTRACTOR SHALL REFER TO CORRESPONDING ON-SITE WATER AND SEWER PLAN FOR UNDERLYING WATERLINES, EASMENTS, AND OTHER RELATED EQUIPMENT. CONTRACTOR SHALL VERIFY ALL EXISTING SITE CONDITIONS IN FIELD WITH OWNERS AUTHORIZED REPRESENTATIVE PRIOR TO COMMENCING WORK.

RECIRCULATING WATER SYSTEMS SHALL BE USED FOR WATER FEATURES.

PRESSURE REGULATING DEVICES ARE REQUIRED ON ALL RECYCLED WATER SYSTEMS, AND IF WATER PRESSURE IS BELOW OR EXCEEDS THE RECOMMENDED PRESSURE OF THE SPECIFIED IRRIGATION DEVICES.

INCLUDE CHECK VALVES OR ANTI-DRAIN VALVES TO PREVENT LOW HEAD DRAINAGE.

CONTRACTOR TO PROVIDE A NEATLY DRAWN LAMINATED IRRIGATION LAYOUT CHART FOR AUTOMATIC CONTROLLERS. PEDESTALS SHALL BE LOCATED WITHIN PLANTER AREAS WITH AN 18" PAD OF DG OR MULCH AT FRONT OF ACCESS. THE CENTRAL CONTROLLER SHALL INCLUDE A MANUFACTURER SUPPORT PAGE.

A DIAGRAM OF THE IRRIGATION PLAN SHOWING HYDROZONES SHALL BE KEPT WITH THE IRRIGATION CONTROLLER FOR SUBSEQUENT MANAGEMENT PURPOSES

A CERTIFICATE OF COMPLETION SHALL BE FILLED OUT AND CERTIFIED BY EITHER THE SIGNER OF THE IRRIGATION PLANS, OR THE LICENSED LANDSCAPE CONTRACTOR FOR THE PROJECT.

AN IRRIGATION AUDIT REPORT SHALL BE COMPLETED AT THE TIME OF FINAL INSPECTION. THE REPORT SHALL INCLUDE THE FOLLOWING:

a. CONTROLLER PROGRAM IRRIGATION SCHEDULE TO INCLUDE: START TIMES, PROGRAMS, AND RUN TIMES. SCHEDULE SHALL CONSIDER APPLICATION RATE, SOIL TYPE, PLANT FACTORS, SLOPE, AND EXPOSURE .
b. CONTROLLER PROGRAMMING TO ON-SITE WEATHER SENSOR OR CIMIS STATION
c. CONTROLLER PROGRAMMING TO FLOW SENSOR AND MASTER VALVE, OR LEARNED RUN TIMES.
d. VERIFICATION OF EFFICIENT WATER USE WITH NO RUNOFF OR OVERSPRAY BY TESTING MIN 15% OF THE SITE.
e. VERIFICATION OF THE REDUCED SIZE IRRIGATION PLAN, LAMINATED WITH LAYOUT CHART INDICATION VALVE NUMBER AND COLOR-CODED AREA OF SYSTEM LIMITS AND IRRIGATION RUN SCHEDULE.

Maximum Applied Water Allowance & Estimated Total Water Use (MAWA & ETWU)

Project Name → INTERIM FIRE STATION NO.7
City Location → Ventura
Site Type → Commercial
Annual Eto (inches/yr) → 43.5

Zone or Valve	Water Use Plant Factor		Irrigation Method	Irrigation Efficiency (IE)	ETAF (PF/IE)	Hydrozone Area (sqft.)	ETAF x Area	Estimated Total Water Use (gal./yr.)	Percentage of Landscape Area
Regular Landscape Areas									
1	0.2	Low	Shrub Drip Emitter	0.81	0.2	2,620	647	17,447	10.84%
2	0.2	Low	Tree Bubbler	0.81	0.2	30	7	200	0.12%
3	0.2	Low	Shrub Drip Emitter	0.81	0.2	3,897	962	25,951	16.12%
4	0.5	Moderate	Turf Spray	0.75	0.7	800	533	14,384	3.31%
5	0.5	Moderate	Turf Spray	0.75	0.7	800	533	14,384	3.31%
6	0.2	Low	Shrub Drip Emitter	0.81	0.2	3,432	847	22,855	14.20%
7	0.5	Moderate	Turf Spray	0.75	0.7	800	533	14,384	3.31%
8	0.5	Moderate	Turf Spray	0.75	0.7	800	533	14,384	3.31%
9	0.2	Low	Tree Bubbler	0.81	0.2	20	5	133	0.08%
10	0.2	Low	Shrub Drip Emitter	0.81	0.2	1,293	319	8,610	5.35%
11	0.2	Low	Shrub Drip Emitter	0.81	0.2	1,738	429	11,574	7.19%
12	0.2	Low	Shrub Drip Emitter	0.81	0.2	3,756	927	25,012	15.54%
13	0.2	Low	Shrub Drip Emitter	0.81	0.2	417	103	2,777	1.73%
14	0.2	Low	Tree Bubbler	0.81	0.2	20	5	133	0.08%
15	0.2	Low	Shrub Drip Emitter	0.81	0.2	491	121	3,270	2.03%
16	0.2	Low	Shrub Drip Emitter	0.81	0.2	3,255	804	21,676	13.47%
					SUBTOTAL →	**24,169**	**7,311**	**197,174**	
Special Landscape Areas									
					SUBTOTAL →	**0**	**0**	**0**	
					GRAND TOTAL →	**24,169**			100.00%
						Estimated Total Water Use (ETWU) →		**197,174**	
						Maximum Allowed Water Allowance (MAWA) →		**293,327**	

ETAF Calculations
Regular Landscape Areas
Total ETAF x Area 7,311
Total Area 24,169
Average ETAF 0.30

All Landscape Areas
Total ETAF x Area 7,311
Total Area 24,169
Sitewide ETAF 0.30

Notes:
ETWU meets MAWA requirement.
Average ETAF meets requirement for this site type.

Calculator developed July 27, 2015.
This calculator is for estimating purposes only.
Hunter assumes no liability for use of this calculator.

Irrigation Controller Schedule

				JAN	FEB	MAR	APR	MAY	JUN	JUL	AUG	SEP	OCT	NOV	DEC	Total:
	City:	Ventura	ETo/Mo	2.2	2.6	3.2	3.8	4.6	4.7	5.5	4.9	4.1	3.4	2.5	2.0	43.5
POC / Controller:	C		ETo/Day	0.07	0.09	0.10	0.13	0.15	0.16	0.18	0.16	0.14	0.11	0.08	0.06	
Irrigation Type & Qty. of Valves	*AKc (%)*	*Precip. Rate*	*Irr. Effic.*													
Tree Bubbler (LW)	0.3	0.98	0.81	2	2	2	3	3	4	4	4	3	2	2	1	Min/Day per Valve
3				**5**	**6**	**7**	**9**	**10**	**11**	**12**	**11**	**9**	**7**	**6**	**4**	**Total Min/Day**
Shrub Drip Emitter (LW)	0.3	0.15	0.81	11	14	15	19	22	23	26	23	20	16	12	10	Min/Day per Valve
9				**95**	**124**	**138**	**169**	**198**	**209**	**237**	**211**	**182**	**146**	**111**	**86**	**Total Min/Day**
Turf Spray (MW)	0.6	0.77	0.75	4	6	6	8	9	10	11	10	9	7	5	4	Min/Day per Valve
4				**18**	**23**	**26**	**32**	**37**	**39**	**44**	**39**	**34**	**27**	**21**	**16**	**Total Min/Day**
Total Valve Count			**TOTAL RUN TIMES (MINS):**	**117**	**153**	**170**	**209**	**245**	**259**	**293**	**261**	**226**	**181**	**138**	**106**	
16				**JAN**	**FEB**	**MAR**	**APR**	**MAY**	**JUN**	**JUL**	**AUG**	**SEP**	**OCT**	**NOV**	**DEC**	

Weekly Irrigation Schedule

Irrigation Type & Qty. of Valves	*Cycles per day*	*Watering days/we*		JAN	FEB	MAR	APR	MAY	JUN	JUL	AUG	SEP	OCT	NOV	DEC	
Tree Bubbler (LW)	2	3		2	2	3	3	4	4	5	4	4	3	2	2	Min/Day per Valve
3				**6**	**7**	**8**	**10**	**12**	**12**	**14**	**13**	**11**	**9**	**7**	**5**	**Total Min/Day**
Shrub Drip Emitter (LW)	2	3		12	16	18	22	26	27	31	27	24	19	14	11	Min/Day per Valve
9				**110**	**144**	**161**	**197**	**231**	**244**	**276**	**246**	**213**	**171**	**130**	**100**	**Total Min/Day**
Turf Spray (MW)	2	3		5	7	8	9	11	11	13	11	10	8	6	5	Min/Day per Valve
4				**21**	**27**	**30**	**37**	**43**	**46**	**52**	**46**	**40**	**32**	**24**	**19**	**Total Min/Day**
Total Valve Count																
16																

NOTE TO PROPERTY OWNER - The above irrigation schedule tells you how often and how long to run your irrigation system. Your irrigation should be programmed to run a maximum of three (3) days per week for each valve between the hours of 7:00 PM and 10:00 AM. Depending on the soil type and slope of your yard you may have to split the run time into 2 or 3 shorter cycles during one night in order to avoid the water running off your yard. These numbers are based on the historical average weather for the area and may need to be slightly adjusted based on the actual weather conditions each year. By following the irrigation schedule shown above you will likely save in excess of 20% of your annual water use for landscape irrigation and keep your plants healthy by not overwatering.

VALVE SCHEDULE

NUMBER	MODEL	SIZE	TYPE	GPM	WIRE	PSI	PSI @ POC	PRECIP
1	RAIN BIRD XCZ-075-PRF	3/4"	DRIP EMITTER	4.5	428.5	42.4		0.13 in/h
2	RAIN BIRD PEB	1"	BUBBLER	1.5	422.1	31.4		1.08 in/h
3	RAIN BIRD XCZ-075-PRF	3/4"	DRIP EMITTER	5.79	377.5	46.4		0.12 in/h
4	RAIN BIRD PEB	1"	SHRUB SPRAY	11.93	329.1	34.5		0.83 in/h
5	RAIN BIRD PEB	1"	SHRUB SPRAY	12.02	320.5	34.2		0.83 in/h
6	RAIN BIRD XCZ-075-PRF	3/4"	DRIP EMITTER	4.3	308.8	41.9		0.1 in/h
7	RAIN BIRD PEB	1"	SHRUB SPRAY	11.94	260.8	34.6		0.78 in/h
8	RAIN BIRD PEB	1"	SHRUB SPRAY	12.09	251.7	33.5		0.78 in/h
9	RAIN BIRD PEB	1"	BUBBLER	1	212.7	31.3		1.06 in/h
10	RAIN BIRD XCZ-075-PRF	3/4"	DRIP EMITTER	2.1	206.3	37.3		0.11 in/h
11	RAIN BIRD XCZ-075-PRF	3/4"	DRIP EMITTER	2.3	189.1	37.7		0.09 in/h
12	RAIN BIRD XCZ-075-PRF	3/4"	DRIP EMITTER	4.53	130.6	42.6		0.09 in/h
13	RAIN BIRD XCZ-075-PRF	3/4"	DRIP EMITTER	2.5	470.7	38.0		0.21 in/h
14	RAIN BIRD PEB	1"	BUBBLER	1	482.3	31.3		0.98 in/h
15	RAIN BIRD XCZ-075-PRF	3/4"	DRIP EMITTER	3.6	560.1	40.5		0.15 in/h
16	RAIN BIRD XCZ-075-PRF	3/4"	DRIP EMITTER	3.83	545.1	40.6		0.08 in/h
	Common Wire				696.5			

CRITICAL ANALYSIS

Generated: 2026-04-13 11:53

P.O.C. NUMBER: 01
Water Source Information: Ventura Water (CWO# 25-01-0883)

FLOW AVAILABLE
Point of Connection Size: 1"
Flow Available 18.2 GPM

PRESSURE AVAILABLE
Static Pressure at POC: 85 PSI
Pressure Available: 85 PSI

DESIGN ANALYSIS
Maximum Station Flow: 12.09 GPM
Flow Available at POC: 18.2 GPM
Residual Flow Available: 6.11 GPM

Critical Station: 3
Design Pressure: 30 PSI
Friction Loss: 2.72 PSI
Fittings Loss: 0.27 PSI
Elevation Loss: 0 PSI
Loss through Valve: 13.4 PSI
Pressure Req. at Critical Station: 46.4 PSI
Loss for Fittings: 0.1 PSI
Loss for Main Line: 0.96 PSI
Loss for POC to Valve Elevation: 0 PSI
Loss for Backflow: 11.0 PSI
Loss for Master Valve: 0.3 PSI
Critical Station Pressure at POC: 58.7 PSI
Pressure Available: 85 PSI
Residual Pressure Available: 26.3 PSI

REV.	DESCRIPTION	CK'D	APP	DATE
-	PROGRESS SUBMITTAL	-	-	04.13.26
-	PROGRESS SUBMITTAL	-	-	03.20.26
-	PROGRESS SUBMITTAL	-	-	06.13.25

PUBLIC WORKS DEPARTMENT ENGINEERING DIVISION
CITY OF SAN BUENAVENTURA

INTERIM FIRE STATION NO. 7
IRRIGATION CALCULATION

DRN. BY: RL DES. BY: RL CK'D. BY: RL

PLANS PREPARED BY:
DESIGN STUDIOS
LANDSCAPE DEVELOPMENT LLC

88 N. Oak Street, Suite 1A
Ventura, California 93001
Phone 661-295-1970
Fax 661-295-1969

LICENSED LANDSCAPE ARCHITECT
ROBERTO G LEO
NO. LA 6425
Signature
JULY 31, 2026
Renewal Date
APR. 13, 2026
Date
STATE OF CALIFORNIA

PRINCIPAL ENGINEER 5 May 2026 DATE
CITY ENGINEER 5/7/2026 DATE

SPEC. NUMBER 2025-010 PROJECT NO. FA11-1061
April 13, 2026 SHEET 89 OF 151 DWG.NO.2025-D-010

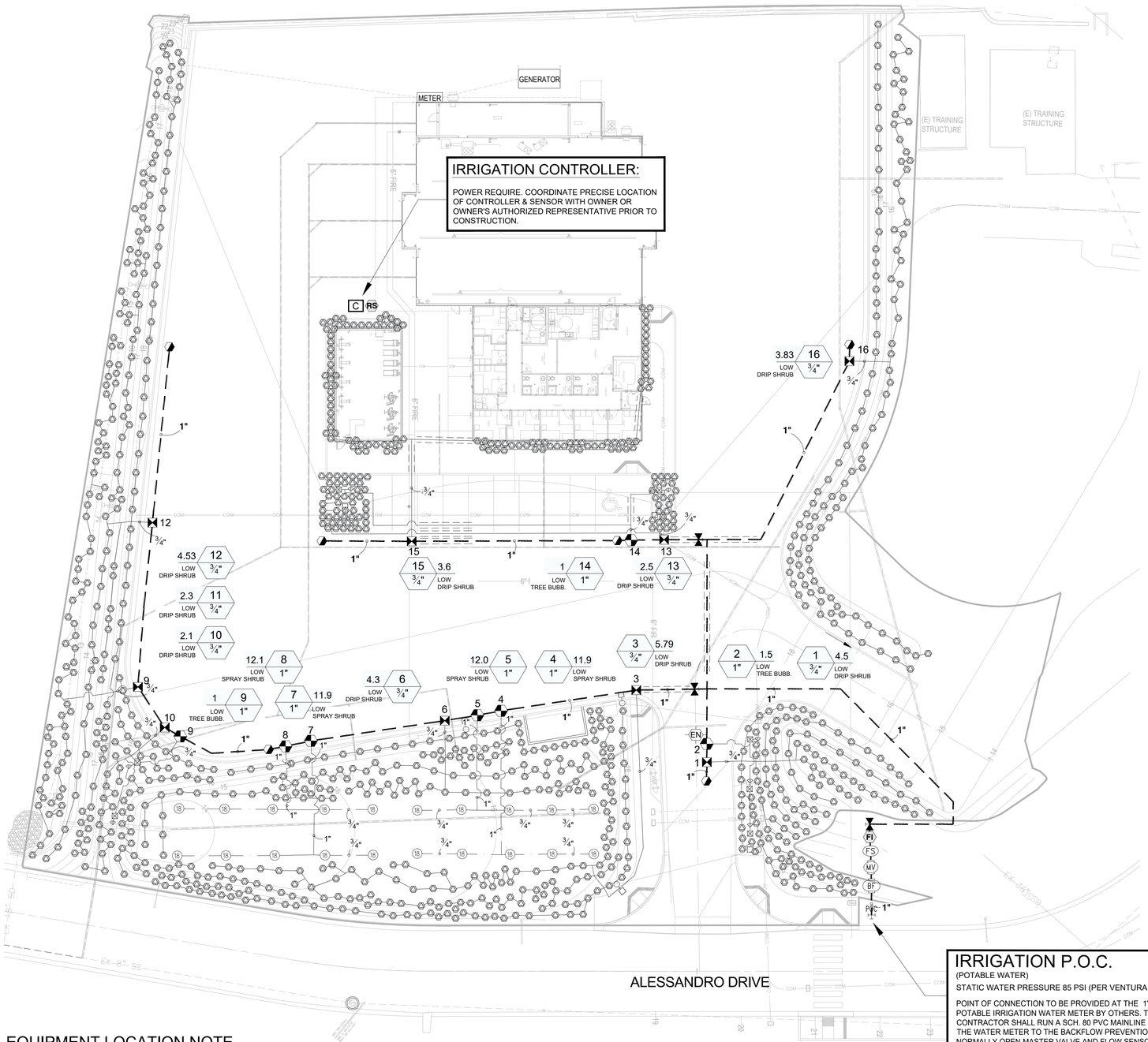

IRRIGATION SCHEDULE

SYMBOL	MANUFACTURER/MODEL/DESCRIPTION	QTY	PSI
4 6 8 10 / 12 15 18	RAIN BIRD 1800-PA-8S-PRS ADJ SHRUB SPRAY ON FIXED RISER WITH THE PA-8S-PRS 30 PSI PRESSURE REGULATING SHRUB ADAPTER. USE WITH 1/2" MPT THREADED RISERS.	20	30
1401 1402 1404 1408	RAIN BIRD 1804-SAM-PRS-1400 FLOOD 1401 FLOOD BUBBLER 4.0" POPUP WITH CHECK VALVE AND PRESSURE REGULATOR. INSTALL W/ PA-80 ADAPTER.	7	30
1401 1402 1404 1408	RAIN BIRD RWS-B-C-SOCK 1401 ROOT WATERING SYSTEM WITH 4.0" DIAMETER X 36.0" LONG WITH LOCKING GRATE, SEMI-RIGID MESH TUBE. CHECK VALVE AND SAND SOCK. RAIN BIRD BUBBLER OPTION AS INDICATED: 1401 0.25 GPM, 1402 0.5 GPM, 1404 1.0 GPM, 1408 2.0 GPM.	7	30

SYMBOL	MANUFACTURER/MODEL/DESCRIPTION	QTY
	RAIN BIRD XCZ-075-PRF LOW FLOW DRIP CONTROL KIT, 3/4" LOW FLOW VALVE, 3/4" PRESSURE REGULATING RBY FILTER, AND 30PSI PRESSURE REGULATOR. 0.2GPM-5GPM.	9
	SHRUB EMITTER SALCO PRO-SPEC EMITTER SLV-PST-CV-2; 1/2" FIPT (PST) INLET ON SALCO IH RISER; MARLEX FITTING; PVC TEE	1,004

SYMBOL	MANUFACTURER/MODEL/DESCRIPTION	QTY
	RAIN BIRD PEB 1", 1-1/2", 2" PLASTIC INDUSTRIAL VALVES. LOW FLOW OPERATING CAPABILITY, GLOBE CONFIGURATION.	7
	HUNTER HQ-33DLRC QUICK COUPLER VALVE, YELLOW LOCKING RUBBER COVER, RED BRASS AND STAINLESS STEEL, WITH 3/4" NPT INLET, 2-PIECE BODY.	6
	NIBCO T-113 CLASS 125 BRONZE GATE SHUT OFF VALVE WITH WHEEL HANDLE, SAME SIZE AS MAINLINE PIPE DIAMETER AT VALVE LOCATION. SIZE RANGE - 1/4IN. - 3IN.	3
MV	SUPERIOR 3200 1" NORMALLY CLOSED BRASS MASTER VALVE THAT PROVIDES DIRTY WATER PROTECTION AND NO MINIMUM FLOW FEATURE, WHICH ENSURES RELIABLE OPENING AND CLOSING OF THE VALVE IN EXTREME HIGH OR LOW FLOW SCENARIOS. AVAILABLE IN 3/4IN.,1IN.1-1/2IN.,2IN.,2-1/2IN. AND 3IN..	1
BF	FEBCO 825YA 1" REDUCED PRESSURE BACKFLOW PREVENTER	1
C	HUNTER PCC-1200 LIGHT COMMERCIAL & RESIDENTIAL CONTROLLER, 12-STATION FIXED CONTROLLER, 120 VAC, OUTDOOR MODEL	1
RS	HUNTER SOLAR-SYNC-SEN SOLAR, RAIN FREEZE SENSOR WITH OUTDOOR INTERFACE, CONNECTS TO HUNTER X-CORE AND ACC CONTROLLERS, INSTALL AS NOTED. INCLUDES GUTTER MOUNT BRACKET. WIRED. MODULE NOT INCLUDED.	1
FS	CREATIVE SENSOR TECHNOLOGY FSI-T10-001 1IN. PVC TEE TYPE FLOW SENSOR W/SOCKET ENDS, CUSTOM MOUNTING TEE AND ULTRA-LIGHTWEIGHT IMPELLER ENHANCES LOW FLOW MEASUREMENT. 2 WIRE DIGITAL OUTPUT COMPATIBLE W/ALL IRRIGATION CONTROLLERS. FLOW RANGE: .86 GPM - 52 GPM.	1
FI	EZ-FLO FERTILIZING SYSTEMS EZ001-CX ONE SYSTEM FEEDS ALL ZONES, DRIP OR SPRINKLER. USED FOR SMALLER COMMERCIAL LANDSCAPES, RESIDENTIAL, HOA'S, MODEL HOMES, AND GROWER APPLICATIONS. INSTALL DIRECTLY IN THE IRRIGATION SYSTEM MAIN LINE AFTER THE BACK FLOW PREVENTER. TANK CAPACITY: 1.5 G.	1
EN	STRONG BOX SBBC-35SS HIGH PROFILE, TUBE AND WIRE CONSTRUCTION SMOOTH TOUCH SURFACE, FRONT ENTRY STAINLESS STEEL BACKFLOW ENCLOSURE.	1
POC	POINT OF CONNECTION 1" VENTURA WATER (CWO# 25-01-0883)	1
	IRRIGATION LATERAL LINE: PVC SCHEDULE 40	5,208 LF
	IRRIGATION LATERAL LINE: UVR PVC SCHEDULE 40	256.4 LF
	IRRIGATION MAINLINE: PVC SCHEDULE 40	696.5 LF
	PIPE SLEEVE: PVC SCHEDULE 40	192.2 LF

Valve Callout
- Valve Number
- Valve Flow
- Valve Size

EQUIPMENT LOCATION NOTE

1. INSTALL ALL IRRIGATION EQUIPMENT, PRESSURE MAIN LINE PIPING, CONTROL VALVES, ETC. WITHIN PLANTING AREA - ANY IRRIGATION EQUIPMENT SHOWN OUTSIDE OF PLANTING AREA IS FOR DRAWING CLARITY (TYPICAL).
2. AUTOMATIC CONTROLLER AND ALL OTHER IRRIGATION EQUIPMENT LOCATIONS SHOWN ON THIS DRAWING ARE APPROXIMATE. STAKE OUT IRRIGATION EQUIPMENT LOCATIONS FOR REVIEW AND APPROVAL BY OWNER PRIOR TO INSTALLATION. FINAL LOCATION AND EXACT POSITIONING OF IRRIGATION EQUIPMENT SHALL BE DETERMINED BY OWNER. MINOR MODIFICATIONS OF IRRIGATION EQUIPMENT LOCATIONS AS REQUESTED BY THE OWNER SHALL BE PROVIDED BY THE CONTRACTOR AT NO ADDITIONAL COST TO THE OWNER. FAILURE TO OBTAIN OWNER'S APPROVAL PRIOR TO INSTALLATION SHALL CAUSE CONTRACTOR TO MAKE OWNER DIRECTED REVISIONS AT NO ADDITIONAL COST TO OWNER.
3. REMOTE CONTROL VALVE, QUICK COUPLING VALVE AND GATE VALVE, ETC. LOCATIONS SHOWN ON THIS DRAWING ARE APPROXIMATE. THE CONTRACTOR SHALL STAKE OUT EACH ELECTRIC CONTROL VALVE, QUICK COUPLING VALVE AND GATE VALVE, ETC. LOCATION FOR REVIEW AND APPROVAL BY OWNER PRIOR TO INSTALLATION OF VALVES. SEE DETAILS FOR ADDITIONAL VALVE INSTALLATION INFORMATION. FINAL LOCATION AND EXACT POSITIONING OF IRRIGATION EQUIPMENT SHALL BE APPROVED BY THE OWNER. MINOR MODIFICATIONS OF IRRIGATION EQUIPMENT LOCATIONS AS REQUESTED BY THE OWNER SHALL BE PROVIDED BY THE CONTRACTOR AT NO ADDITIONAL COST TO THE OWNER. FAILURE TO OBTAIN OWNER'S APPROVAL PRIOR TO INSTALLATION SHALL CAUSE CONTRACTOR TO MAKE OWNER DIRECTED REVISIONS AT NO ADDITIONAL COST TO OWNER.
4. VALVES SHALL NOT BE INSTALLED IN TURF. INSTALL VALVES IN NEAREST NON-TURF PLANTED AREA.

IRRIGATION SLEEVE SIZES

PIPE SIZE	3/4"	1"	1-1/4"	1-1/2"	2"	2-1/2"	3"
SLEEVE SIZE	3"	3"	3"	4"	4"	4"	6"

NOTE: IRRIGATION CONTROL WIRE CONDUIT SIZE SHALL BE 4"

SLEEVES ARE REQUIRED FOR ALL IRRIGATION PIPING INSTALLED UNDER PAVING AREAS. REFER TO IRRIGATION SLEEVE SIZING CHART SHOWN ON THIS SHEET FOR IRRIGATION SLEEVE SIZE (TYPICAL). NOTE: FOR DRAWING CLARITY ALL IRRIGATION SLEEVES ARE NOT SIZED, BUT SHALL BE INSTALLED AND INCLUDED AS PART OF THE CONTRACTOR'S BID. IT IS THE RESPONSIBILITY OF THE CONTRACTOR TO FAMILIARIZE ITSELF WITH ALL GRADE DIFFERENCES, LOCATION OF WALLS, RETAINING WALLS, FOOTINGS, ETC. AND COORDINATE ITS WORK WITH OTHER TRADES FOR THE LOCATION AND THE INSTALLATION OF PIPE SLEEVES THROUGH WALLS, UNDER FOOTINGS, UNDER ROADWAYS, UNDER PAVING, STRUCTURES, ETC.

Scale: 1" = 20'-0"
0 5' 10' 20' 40'

N

REV.	DESCRIPTION	CK'D	APP	DATE
-	PROGRESS SUBMITTAL	-	-	04.13.26
-	PROGRESS SUBMITTAL	-	-	03.20.26
-	PROGRESS SUBMITTAL	-	-	06.13.25

PUBLIC WORKS DEPARTMENT ENGINEERING DIVISION
CITY OF SAN BUENAVENTURA

INTERIM FIRE STATION NO. 7
IRRIGATION PLAN

DRN. BY: RL DES. BY: RL CK'D. BY: RL

PRINCIPAL ENGINEER — DATE: 5 May 2026
CITY ENGINEER — DATE: 5/7/2026

SPEC. NUMBER 2025-010 PROJECT NO. FA11-1061

April 13, 2026 SHEET 90 OF 151 DWG.NO.2025-D-010

PLANS PREPARED BY:
DESIGN STUDIOS
88 N. Oak Street, Suite 1A
Ventura, California 93001
Phone 661-295-1970
Fax 661-295-1969

LICENSED LANDSCAPE ARCHITECT — ROBERT CLAYTON HOLLOWAY — No. 5822 — Signature — JULY 31, 2026 Renewal Date — APR. 13, 2026 Date — STATE OF CALIFORNIA

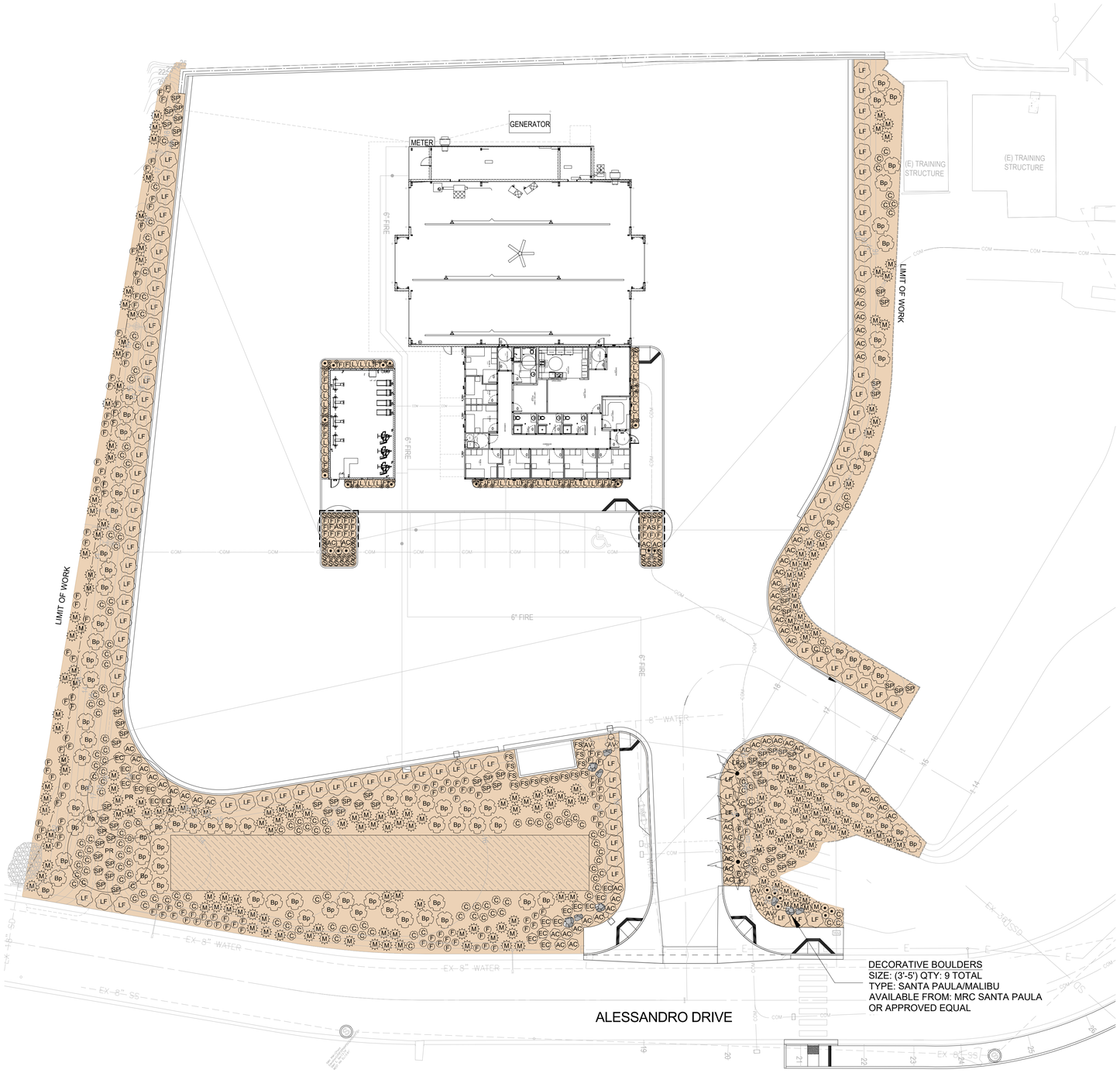

PLANT SCHEDULE

SYMBOL	BOTANICAL NAME	COMMON NAME	SIZE	WUCOLS	FORM	QTY	REMARKS
TREES							
AS	ACACIA STENOPHYLLA	SHOESTRING ACACIA	24" BOX	LOW	STANDARD	2	
PR	PLATANUS RACEMOSA	CALIFORNIA SYCAMORE	24" BOX	MODERATE	STANDARD	2	
	WASHINGTONIA ROBUSTA	MEXICAN FAN PALM	12' BTH	LOW		3	

SYMBOL	BOTANICAL NAME	COMMON NAME	CONT	WUCOLS	SPACING	QTY	REMARKS
SHRUBS							
●	ACHILLEA X 'MOONSHINE'	MOONSHINE YARROW	1 GAL	LOW		24	
AV	AGAVE VILMORINIANA	OCTOPUS AGAVE	5 GAL	LOW		5	
▲	ALOE STRIATA	CORAL ALOE	5 GAL	LOW		56	
AC	ARCTOSTAPHYLOS EDMUNDSII 'CARMEL SUR'	CARMEL SUR LITTLE SUR MANZANITA	1 GAL	LOW		56	
Bp	BACCHARIS PILULARIS 'PIGEON POINT'	PIGEON POINT COYOTE BRUSH	1 GAL	LOW		91	
C	CHONDROPETALUM TECTORUM 'EL CAMPO'	EL CAMPO CAPE RUSH	5 GAL	LOW		155	
EC	EPILOBIUM CANUM	CALIFORNIA FUCHSIA	5 GAL	VERY LOW		18	
FS	FEIJOA SELLOWIANA	PINEAPPLE GUAVA	5 GAL	LOW		14	
F	FESTUCA MAIREI	ATLAS FESCUE	1 GAL	LOW		179	
LF	LESSINGIA FILAGINIFOLIA 'SILVER CARPET'	SILVER CARPET ASTER	1 GAL	LOW		95	
L	LEUCADENDRON X 'RED GEM'	RED GEM CONEBUSH	5 GAL	LOW		27	
M	MUHLENBERGIA RIGENS	DEER GRASS	1 GAL	LOW		194	
SP	SALVIA X 'POZO BLUE'	POZO BLUE SAGE	5 GAL	VERY LOW		59	
S	SENECIO MANDRALISCAE	BLUE FINGERS	1 GAL	LOW		33	

SYMBOL	BOTANICAL NAME	COMMON NAME	CONT	WUCOLS	SPACING	QTY	REMARKS
GROUND COVERS							
	FRAGARIA CHILOENSIS	BEACH STRAWBERRY	FLAT	LOW	36" o.c.	349	

PLANTING NOTES:

1. A MINIMUM 3-INCH LAYER OF MULCH SHALL BE APPLIED ON ALL EXPOSED SOIL SURFACES OF PLANTING AREAS EXCEPT TURF AREAS, CREEPING OR ROOTING GROUNDCOVERS, OR DIRECT SEEDING APPLICATIONS WHERE MULCH IS CONTRAINDICATED.
2. MULCH:
   IN ALL SHRUB, TURF BLOCK, AND GROUND COVER AREAS, APPLY 3" DEEP ORGANIC RECYCLED CHIPPED WOOD IN DARK BROWN (SIZE SHALL NOT EXCEED 1-1/2" IN DIAMETER). CONTRACTOR SHALL SUBMIT SAMPLE TO LANDSCAPE ARCHITECT FOR APPROVAL.
3. ROOT BARRIERS:
   ROOT BARRIER BY CENTURY PRODUCTS. REFER TO PLANTING SPECIFICATIONS. SEE DETAIL SHEET LPD.01.
4. FOR SOILS LESS THAN 6% ORGANIC MATTER IN THE TOP 6 INCHES OF SOIL, COMPOST AT A RATE OF A MINIMUM OF FOUR CUBIC YARDS PER 1,000 SQUARE FEET OF PERMEABLE AREA SHALL BE INCORPORATED TO A DEPTH OF SIX INCHES INTO THE SOIL.
5. SOIL PREPARATION:
   (FOR BID PURPOSES ONLY) PENDING SOILS TEST AND RECOMMENDATIONS
   (SOIL PREPARATION PER 1,000 S.F.)
   - 4 CU. YARDS NITROLIZED WOOD SHAVINGS OR EQUAL
   - 100 LBS. GYPSUM
   - 150 LBS. GROW POWER PLUS

   REFER TO AGRONOMIC SOILS REPORT AND PLANTING SPECIFICATIONS FOR SOIL PREPARATION NOTES.

   CONTRACTOR TO COLLECT SOIL SAMPLE DURING CONSTRUCTION AND SUBMIT FOR SOIL REPORT.

6. INSTALLATION:
   - THE CONTRACTOR SHALL BE RESPONSIBLE FOR MAKING HIMSELF FAMILIAR WITH ALL UNDERGROUND UTILITIES AND STRUCTURES. THE CONTRACTOR SHALL TAKE SOLE RESPONSIBILITY FOR ANY COST INCURRED DUE TO DAMAGE OF SAID UTILITIES OR STRUCTURES.
   - DO NOT WILLFULLY PROCEED WITH PLANTING OPERATIONS AS DESIGNED WHEN IT IS OBVIOUS THAT UNKNOWN OBSTRUCTIONS AND/OR GRADE DIFFERENCES EXIST THAT MAY NOT HAVE BEEN KNOWN DURING THE DESIGN PROCESS. SUCH CONDITIONS SHALL BE IMMEDIATELY BROUGHT TO THE ATTENTION OF THE OWNER. THE CONTRACTOR SHALL ASSUME FULL RESPONSIBILITY FOR ALL NECESSARY REVISIONS DUE TO THE FAILURE TO GIVE SUCH NOTIFICATION PRIOR TO BEGINNING WORK.
   - THE CONTRACTOR SHALL BE RESPONSIBLE FOR ANY COORDINATION WITH SUBCONTRACTORS AS REQUIRED TO ACCOMPLISH PLANTING OPERATIONS.
   - REFER TO THE SPECIFICATIONS FOR PLANTING REQUIREMENTS, MATERIALS AND EXECUTION.
7. TREE STAKING:
   CONTRACTOR TO STAKE ALL TREES IN FIELD FOR APPROVAL PRIOR TO INSTALLATION.
8. MAINTENANCE:
   CONTRACTOR SHALL PROTECT AND MAINTAIN IN PLACE ALL EXISTING PLANT MATERIAL UNLESS SPECIFICALLY DIRECTED OTHERWISE BY OWNER/LANDSCAPE ARCHITECT. ALL PLANT MATERIAL REMOVED OR DAMAGED SHALL BE REPLACED WITH NEW PLANT MATERIAL OF EQUAL SIZE AT THE DISCRETION OF THE OWNER/LANDSCAPE ARCHITECT.
9. MAINTENANCE:
   CONTRACTOR SHALL BE RESPONSIBLE FOR WATERING AND MAINTAINING THE HEALTH OF ALL PLANT MATERIAL UNTIL MAINTENANCE TURNOVER TO THE CITY. AT TIME OF TURNOVER ANY PLANT MATERIAL THAT IS NOT IN A HEALTHY STATE, AS DETERMINED BY THE CITY, SHALL BE REPLACED TO THE SATISFACTION OF THE CITY.
10. ALL PLANTING AREAS ON SLOPES SHALL RECEIVE A COCONUT FIBER DOUBLE BET BLANKET COVER FROM ROLLS. FIBER SHALL BE AS MANUFACTURED BY NORTH AMERICAN GREEN #C125. INSTALL AND STAKE PER MANUFACTURER'S SPECIFICATIONS. INSTALL OVER IRRIGATION PIPES AND STAPLE AT 12" MAXIMUM FROM EITHER SIDE OF PIPE AT NORMAL INTERVALS DENOTED BY MANUFACTURER.

Scale: 1" = 20'-0"
0 5' 10' 20' 40'

N

REV.	DESCRIPTION	CK'D	APP	DATE
-	PROGRESS SUBMITTAL	-	-	04.13.26
-	PROGRESS SUBMITTAL	-	-	03.20.26
-	PROGRESS SUBMITTAL	-	-	06.13.25

PUBLIC WORKS DEPARTMENT ENGINEERING DIVISION

CITY OF SAN BUENAVENTURA

INTERIM FIRE STATION NO. 7

PLANTING PLAN

DRN. BY: RL DES. BY: RL CK'D. BY: RL

PRINCIPAL ENGINEER — DATE: 5 May 2026

CITY ENGINEER — DATE: 5/7/2026

SPEC. NUMBER 2025-010 PROJECT NO. FA11-1061

April 13, 2026 SHEET 91 OF 151 DWG.NO.2025-D-010

PLANS PREPARED BY:
DESIGN STUDIOS LANDSCAPE DEVELOPMENT LLC
88 N. Oak Street, Suite 1A
Ventura, California 93001
Phone 661-295-1970
Fax 661-295-1969

LICENSED LANDSCAPE ARCHITECT — ROBERTO GARCIA — No. 5145 — Signature — JULY 31, 2026 Renewal Date — APR. 13, 2026 Date — STATE OF CALIFORNIA

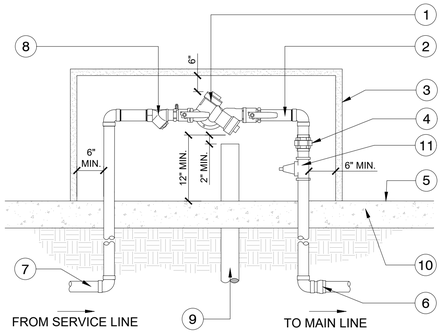

1. BACKFLOW PREVENTER UNIT WITH BALL VALVES, REFER TO IRRIGATION SCHEDULE
2. BRASS NIPPLES (TYP.)
3. VANDAL RESISTANT ENCLOSURE PER IRRIGATION SCHEDULE
4. BRASS UNION
5. FINISH SURFACE
6. PVC ADAPTER AND PIPE TO VALVES
7. TO POINT OF CONNECTION, ADAPT AS NECESSARY. ALL WORK SHALL CONFORM TO ALL APPLICABLE CODES
8. BRASS WYE STRAINER WITH 60 MESH SCREEN
9. 4" DRAIN PIPE. EXTEND DRAIN PIPE TO DISCHARG THROUGH CURB OR AS DIRECTED BY OWNER
10. 8" THICK CONCRETE BASE. EXTEND MIN.6" BEYOND SIDES OF ENCLOSURE
11. PRESSURE REGULATOR AS REQUIRED PER LEGEND

C BACKFLOW

3/4" = 1'-0"

P-FI-IRR-02

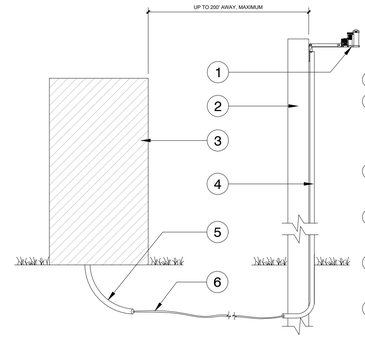

1. SOLAR SYNC SENSOR
2. SUITABLE POST, POLE, GUTTER MOUNT. MOUNT IN LOCATION THAT MAXIMIZES DIRECT SUNLIGHT. OPEN TO RAINFALL AND OUT OF SPRINKLER SPRAY PATTERN.
3. IRRIGATION CONTROLLER, REFER TO IRRIGATION SCHEDULE FOR MANUFACTURER AND MODEL.
4. CONDUIT FROM SOLAR SYNC SENSOR TO CONTROLLER OR TO A POINT 12" BELOW GRADE.
5. CONDUIT FOR VALVE CONTROL WIRE AND SOLAR SYNC COMMUNICATION WIRE.
6. COMMUNICATION WIRE, 18-2 (WIRE TYPE TO MEET INSTALLATION REQUIREMENTS), FROM MODULE TO SENSOR, MAXIMUM TOTAL WIRE DISTANCE, 200 FEET.

B SOLAR SYNC SENSOR

1" = 1'-0"

P-FI-IRR-03

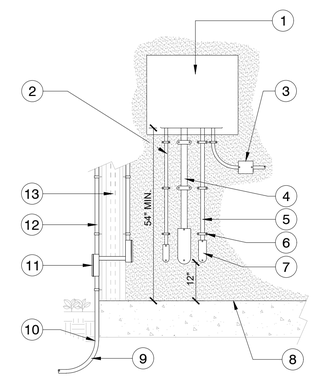

1. WALL-MOUNT CONTROLLER, REFER TO IRRIGATION SCHEDULE
2. 1" CONDUIT FOR RAIN SENSOR (IF RAINS SENSOR IS SPECIFIED)
3. 1" CONDUIT, SWEEP AND J-BOX FOR ELECTRICAL POWER SUPPLY, REFER TO ELECTRICAL ENGINEER'S PLANS
4. 2" CONDUIT FOR RCV WIRES, MCV WIRES AND FS WIRES
5. 1 1/4" CONDUIT FOR GROUND WIRE
6. CONDUIT SUPPORTS, 12" O.C. (TYP.)
7. JUNCTION BOX, SIZE PER CONDUIT (TYP.)
8. FLOOR OF BUILDING, REFER TO ARCHITECT'S PLANS
9. EXTEND CONDUIT A MIN. OF 12" FROM THE EDGE OF BUILDING
10. PVC CONDUIT AND SWEEP, SIZE TO MATCH INTERIOR
11. WEATHER PROOF STEEL JUNCTION BOX
12. 3/4" STEEL CONDUIT TO RAIN SENSOR
13. BUILDING WALL, REFER TO ARCHITECT'S PLANS

NOTES:

1. CONTROLLER ACCEPTS 120 VOLTS A.C.
2. MOUNT CONTROLLER LCD SCREEN AT EYE LEVEL, LOCATION TO BE APPROVED BY OWNER'S REPRESENTATIVE PRIOR TO INSTALL. CONTROLLER SHALL BE HARD-WIRED TO GROUNDED 110 VAC POWER SOURCE.
3. REFER TO MANUFACTURER'S INSTALLATION GUIDE FOR FURTHER INSTRUCTIONS.
4. DETAIL SHOWS FRONT VIEW OF CONTROLLER & A SIDE VIEW EXAMPLE OF A WALL PENETRATION. EACH CONDUIT REQUIRES A J-BOX ON THE INTERIOR & EXTERIOR OF THE BUILDING.

A WALL MOUNTED IRRIGATION CONTROLLER

1" = 1'-0"

P-FI-IRR-18

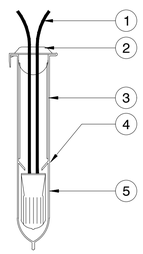

1. LOW VOLTAGE WIRES, 3 MAX.
2. WIRES PASS THROUGH GROOVES IN TUBE LID TO CLOSE
3. POLY TUBE PRE-FILLED WITH WATERPROOF GEL
4. LOCK TABS PREVENT WIRE REMOVAL ONCE CONNECTOR IS INSERTED
5. SCOTCHLOK ELECTRICAL SPRING CONNECTOR. WIRES SHALL BE PRE-STRIPPED OF 1/2" OF THE INSULATION PRIOR TO INSERTION INTO THE CONNECTOR. TWIST CONNECTOR ONTO WIRES TO SEAT FIRMLY.

   SCOTCHLOK CONNECTOR AND WIRES INSERTED INTO TUBE UNTIL THE CONNECTOR PASSES LOCK TABS

NOTES:

1. WIRE CONNECTOR SHALL BE A 3M DBY-6 DIRECT BURY SPLICE KIT (U.L. APPROVED)
2. KIT SHALL INCLUDE A SCOTCHLOK Y SPRING CONNECTOR, A POLYPROPYLENE TUBE AND A WATERPROOF SEALING GEL. TUBE SHALL BE SUPPLIED PREFILLED WITH GEL
3. DIRECT BURY SPLICE KIT SHALL BE USED TO ELECTRICALLY CONNECT 2-3 #14 OR 2 #12 PRE-STRIPPED COPPER WIRES. LARGER WIRES OR GREATER QUANTITIES OF WIRES SHALL REQUIRE A LARGER APPROVED WIRE CONNECTION

G WIRE CONNECTORS

3/4" = 1'-0"

P-FI-IRR-07

* 2" IN TURF /
1" IN PLANTER AREA

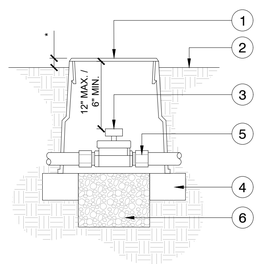

1. 10" ROUND PLASTIC VALVE BOX WITH LOCKABLE LID, INCISE 'BV' INTO LID
2. FINISH GRADE
3. BALL VALVE, REFER TO IRRIGATION SCHEDULE
4. BRICK (TYP.), 4 REQUIRED
5. PVC MALE ADAPTER
6. 8" MIN. LAYER OF PEA GRAVEL

F SHUT OFF VALVE

1 1/2" = 1'-0"

P-FI-IRR-06

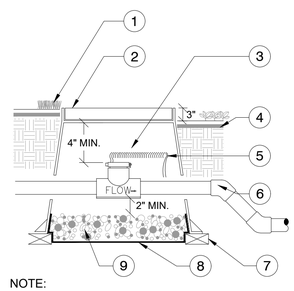

NOTE:

1. INSTALL FLOW SENSOR AS PER THE MANUFACTURER'S RECOMMENDATIONS, WIRE TO IRRIGATION CONTROLLER. USE 45° ELLS TO ACHIEVE MAINLINE DEPTH ON THE DOWN-STREAM SIDE OF THE FLOW SENSOR.

1. FINISHED GRADE IN TURF AREAS
2. PLASTIC RECTANGULAR VALVE BOX WITH BOLT DOWN COVER, USE STAINLESS STEEL BOLT, NUT, AND WASHER. BOX TO BE PLACED AT RIGHT ANGLE TO HARDSCAPE EDGE. HEAT BRAND "FS" ONTO LID.
3. FLOW SENSOR, SEE LEGEND FOR SPEC.
4. FINISHED GRADE IN SHRUB AREAS
5. 24" WIRE LOOP
6. PVC MAINLINE PIPE PER SPEC.
7. BRICK SUPPORTS
8. LANDSCAPE FABRIC
9. 3/4" ROCK, (2) CUBIC FT.

E FLOW SENSOR

1" = 1"

P-FI-IRR-05

* 2" IN SHRUB AREA / 1" IN TURF AREA

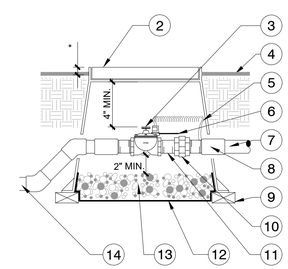

NOTES:

1. USE 45° ELLS TO ACHIEVE MAINLINE DEPTH FROM UP-STREAM SIDE OF THE MASTER VALVE.

1. FINISHED GRADE IN TURF AREAS
2. PLASTIC RECTANGULAR VALVE BOX WITH BOLT DOWN COVER, USE STAINLESS STEEL BOLT, NUT, AND WASHER. BOX TO BE PLACED AT RIGHT ANGLE TO HARDSCAPE EDGE. HEAT BRAND "MV" ONTO LID
3. MASTER CONTROL VALVE, SEE LEGEND FOR SPEC
4. FINISHED GRADE
5. 24" WIRE LOOP WITH WATER PROOF WIRE CONNECTORS. USE WHITE AND RED COLOR WIRES WITH STRIPE
6. VALVE ID TAGS
7. PRESSURE MAINLINE TO FLOW SENSOR
8. PVC SCH 40 FEMALE ADAPTER, (2) REQUIRED
9. BRICK SUPPORTS
11. SCH. 80 PVC NIPPLE
12. LANDSCAPE FABRIC
13. 3/4" ROCK, (2) CUBIC FT.
14. PVC MAINLINE PIPE FROM BACKFLOW PER SPECS.

D MASTER VALVE

NTS

P-FI-IRR-04

* 2" IN TURF AREA /
1" IN SHRUB AREA

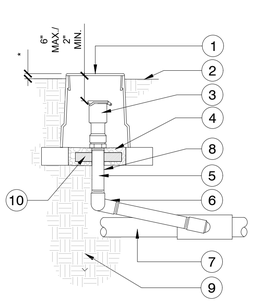

1. 10" ROUND PLASTIC VALVE BOX
2. FINISH GRADE
3. QUICK COUPLING VALVE WITH LOCKABLE CAP, REFER TO IRRIGATION SCHEDULE
4. 3/4" GRAVEL, 1 CUBIC FOOT
5. SCHEDULE 80 NIPPLE
6. SCHEDULE 40 SWING JOINT
7. PVC MAINLINE
8. STAINLESS STEEL SCREW CLAMP
9. #6 X 18" REBAR
10. 1"x8"x8" REDWOOD DEADMAN WITH HOLE DRILLED FOR NIPPLE

I QUICK COUPLER

1 1/2" = 1'-0"

P-FI-IRR-09

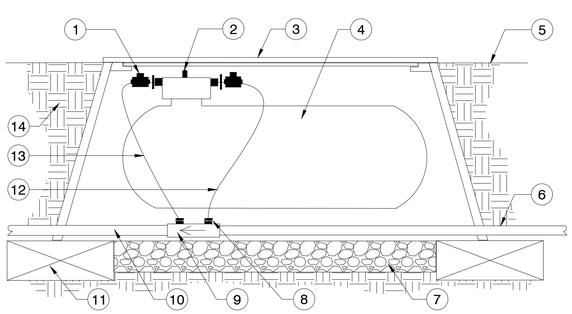

1. EZ-FLO SHUT OFF VALVE
2. PROPORTIONING CAP WITH FEED ADJUSTMENT KNOB
3. JUMBO VALVE BOX AND COVER, HEAT BRAND "EZ" INTO LID
4. EZ-FLO FERTILIZING SYSTEM. REFER TO IRRIGATION SCHEDULE FOR MODEL
5. FINISH GRADE
6. PVC MAINLINE
7. PEA GRAVEL (1 CU. FT.)
8. 1/4" TUBING CLAMP - BOTH THE GREEN AND BLUE COUPLING TUBING CONNECTIONS
9. EZ-FLO CBV-XXX OR CBVT-XXX BALL COUPLING VALVE - LINE SIZE. INSTALL ACCORDING TO WATER FLOW DIRECTION ARROW
10. PVC MAINLINE TO VALVE MANIFOLD
11. BRICK SUPPORT (4) PER BOX
12. WATER IN-CONNECT BLACK TUBE TO BLUE CONNECTIONS ON PROPORTIONING CAP AND COUPLING
13. FERTILIZER OUT-CONNECT CLEAR TUBE TO GREEN CONNECTIONS ON PROPORTIONING CAP AND COUPLING
14. APPROVED BACKFILL

H IRRIGATION FERTILIZER INJECTOR

1 1/2" = 1'-0"

P-FI-IRR-08

REV.	DESCRIPTION	CK'D	APP	DATE
-	PROGRESS SUBMITTAL	-	-	04.13.26
-	PROGRESS SUBMITTAL	-	-	03.20.26
-	PROGRESS SUBMITTAL	-	-	06.13.25

PUBLIC WORKS DEPARTMENT ENGINEERING DIVISION

CITY OF SAN BUENAVENTURA

INTERIM FIRE STATION NO. 7

IRRIGATION DETAILS

DRN. BY: RL DES. BY: RL CK'D. BY: RL

PRINCIPAL ENGINEER — 5 May 2026 DATE

CITY ENGINEER — 5/7/2026 DATE

SPEC. NUMBER 2025-010 PROJECT NO. FA11-1061

April 13, 2026 SHEET 92 OF 151 DWG.NO.2025-D-010

PLANS PREPARED BY:

DESIGN STUDIOS
LANDSCAPE ARCHITECTURE LLC

88 N. Oak Street, Suite 1A
Ventura, California 93001

Phone 661-295-1970
Fax 661-295-1969

LICENSED LANDSCAPE ARCHITECT — ROBERTO LOPEZ — No. 5127 — Signature — JULY 31, 2026 Renewal Date — APR. 13, 2026 Date — STATE OF CALIFORNIA

* 2" IN TURF /
1" IN PLANTER AREA

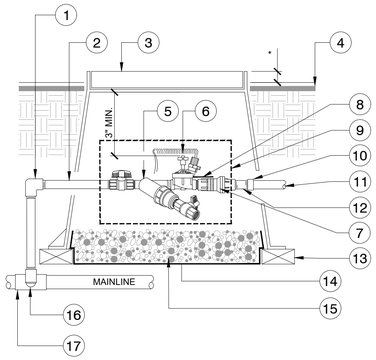

1. PVC SCH 40 ELL
2. PVC SCH 80 NIPPLE (TYPICAL, LENGTH AS REQUIRED)
3. PLASTIC RECTANGULAR VALVE BOX WITH BOLT DOWN COVER, USE STAINLESS BOLT, NUT, AND WASHER. BOX TO BE PLACED AT RIGHT ANGLE TO HARDSCAPE EDGE. HEAT BRAND 'RCV' AND CONTROL STATION # ONTO LID.
4. FINISHED GRADE IN SHRUB AREAS
5. FILTER
6. R.C.V.
7. PRESSURE REG.
8. CHRISTY'S VALVE ID TAG
9. CONTROL ZONE KIT, REFER TO IRRIGATION SCHEDULE FOR MANUFACTURER AND MODEL.
10. PVC SCH 40 MALE ADAPTER
11. PVC LATERAL TO DRIP SYSTEM
12. PVC SCH 80 NIPPLE
13. BRICK SUPPORTS (4 REQ.)
14. LANDSCAPE FABRIC
15. 3/4" ROCK, 2 CUBIC FT. 3" MINIMUM DEPTH
16. PVC SCH 80 NIPPLE (2-INCH LENGTH, HIDDEN) AND PVC SCH 40 ELL
17. PVC SCH 40 TEE OR ELL

C DRIP REMOTE CONTROL VALVE

1" = 1"

P-FI-IRR-12

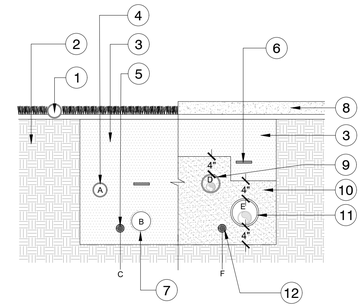

DEPTH CHART	A	B	C	D	E	F
SIZES 6" LARGER	-	36"	36"	36"	36"	36"
SIZES 3" AND 4"	18"	24"	24"	30"	36"	36"
SIZES 3/4" TO 2 1/2"	12"	18"	18"	24"	24"	24"
WIRING	-	-	BESIDE MAIN	-	-	BESIDE MAIN

1. ON-GRADE LATERAL PIPE, WHEN SPECIFIED
2. UNDISTURBED SOIL
3. COMPACTED BACKFILL
4. LATERAL LINE
5. 2-WIRE CABLE WITHIN ELECTRICAL CONDUIT
6. MAINLINE TRACER TAPE OR AWG #6 BARE COPPER TRACER WIRE, REFER TO LEGEND FOR SPECIFICATION
7. MAINLINE, REFER TO LEGEND FOR SPECIFICATION
8. ROADWAY / PAVING
9. LATERAL LINE SLEEVE
10. SAND BACKFILL; FILL TO 4" ABOVE, AND 4" BELOW SLEEVE
11. MAINLINE SLEEVE
12. CONTROL WIRE SLEEVE FOR CONVENTIONAL WIRE OR 2-WIRE CABLE

NOTES:

1. ALL PIPE SLEEVE UNDER ASPHALT OR VEHICULAR TRAFFIC PAVING SHALL HAVE 4 INCHES OF SURROUNDING BACKFILL MATERIAL, CONSISTING OF CLEAN SAND, ON ALL SIDES OF PIPE.
2. ALL MAINLINE PIPE 3" AND LARGER SHALL HAVE 4 INCHES OF SURROUNDING BACKFILL MATERIAL, CONSISTING OF CLEAN SAND, ON ALL SIDES OF PIPE.
3. SLEEVE UNDER PEDESTRIAN WALKWAYS SHALL EQUAL DEPTHS INDICATED IN COLUMNS A, B, & C.
4. LINES MUST HAVE IN. CLEARANCE OF 4" FROM EACH OTHER & 12" FROM OTHER TRADES.
5. RUN CONVENTIONAL WIRE BESIDE MAINLINE AT LOCATION SHOWN, TAPE & BUNDLE @ 10' O.C.
6. TIE A 24" LOOP IN ALL WIRING / CABLE AT CHANGES IN DIRECTION, WHEN NOT INSTALLED WITHIN CONDUIT.
7. ALL SLEEVES MUST BE 2X THE DIAMETER OF THE PIPE WITHIN.
8. ALL SLEEVE ENDS MUST BE SEALED WITH FOAM SEALANT INSIDE PIPE TO MINIMIZE DEBRIS INTRUSION.
9. ALL SLEEVES MUST EXTEND 12" MIN. DISTANCE PAST EDGE OF ROADWAY, CURB, OR SIDEWALK.
10. CONTRACTOR MUST ADJUST MAINLINE AROUND ALL STREET LIGHT LOCATIONS, LIGHT BOLLARDS, TREE ROOT BALLS (MIN. 5' CLEARANCE) AND OTHER OBSTACLES.

A PIPE / WIRE / SLEEVE INSTALLATION

N.T.S.

1. TREE, RE: L8.00 SERIES
2. TREE ROOTBALL
3. EDGE OF TREE PLANT PIT. SET BUBBLER AT EDGE OF PLANTING PIT
4. TREE BUBBLER, RE: DETAIL E / LID.02
5. TREE ROOT WATERING BUBBLER, RE: DETAIL F / LID.02
6. FINISH GRADE

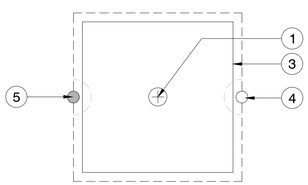

PLAN VIEW

1. MULCH
2. FINISH GRADE
3. GRATED CAP
4. BUBBLER AS SPECIFIED
5. CHECK VALVE
6. ROOTZONE WATERING SYSTEM, REFER TO IRRIGATION SCHEDULE FOR MANUFACTURER AND MODEL
7. SWING JOINT
8. LATERAL TEE OR ELL
9. LATERAL PIPE
10. ROOT INTRUSION BARRIER
11. FILL WITH PEA GRAVEL

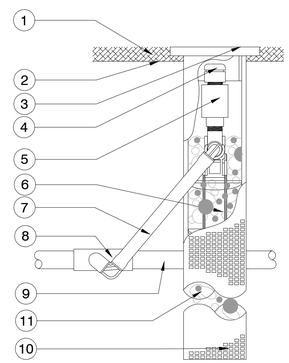

NOTES:

1. BUBBLER TO BE PLACED ROOTBALL ADJACENT AND ON OPPOSITE SIDES OF ROOTBALL

F TREE ROOT WATERING BUBBLER

3" = 1'-0"

P-FI-IRR-14

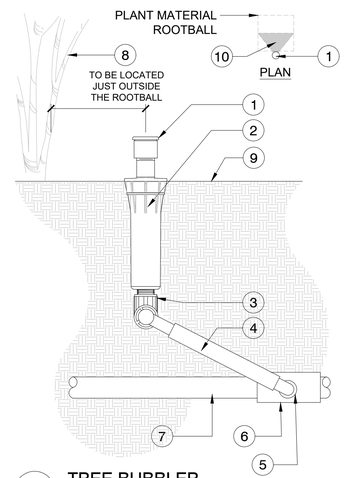

1. BUBBLER, REFER TO IRRIGATION SCHEDULE
2. POP-SPRAY BODY, REFER TO IRRIGATION SCHEDULE
3. 1/2" 90° ELBOW
4. 1/2" SWING ASSEMBLY
5. 1/2" MALE NPT INLET
6. PVC SCH. 40 TEE OR ELL
7. LATERAL PIPE
8. PLANT MATERIAL
9. FINISH GRADE
10. BUBBLER SPRAY PATTERN, DIRECTED TOWARDS PLANT ROOTBALL

E TREE BUBBLER

6" = 1'-0"

P-FI-IRR-15

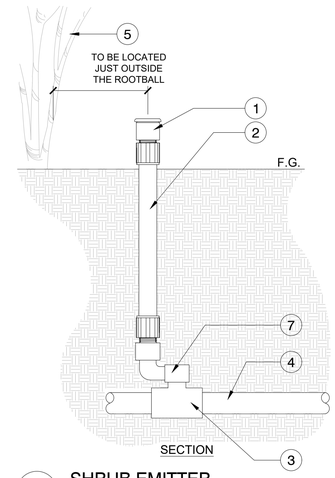

1. SALCO EMITTER, RE: IRRIGATION SCHEDULE
2. SALCO 1/2" ADAPTER
3. PVC SCH. 40 TEE
4. LATERAL PIPE
5. PLANT MATERIAL
6. BUBBLER SPRAY PATTERN, DIRECTED TOWARDS PLANT ROOTBALL
7. (2) MARLEX FITTING FOR ADJUSTING EMITTER LOCATION

D SHRUB EMITTER

6" = 1'-0"

P-FI-IRR-13

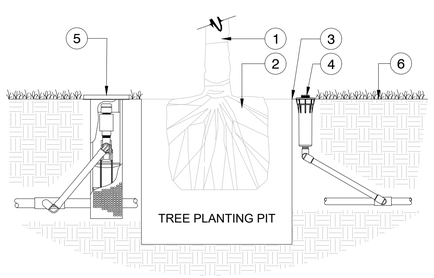

H TREE BUBBLER IRRIGATION LAYOUT

N.T.S.

P-FI-IRR-17

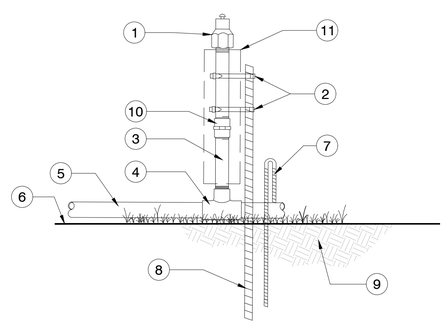

1. NOZZLE, REFER TO IRRIGATION SCHEDULE
2. HOSE CLAMP X2
3. 1/2" OR 3/4" UVR RISER (LENGTH AS REQUIRED)
4. UVR TEE
5. UVR LATERAL LINE
6. FINISH GRADE
7. 18" J-HOOK @ 10' O.C.
8. REBAR STAKE
9. COMPACTED SUBGRADE
10. CHECK VALVE, HUNTER HCV CHECK VALVE HC-50F-50F, OR APPROVED EQUAL
11. POP-UP BODY, WHERE OCCURS. USE RAINBIRD PROS-12-PRS 40 CV OR EQUAL.

G FIXED SPRAY HEAD

NTS

REV.	DESCRIPTION	CK'D	APP	DATE
-	PROGRESS SUBMITTAL	-	-	04.13.26
-	PROGRESS SUBMITTAL	-	-	03.20.26
-	PROGRESS SUBMITTAL	-	-	06.13.25

PUBLIC WORKS DEPARTMENT ENGINEERING DIVISION

CITY OF SAN BUENAVENTURA

INTERIM FIRE STATION NO. 7

IRRIGATION DETAILS

DRN. BY: RL DES. BY: RL CK'D. BY: RL

PRINCIPAL ENGINEER — DATE: 5 May 2026

CITY ENGINEER — DATE: 5/7/2026

SPEC. NUMBER 2025-010 PROJECT NO. FA11-1061

April 13, 2026 SHEET 93 OF 151 DWG.NO.2025-D-010

PLANS PREPARED BY:

DESIGN STUDIOS
LANDSCAPE ARCHITECTURE, LLC

88 N. Oak Street, Suite 1A
Ventura, California 93001

Phone 661-295-1970
Fax 661-295-1969

LICENSED LANDSCAPE ARCHITECT — STATE OF CALIFORNIA
Signature
JULY 31, 2026
Renewal Date
APR. 13, 2026
Date

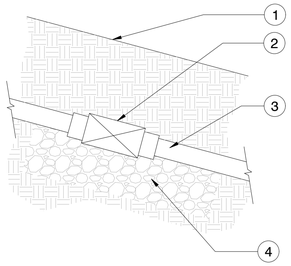

1. FINISH GRADE
2. SWING/SPRING CHECK VALVE
3. SCH 40 PVC LATERAL LINE
4. 6" DEEP 3/4" CRUSHED AGGREGATE BASE

NOTE:
INSTALL A (SLIP X SLIP) SPRING CHECK VALVE FOR FLOWS DOWNHILL FROM RCV. INSTALL A (SLIP X SLIP) SWING CHECK VALVE FOR FLOWS UPHILL OF RCV. INSTALL PER MANUFACTURER'S SPECIFICATIONS

B INLINE CHECK VALVE

N.T.S. P-FI-IRR-21

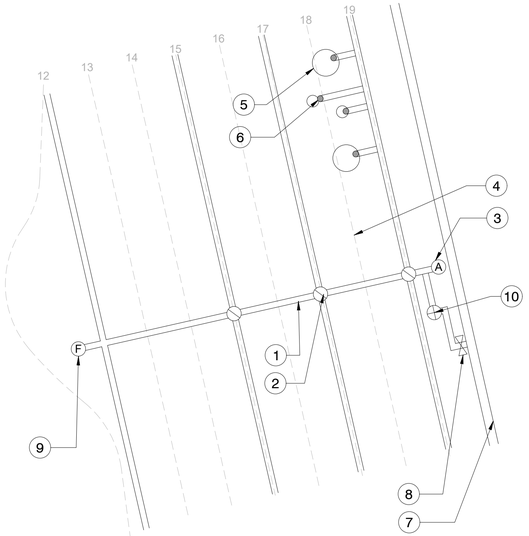

NOTES:

1. SLOPE 3:1 & GREATER SHALL RECEIVE UVR PIPE AND TYPICAL SLOPE LAYOUT TREATMENT COMMUNICATED IN THE DETAIL
2. INSTALL A (SLIP X SLIP) SPRING CHECK VALVE FOR FLOWS DOWNHILL FROM RCV. INSTALL A (SLIP X SLIP) SWING CHECK VALVE FOR FLOWS UPHILL OF RCV. INSTALL PER MANUFACTURER'S SPECIFICATIONS.
3. CHECK VALVES TO BE LOCATED ON LATERALS FOR EVERY 10 FEET OF ELEVATION DIFFERENCE ALONG THE LINE.

1. LATERAL LINE
2. SWING/SPRING CHECK VALVE.
3. AIR RELIEF VALVE AT HIGHEST ELEVATION OF DRIP ZONE
4. CONTOUR LINE FOR REFERENCE ONLY
5. PLANT ROOTBALL
6. SHRUB EMITTER PER IRRIGATION SCHEDULE
7. IRRIGATION MAINLINE
8. GATE VALVE ON MAINLINE
9. FLUSH VALVE AT LOWEST ELEVATION
10. REMOTE CONTROL VALVE (RCV)

A SHRUB BUBBLER IRRIGATION LAYOUT ON SLOPE

N.T.S. P-FI-IRR-20

REV.	DESCRIPTION	CK'D	APP	DATE
-	PROGRESS SUBMITTAL	-	-	04.13.26
-	PROGRESS SUBMITTAL	-	-	03.20.26
-	PROGRESS SUBMITTAL	-	-	06.13.25

PUBLIC WORKS DEPARTMENT ENGINEERING DIVISION

CITY OF SAN BUENAVENTURA

INTERIM FIRE STATION NO. 7

IRRIGATION DETAILS

DRN. BY: RL DES. BY: RL CK'D. BY: RL

PRINCIPAL ENGINEER 5 May 2026 DATE

CITY ENGINEER 5/7/2026 DATE

SPEC. NUMBER 2025-010 PROJECT NO. FA11-1061

April 13, 2026 SHEET 94 OF 151 DWG.NO.2025-D-010

PLANS PREPARED BY:

DESIGN STUDIOS LANDSCAPE ENVIRONMENT LLC

88 N. Oak Street, Suite 1A
Ventura, California 93001

Phone 661-295-1970
Fax 661-295-1969

LICENSED LANDSCAPE ARCHITECT ROBERTO GALLEGO No. 4 6 3 3 Signature JULY 31, 2026 Renewal Date APR. 13, 2026 Date STATE OF CALIFORNIA

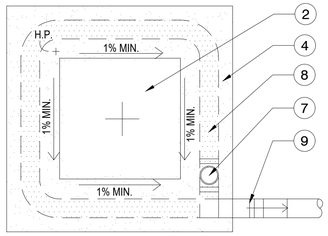

PLAN

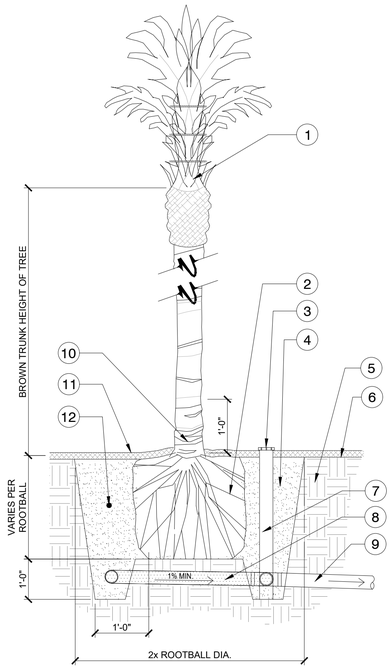

SECTION

1. PALM FRONDS - TIED AND CROPPED PRIOR TO SHIPPING
2. PALM ROOTBALL - PLANT CROWN AT ORIGINAL GRADE OF ROOTBALL
3. 4" DIA. 'BLACK' GRATE CAP 2" ABOVE FINISH GRADE
4. BACKFILL - 100% CLEAN WASHED SAND PER HOTICULTURAL SOILS REPORT. FIRM BOTTOM SAND LAYER BY WATER JETTING PRIOR TO SETTING TREE
5. UNDISTURBED SOIL
6. FINISH GRADE
7. 4" DIA. SOLID HDPE INSPECTION TUBE EXTEND VERTICALLY ABOVE FINISH GRADE
8. 4" DIA. PERFORATED HDPE DRAIN PIPE WITH FILTER SOCK, PERFORATED HOLES SHALL BE FACING DOWN
9. CONNECT PIPE TO STORM DRAIN SYSTEM. REFER TO CIVIL ENGINEER'S PLANS FOR STORM DRAIN CONNECTION AND INVERT. VERIFY INVERT AND ROOTBALL SET PRIOR TO INSTALLATION. IF CONNECTION IS NOT POSSIBLE, PROVIDE 12" DIA. X 4'-0" DEEP AUGER HOLE. INSTALL 4" DIA. ASTM D3034, SDR-35 PERFORATED PIPE AND BACKFILL WITH 3/4" AGGREGATE AND FILTER FABRIC SOCK.
10. AERIAL ROOTS AT BASE OF PALM TRUNK - MAXIMUM OF 1' EXPOSED ABOVE ROOT CROWN
11. MULCH LAYER PER PLANTING SPECIFICATIONS (KEEP CLEAR OF TRUNK)
12. PLANT FERTILIZER TABLETS PER AGRONOMIC SOILS REPORT RECOMMENDATIONS

NOTES:

1. LIQUID VITAMIN B1 TO BE MIXED IN WITH BACKFILL (APPLY PER MANUFACTURER RECOMMENDATIONS)
2. PALM TRUNK SHALL BE STRAIGHT AND VERTICAL (PLUMB)
3. REMNANT PETIOLE BOOTS SHALL REMAIN ON PALM TRUNK
4. CONTRACTOR SHALL EXTEND SAND TO SURFACE AND SETTLE IN WITH WATER. DO NOT CAP WITH NATIVE SOIL OR PLANTER MIX
5. REFER TO PLANTING SPECIFICATIONS FOR QUANTITY OF DAYS FRONDS SHALL REMAIN TIED AND WHEN THEY SHOULD BE UNTIED

G PALM PLANTING

1/2" = 1'-0"

P-FI-PLA-42

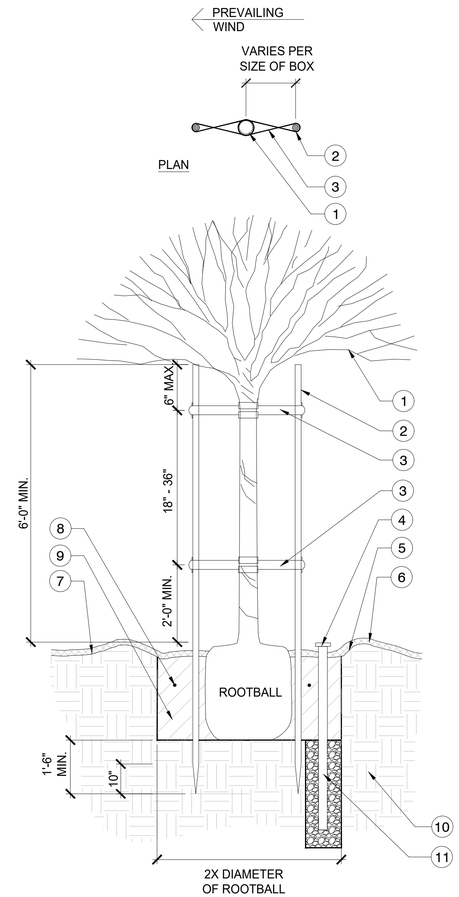

1. TREE PLANTING PER PLAN (CENTER IN PIT)
2. LODGEPOLE PINE WOOD STAKE, 3" DIA. X 12' (UP TO 36" BOX) WITH A TEN-INCH TAPERED DRIVING POINT AND CHAMFERED TOP, UNTREATED, NATURAL WOOD COLOR. PLACE STAKES PARALLEL TO PREVAILING WIND OR AS DIRECTED BY LANDSCAPE ARCHITECT. VERIFY WITH LANDSCAPE ARCHITECT PRIOR TO ADJUSTING.
3. CINCH TIES - 32" BLACK CINCH TYPE, TWO DOUBLE CINCH TIES PER TREE (4 CINCH TIES TOTAL)
4. 4" NDS BLACK ROUND GRATE (PART NO. 11) 1" ABOVE FINISH GRADE
5. 3" HIGH WATERING BASIN. SHALL BE NO LARGER THAN ROOTBALL. RAKE OUT AS DIRECTED.
6. MULCH LAYER PER PLANTING SPECIFICATIONS (KEEP CLEAR OF TRUNK)
7. FINISH GRADE
8. PLANT FERTILIZER TABLETS PER AGRONOMIC SOILS REPORT RECOMMENDATIONS
9. AMENDED BACKFILL PER AGRONOMIC SOILS REPORT RECOMMENDATIONS
10. UNDISTURBED SOIL - SCARIFY SIDES AND BOTTOM OF PIT
11. 12" DIA. X 4'-0" DEEP AUGER HOLE. INSTALL 4" DIA. ASTM D3034, SDR-35 PVC PERFORATED PIPE AND BACKFILL WITH 3/4" AGGREGATE AND FILTER FABRIC SOCK.

NOTES

1. TOP OF ROOTBALL SHALL BE MAINTAINED ABOVE ADJACENT FINISH GRADE - 1" ABOVE FOR 5-15 GAL, 3" ABOVE FOR 24" BOX AND LARGER. SLOPE FOR DRAINAGE.
2. PLANT PIT SHALL BE A MINIMUM OF 18" LARGER THAN BOX SIZE ON ALL SIDES AND NO DEEPER THAN BOX DEPTH.
3. FOOT TAMP BACKFILL LIGHTLY IN 6"-10" LIFTS.
4. MAINTAIN A MIN. 2'-6" DIAMETER BARK MULCH AREA AROUND TRUNK IN TURF AND REMOVE WATERING BASIN.
5. INSTALL 'ARBOR GUARD' TREE TRUNK PROTECTORS ON ALL TREES IN TURF AREAS

A TREE PLANTING & DOUBLE STAKING

1/2" = 1'-0"

P-FI-PLA-03

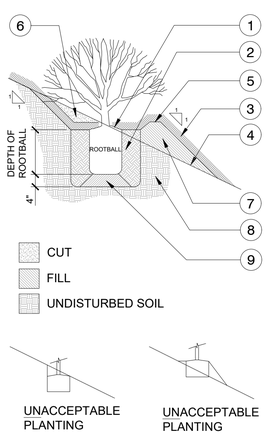

1. SET ROOT BALL 2" ABOVE FINISH GRADE
2. AMENDED BACKFILL SOIL PER AGRONOMIC SOILS REPORT RECOMMENDATIONS
3. MULCH LAYER PER PLANTING SPECIFICATIONS
4. EXISTING SLOPE
5. WATER BASIN
6. CUT SLOPE
7. COMPACTED TOPSOIL, REFER TO DETAIL
8. UNDISTURBED SOIL
9. TAMP AND COMPACT BACKFILL UNDER ROOTBALL TO MINIMIZE SETTLING

D SHRUB PIT (ON SLOPE)

N.T.S.

P-FI-PLA-10

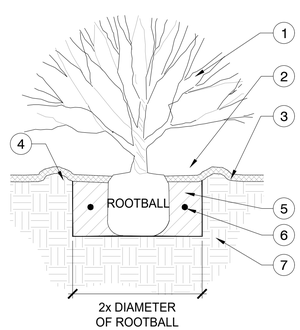

NOTES

1. SET TOP OF ROOTBALL 1/2" ABOVE FINISH GRADE AND SLOPE FOR DRAINAGE

1. CONTAINER PLANT (CENTER IN PIT)
2. 3" HIGH WATERING BASIN. SHALL BE NO LARGER THAN ROOTBALL. RAKE OUT AS DIRECTED.
3. MULCH LAYER PER PLANTING SPECIFICATIONS (KEEP CLEAR OF TRUNK)
4. FINISH GRADE
5. AMENDED BACKFILL SOIL PER AGRONOMIC SOILS REPORT RECOMMENDATIONS
6. PLANT FERTILIZER TABLETS PER AGRONOMIC SOILS REPORT RECOMMENDATIONS
7. UNDISTURBED SOIL

C SHRUB & GROUNDCOVER PLANTING

1" = 1'-0"

P-FI-PLA-06

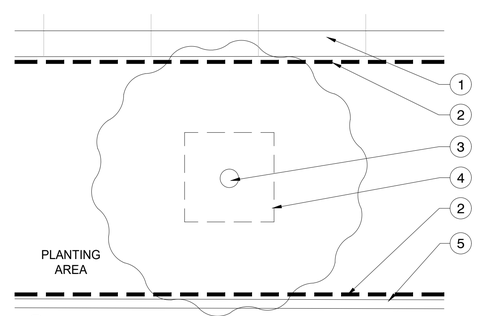

1. SIDEWALK (TYPICAL)
2. ROOT BARRIER, EXTEND 12' ON EITHER SIDE OF TREE ALONG CURB OR EDGE OF PAVING. REFER TO PLANS FOR LOCATION.
3. TREE, PER PLAN
4. TREE ROOTBALL, SIZE VARIES
5. BACK OF CURB (TYPICAL)

B TYPICAL ROOT BARRIER CONDITION

1" = 1'-0"

P-FI-PLA-04

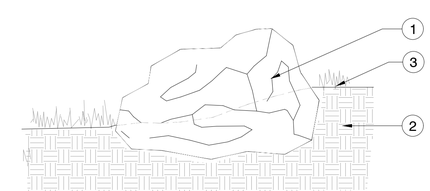

1. BOULDER, REFER TO CONSTRUCTION LEGEND FOR SIZE AND TYPE
2. COMPACTED SUB-GRADE
3. ADJACENT FINISHED GRADE. REFER TO CONSTRUCTION PLAN

NOTES:

1. BOULDERS TO BE FREE OF SCARS AND MARKS FROM GRADING AND MOVING EQUIPMENT.
2. BURY BOULDERS TO 1/4 OF ITS HEIGHT, SEE PLANS FOR PLACEMENT OF BOULDERS.
3. CONTRACTOR TO COORDINATE WITH LANDSCAPE ARCHITECT TO BE ON SITE FOR PLACEMENT.

F BOULDERS

N.T.S.

P-FI-PLA-34

REV.	DESCRIPTION	CK'D	APP	DATE
-	PROGRESS SUBMITTAL	-	-	04.13.26
-	PROGRESS SUBMITTAL	-	-	03.20.26
-	PROGRESS SUBMITTAL	-	-	06.13.25

PUBLIC WORKS DEPARTMENT ENGINEERING DIVISION

CITY OF SAN BUENAVENTURA

INTERIM FIRE STATION NO. 7

PLANTING DETAILS

DRN. BY: RL DES. BY: RL CK'D. BY: RL

PRINCIPAL ENGINEER — DATE: 5 May 2026

CITY ENGINEER — DATE: 5/7/2026

SPEC. NUMBER 2025-010 PROJECT NO. FA11-1061

April 13, 2026 SHEET 95 OF 151 DWG.NO.2025-D-010

PLANS PREPARED BY:

DESIGN STUDIOS LANDSCAPE DEVELOPMENT LLC

88 N. Oak Street, Suite 1A
Ventura, California 93001

Phone 661-295-1970
Fax 661-295-1969

LICENSED LANDSCAPE ARCHITECT — ROBERTO LAMAS — No. 5178 — Signature — JULY 31, 2026 Renewal Date — APR. 13, 2026 Date — STATE OF CALIFORNIA

ELECTRICAL ABBREVIATIONS

A, AMP	AMPERE
A/C	AIR CONDITIONING
AC	ALTERNATING CURRENT
AF	AMPS–FRAME
AIC	AVAILABLE INTERRUPTING CAPACITY
AM	AMMETER
AT	AMPS–TRIP
ATS	AUTOMATIC TRANSFER SWITCH
AUTO	AUTOMATIC
AWG	AMERICAN WIRE GAUGE
AWT	AUTOMATIC WELL TESTER
BC	BARE COPPER
BLDG	BUILDING
BPS	BOOSTER PUMP STATION
BSC	BARE STRANDED COPPER
C	CONDUIT
CB	CIRCUIT BREAKER
CKT	CIRCUIT
CLG	CEILING
CO	CONDUIT ONLY
CP	CONTROL PANEL
CPT	CONTROL POWER TRANSFORMER
CT	CURRENT TRANSFORMER
CTL	CONTROL
CU	COPPER
DEMO	DEMOLITION
DET	DETAIL
DIA	DIAMETER
DISC	DISCONNECT
DISTR	DISTRIBUTION
DIV	DIVISION
DN	DOWN
DPS	PUMP DISCHARGE PRESSURE SWITCH
DS	DOOR SWITCH
DWG	DRAWING
E.F.	EXHAUST FAN
EL	ELECTRICAL
EL, ELEV	ELEVATION
EMERG	EMERGENCY
EMT	ELECTRICAL METALLIC TUBING
EQUIP	EQUIPMENT
ETM	ELAPSED TIME METER
EXIST, E	EXISTING
F	FUTURE
FA	FIRE ALARM
FIN	FINISH
FLA	FULL LOAD AMPERES
FT	FEET
FVNR	FULL VOLTAGE NON–REVERSING
FVR	FULL VOLTAGE STARTER
GA	GAUGE
GALV	GALVANIZED
G, GND	GROUND
GFI	GROUND FAULT INTERRUPTER
GFT	GROUND FAULT TRIP
GIW	GROUND FAULT INTERRUPTER, WEATHERPROOF
HF	HIGH FLOW
HID	HIGH INTENSITY DISCHARGE (LAMP)
HP	HORSEPOWER
HOA	HAND–OFF–AUTOMATIC
HPF	HIGH POWER FACTOR
HPS	HIGH PRESSURE SODIUM (LAMP)
HV	HIGH VOLTAGE
HZ	HERTZ
IC	ISOLATION CONTACTOR
IOR	I/O RACK
IR	INFRARED
ISC	AVAILABLE SHORT CIRCUIT CURRENT
ISR	INTRINSICALLY SAFE RELAY
JB	JUNCTION BOX
KCM	THOUSAND CIRCULAR MILS (OR MCM)
KV	KILOVOLT
KVA	KILOVOLT AMPERE
KVAR	KILOVOLT AMPERE REACTIVE
KW	KILOWATT
LCL	LONG CONTINUOUS LOAD
LCR	LINE CURRENT RELAY
LOR	LOCAL–OFF–REMOTE SWITCH
LOS	LOCK–OUT–STOP PUSHBUTTON
LP	LIGHTING PANEL
LR	LEVEL RELAY
LRA	LOCKED ROTOR AMPS
LRP	LINEAR ROD PUMP
LS	LIMIT SWITCH
LTG	LIGHTING
LTS	LIGHT SWITCH (PRESSURE SWITCH TYPE)
LV	LOW VOLTAGE
LVR	LINE VOLTAGE RELAY
MA	MILLIAMPERE
MCC	MOTOR CONTROL CENTER
MCP	MOTOR CIRCUIT PROTECTOR
MF	MEDIUM FLOW
MH	MANHOLE
MIC	MANUFACTURER'S INTERCONNECTING CABLE
MMI	MAN MACHINE INTERFACE
MOV	MOTOR OPERATED VALVE

ELECTRICAL ABBREVIATIONS

MS	MAGNETIC STARTER
MTD	MOUNTED
MV	MEDIUM VOLTAGE
N	NEW
NC	NORMALLY CLOSED
NF	NON FUSED
N.I.C.	NOT IN CONTRACT
NL	NIGHT LIGHT
NO	NORMALLY OPEN
N/P	NAMEPLATE
NTS	NOT TO SCALE
OC	OPEN/CLOSE (STATUS)
P	POLE
PB	PULLBOX
PF	POWER FACTOR
PFR	POWER FAIL RELAY
PH, O	PHASE PIPING AND INSTRUMENTATION DIAGRAM
PLC	PROGRAMMABLE LOGIC CONTROLLER
PNL	PANEL
PR	PAIR
PT	POTENTIAL TRANSFORMER
PVC	POLYVINYL CHLORIDE (DUCT)
PWR	POWER
R	RELAY
RECEPT	RECEPTACLE
RGS	RIGID GALVANIZED STEEL
RMC	RIGID METAL CONDUIT
RM	ROOM
RMS	ROOT MEAN SQUARE
RTC	REMOTE TERMINAL CABINET
RTU	REMOTE TERMINAL UNIT
RVAT	REDUCED VOLTAGE AUTO–TRANSFORMER
RVSS	REDUCED VOLTAGE SOLID STATE
SC	SHORTING CONTACTOR
SCADA	SUPERVISED CONTROL AND DATA ACQUISITION
SCCR	SHORT CIRCUIT CURRENT RATING
SCE	SOUTHERN CALIFORNIA EDISON
SHT	SHEET
SPC	SPACE
SPS	SUCTION PRESSURE SWITCH
SS	SOFT STARTER
SST	STAINLESS STEEL
STP	SHIELDED TWISTED PAIR
SV	SOLENOID VALVE
SW	SWITCH
SWBD	SWITCHBOARD
SYMM	SYMMETRICAL
T	TIMER (SWITCH)
TD	TIME DELAY
TEL	TELEPHONE
TERM	TERMINAL
TEMP	TEMPERATURE
THWN	THERMAL PLASTIC, HEAT RESISTANT, WATERPROOF, NYLON COATED
TP	TWISTED PAIR
TRANS	TRANSFORMER
TRANSF	TRANSFORMER
TS	TEMPERATURE SWITCH
TSP	TWISTED SHIELDED PAIR
TST	TWISTED SHIELDED TRIAD
TVSS	TRANSIENT VOLTAGE SURGE SUPPRESSOR
TYP	TYPICAL
U.G.	UNDERGROUND
UNO	UNLESS NOTED OTHERWISE
UON	UNLESS OTHERWISE NOTED
UPS	UNINTERRUPTIBLE POWER SUPPLY
UTP	UNSHIELDED TWISTED PAIR
V	VOLT
VA	VOLT AMPERE
VAC	VOLTS AC
VCLS	VALVE CLOSED LIMIT SWITCH
VD	VOLTAGE DROP
VDC	VOLTS DC
VFD	VARIABLE FREQUENCY DRIVE
VM	VOLTMETER
VSH	VIBRATION SWITCH, HIGH (WARNING)
VSHH	VIBRATION SWITCH, HIGH (SHUTDOWN)
W	WIRE, WATTS
WCR	WITHSTAND AND CLOSING RATING
WP	WEATHERPROOF
WT	WATERTIGHT
WTH	WEATHER STATION
XFMR	TRANSFORMER

ELECTRICAL LEGEND

EXISTING	PROPOSED	
		UTILITY POLE
		CONDUIT RUN EXPOSED
		CONDUIT RUN UNDERGROUND OR UNDERFLOOR
12KV	12KV	12KV OVERHEAD WIRES
480V	480V	480V OVERHEAD WIRES
		BARE COPPER GROUND WIRE UNDERGROUND OR UNDERFLOOR
		CONDUIT TURNED UP
		CONDUIT TURNED DOWN
		LIQUIDTIGHT FLEXIBLE METAL CONDUIT
	LP–7	HOMERUN TO PANEL "LP", CIRCUIT "7"
	1"C–3#10	INDICATES CONDUIT SIZE, NUMBER AND SIZE OF CONDUCTORS
		1"C–3#12, 1#12 GND.
	A / 100	LIGHTING FIXTURE IDENTIFICATION SYMBOL, UPPER HALF OF SYMBOL INDICATES TYPE OF FIXTURE AND LOWER HALF INDICATES FIXTURE WATTAGE (INCLUDING BALLAST)
		LIGHTING FIXTURE
		WALL MOUNTED LIGHTING FIXTURE
	$a	SINGLE POLE TUMBLER SWITCH, 20A, 120–277V, WALL MOUNTED AT +48" OR AS NOTED SUBSCRIPT "a" IDENTIFIES CIRCUIT CONTROLLED
	J	JUNCTION BOX
		20A–125V, 2 POLE, 3 WIRE, NEMA 5–20R, DUPLEX RECEPTACLE, MOUNTED AT 15" ABOVE FLOOR (UNO)
	GFI	20A–125V, 2 POLE 3 WIRE, NEMA 5–20R GROUND FAULT INTERRUPTER. DUPLEX RECEPTACLE MOUNTED AT 15" ABOVE FLOOR (UNO)
		DATA RECEPTACLE
		FLOOR MOUNTED DUPLEX RECEPTACLE WITH DATA OUTLET COMBO
	3 OR 3	MOTOR WITH ADJACENT J–BOX, NUMBER INDICATES HORSEPOWER RATING
	100AF 100AT 3P	CIRCUIT BREAKER, 100 AMP FRAME, 100 AMP TRIP, 3 POLE
	100AF	FUSE, 100A
	OR T	TRANSFORMER, DESCRIPTION AND RATING AS SHOWN ON DRAWING
	300/5	CURRENT TRANSFORMER, 300A TO 5A RATIO
		POTENTIAL TRANSFORMER (PT) OR CONTROL POWER TRANSFORMER (CPT)
		MAGNETIC MOTOR STARTER, 3 POLE, NUMBER DENOTES SIZE
	VFD	VARIABLE FREQUENCY DRIVE
		GROUND ROD, 3/4" DIA X 10'–0" LONG, COPPER–CLAD STEEL
		GROUND TEST WELL, 3/4" DIA X 10'–0" LONG, COPPER–CLAD STEEL AND GROUND BOX
		GROUND CONNECTION
		DISCONNECT SWITCH – UNFUSED HORSEPOWER RATED
	F 20AF 2P OR 300A 3P	DISCONNECT SWITCH – FUSED, HORSEPOWER RATED, FUSE SIZE INDICATED BY ADJACENT NUMBERS
	15kV, 30A	CUT OUT SWITCH WITH FUSE LINK
		START/STOP PUSHBUTTON STATION
	PM	POWER MONITOR
	(F)	FUTURE

CONTROLS LEGEND

	N.C. PUSHBUTTON
	N.O. PUSHBUTTON
	SELECTOR SWITCH
OL'S	N.C. MOTOR OVERLOAD RELAY CONTACTS
	NORMALLY OPEN CONTACT (N.O.) STATUS WITH RELAY DE–ENERGIZED
	NORMALLY OPEN CONTACT (N.C.) STATUS WITH RELAY DE–ENERGIZED
	N.O. CONTACT ON PRESSURED SWITCH
	N.O. LIMIT SWITCH
	N.C. LIMIT SWITCH
	N.O. LEVEL SWITCH
	TIMED CONTACT, CLOSES AFTER TIME DELAY
	TIMED CONTACT, OPENS AFTER TIME DELAY
	TEMPERATURE SWITCH
	FLOW SWITCH
	SOLENOID
A	PILOT LIGHT LETTER INDICATED COLOR (AMBER)
M1	MOTOR STARTER COIL
	TERMINAL OR DEVICE LOCATED IN "MCC" MOTOR STARTER COMPARTMENT
	DEVICE LOCATED IN THE FIELD
	TERMINAL OR DEVICE LOCATED IN TELEMETRY CABINET
CR	CONTROL RELAY

EXISTING CONDITIONS NOTES

1. ANY INFORMATION SHOWN ON THE PLANS FOR EXISTING CONDITIONS WAS PRIMARILY GAINED FROM "AS BUILT" DRAWINGS AND/OR LIMITED FIELD INVESTIGATION. BEFORE CONSTRUCTION, THE CONTRACTOR SHALL VERIFY EXISTING CONDITIONS AND MAKE ALLOWANCE FOR VARIATIONS FROM THAT SHOWN. CONTRACTOR SHALL ALSO FIELD VERIFY AND TAKE ALL DUE PRECAUTIONARY MEANS TO PROTECT ALL UNDERGROUND LINES, WIRING AND STRUCTURES REGARDLESS IF SHOWN OR NOT ON THE DRAWINGS.
2. PRIOR TO CONSTRUCTION, CONTRACTOR SHALL POTHOLE AND VERIFY LOCATION AND DEPTH OF EXISTING UTILITIES AND NOTIFY ENGINEER OF ANY DISCREPANCIES.
3. THE CONTRACTOR SHALL NOTIFY THE ENGINEER IMMEDIATELY OF THE DISCOVERY OF ANY UTILITY OR ANY UNDERGROUND LINES, WIRING AND STRUCTURES THAT WAS OMITTED FROM THE PLANS, INCORRECTLY SHOWN OR NOT PROPERLY MARKED. IF THE UTILITY DOES NOT PROVIDE LOCATION INFORMATION OR MARKING SERVICES IN THE FIELD, THE CONTRACTOR SHALL IMMEDIATELY NOTIFY THE ENGINEER.
4. OVERHEAD UTILITIES ARE NOT SHOWN IN ALL INSTANCES. CONTRACTOR SHALL USE DUE CARE WHEN WORKING NEAR OR UNDER SAID UTILITIES AND SHALL PROTECT THEM IN PLACE.
5. THE CONTRACTOR SHALL NOT INTERRUPT THE SERVICE FUNCTION OF ANY UTILITY OR FIELD PRODUCTION EQUIPMENT, DISTURB THE SUPPORT BASE, OR MODIFY ANY FACILITY WITHOUT AUTHORITY FROM THE UTILITY OWNER AND/OR THE CITY.
6. EXISTING PIPELINES/UTILITIES THAT CROSS NEW SYSTEM PIPING OR SIMILAR EXCAVATIONS REQUIRED TO CONSTRUCT THE PIPING, SHALL BE PROTECTED IN PLACE, UNLESS OTHERWISE NOTED. ALL EXISTING PIPELINES/UTILITIES SHALL BE SUPPORTED ACROSS THE EXCAVATION DURING CONSTRUCTION.
7. THE CONTRACTOR SHALL IMMEDIATELY NOTIFY THE UTILITY OWNER AND THE CITY IF ANY UTILITY OR UNDERGROUND LINES, WIRING AND STRUCTURES ARE DISTURBED OR DAMAGED DURING THE COURSE OF THE WORK. THE CONTRACTOR SHALL BEAR THE COSTS OF REPAIR OR REPLACEMENT OF ANY MARKED UTILITY WHERE DAMAGE WAS CAUSED BY THE CONTRACTOR'S ACTIVITIES.

SECTION AND DETAIL IDENTIFICATION SYSTEM

SECTION LETTER OR DETAIL NUMBER

SHEET ON WHICH SECTION OR DETAIL APPEARS OR IS TAKEN

NOTICE TO CONTRACTOR

1. THE LOCATIONS OF EXISTING UNDERGROUND UTILITIES ARE SHOWN IN AN APPROXIMATE WAY ONLY AND HAVE NOT BEEN INDEPENDENTLY VERIFIED BY THE OWNER OR ITS REPRESENTATIVE. THE CONTRACTOR SHALL DETERMINE THE EXACT LOCATION OF ALL EXISTING UTILITIES BEFORE COMMENCING WORK, AND AGREES TO BE FULLY RESPONSIBLE FOR ANY AND ALL DAMAGES WHICH MIGHT BE OCCASIONED BY THE CONTRACTOR'S FAILURE TO EXACTLY LOCATE AND PRESERVE ANY AND ALL UNDERGROUND UTILITIES.
2. IT IS THE CONTRACTOR'S RESPONSIBILITY TO CONTACT UNDERGROUND SERVICE ALERT (PHONE NO. 811) 48 HOURS IN ADVANCE OF ANY EXCAVATION FOR THE MARK–OUT OF THE LOCATION OF UTILITIES AND OBTAIN A DIG ALERT IDENTIFICATION NUMBER PRIOR TO COMMENCEMENT OF WORK.
3. CONTRACTOR IS REQUIRED TO TAKE PRECAUTIONARY MEASURES TO PROTECT THE UTILITY LINES SHOWN HEREON AND ANY OTHER EXISTING LINES NOT OF RECORD OR NOT SHOWN ON THESE PLANS.

GENERAL NOTES

1. ALL WORK SHALL CONFORM TO AND BE PERFORMED IN ACCORDANCE WITH CODES, STANDARDS, AND ORDINANCES AS SET FORTH BY THE AUTHORITIES HAVING JURISDICTION AND THEIR LATEST ADOPTED EDITIONS (IN EFFECT AT TIME OF BUILDING PERMIT APPLICATION) OF THE FOLLOWING PUBLICATIONS:
   A. CALIFORNIA CODE OF REGULATIONS TITLE 24: INCLUDES NATIONAL ELECTRICAL CODE AND INTERNATIONAL FIRE CODE, INTERNATIONAL BUILDING CODE, ETC. WITH CALIFORNIA AND OTHER LOCAL AMENDMENTS AS APPLICABLE.
   B. AMERICANS WITH DISABILITIES ACT (ADA).
2. THE ELECTRICAL CONTRACTOR IS RESPONSIBLE TO MAINTAIN ALL EQUIPMENT IN A SAFE AND RESPONSIBLE MANNER. KEEP DEAD FRONT EQUIPMENT IN PLACE WHILE EQUIPMENT IS ENERGIZED. CONDUCT ALL CONSTRUCTION OPERATIONS IN A SAFE MANNER FOR EMPLOYEES AS WELL AS OTHER WORKPERSONS OR ANYONE VISITING THE JOB SITE. PROVIDE BARRIERS, FLAGS, TAPE, ETC. AS REQUIRED FOR SAFETY. THE CONTRACTOR SHALL HOLD ALL PARTIES HARMLESS OF NEGLIGENT SAFETY PRACTICES, WHICH MAY CAUSE INJURY TO OTHERS ON OR NEAR THE JOB SITE.
3. FIRE RATED ASSEMBLIES SHALL MAINTAIN RATINGS AS SPECIFIED IN THE CALIFORNIA BUILDING CODE CHAPTER 7. CONTRACTOR SHALL PROVIDE AND INSTALL PHYSICAL ENCLOSURE AROUND FIXTURES, PANELS, ETC. AS REQUIRED. ALL ASSEMBLIES TO BE PENETRATED SHALL BE INSTALLED WITH APPLICABLE THROUGH–PENETRATION FIRESTOP SYSTEM AS DETERMINED BY UL CLASSIFICATION. BEFORE CONSTRUCTION, VERIFY AND COMPLY WITH REQUIREMENTS OF LOCAL AUTHORITY HAVING JURISDICTION.
4. BEFORE ROUGH–IN, VERIFY ALL MOUNTING HEIGHTS AND EXACT LOCATIONS FOR ALL EQUIPMENT, ELECTRICAL CONNECTIONS, STUB–UPS, RECEPTACLES, ETC. WITH OWNER.
5. LABEL PANELS, CABINETS, BACKBOARDS, MAIN DEVICES, SAFETY SWITCHES, CONTACTORS AND OTHER SPECIFICALLY DESIGNATED EQUIPMENT SHOWN ON PLANS. USE ENGRAVED LAMINATED PLASTIC NAMEPLATES ATTACHED BY SCREWS OR RIVETS. FOR FEEDERS, NEATLY AND INDELIBLY LABEL CONDUIT DESTINATIONS ON BOTH VISIBLE ENDS OF CONDUIT RUNS WHERE CONDUITS TERMINATE AT DESIGNATED ENCLOSURES, STRUCTURES OR EQUIPMENT (INCLUDING PULL AND SPLICE BOXES).
6. ALL MECHANICAL AND ELECTRICAL EQUIPMENT SHALL BE ANCHORED OR BRACED TO MEET THE HORIZONTAL AND VERTICAL FORCES PRESCRIBED IN THE LATEST EDITION OF THE CBC AND ASCE.
7. ANY DEMOLITION WORK SHOWN WAS PREPARED FOR THE CONVENIENCE OF THE CONTRACTOR. THE ENGINEER DOES NOT REPRESENT THAT ALL ITEMS WHICH REQUIRE DEMOLITION HAVE BEEN SHOWN.
8. IT SHALL BE THE RESPONSIBILITY OF THE CONTRACTOR TO CAREFULLY EXAMINE THE SITE AND THE CONTRACT DOCUMENTS AND TO PERFORM ALL DEMOLITION AND RECONSTRUCTION WHICH MAY BE REQUIRED FOR THE PROPER EXECUTION AND COMPLETION OF THE WORK.
9. INFORMATION FOR EXISTING CONDITIONS WAS PRIMARILY GAINED FROM "AS BUILT" DRAWINGS AND/OR LIMITED FIELD INVESTIGATION. BEFORE BID, VISIT SITE TO VERIFY EXISTING CONDITIONS AND MAKE ALLOWANCE FOR VARIATIONS FROM THAT SHOWN.
10. CLOSELY COORDINATE OUTAGE AND FACILITY DISRUPTION TIME WITH THE OWNER. MINIMUM 72–HOUR NOTICE IS REQUIRED BEFORE ANY CIRCUIT SHUTDOWN OR DISRUPTION OF FACILITY PERSONNEL FUNCTIONING.
11. ALL SINGLE CONDUCTORS SHALL BE COPPER WITH TYPE XHHW–2 INSULATION UNLESS OTHERWISE NOTED.
12. ALL UNDERGROUND CONDUITS SHALL HAVE A MINIMUM COVER OF 24".
13. ALL SWITCHES, CIRCUIT BREAKERS AND OTHER EQUIPMENT, AS SPECIFIED, SHALL HAVE TERMINATION PROVISIONS LISTED AND IDENTIFIED FOR USE WITH 75°C CONDUCTORS, AND ALL FEEDER CONDUCTORS, AND CONDUITS, ARE SIZED BASED ON USE OF 75°C COPPER WIRES TYPE XHHW–2.
14. ALL EQUIPMENT SHALL HAVE AN APPROVED TESTING LABORATORY LABEL ATTACHED [UL, CSA, ETC.] (CEC 110–2).
15. PROVIDE GROUND WIRE IN ALL CONDUITS CONTAINING POWER OR LIGHTING CIRCUITS.
16. ALL ABOVE GROUND CONDUIT SHALL BE THREADED RIGID METAL CONDUIT.
17. ALL UNDERGROUND CONDUIT SHALL BE SCHEDULE 40 PVC, WITH PVC COATED RGS BENDS, ELBOWS AND TURN–UPS, UNLESS OTHERWISE NOTED.
18. ALL CONDUIT SHALL BE MINIMUM 1" UNLESS NOTED OTHERWISE.
19. WHERE POWER AND INSTRUMENTATION CONDUITS OCCUPY THE SAME TRENCH, PROVIDE A MINIMUM OF 12" OF SEPARATION.
20. TOTAL NUMBER OF CONDUIT BENDS SHALL NOT EXCEED 270 DEGREES OR NO MORE THAN (3) 90 DEGREE BENDS.

GROUNDING NOTES

1. ALL GROUNDING CONDUCTORS SHALL BE INSTALLED A MINIMUM 30 INCHES BELOW FINISHED GRADE UNLESS OTHERWISE NOTED.
2. MAIN GROUND CONDUCTOR SHALL BE #4/0 STRANDED COPPER AND TAP TO EQUIPMENT SHALL BE #2 STRANDED COPPER, UNLESS OTHERWISE NOTED.
3. UNDERGROUND CONNECTION SHALL BE COMPRESSION OR EXOTHERMIC CONNECTION.
4. FRAMES OF ALL MOTORS SHALL BE BONDED TO THE GROUND GRID.
5. ABOVE–GRADE GROUND WIRE SHALL BE INSULATED COPPER CONDUCTOR.

REGISTERED PROFESSIONAL ENGINEER
PONNESSA BABU PEERAMSETTY
NO. 21736
ELECTRICAL
STATE OF CALIFORNIA
04/07/26

Cannon
60 S. California Street, Suite 401
Ventura, CA 93001
P 805.503.4590 F 805.544.3863

THESE DRAWINGS ARE INSTRUMENTS OF SERVICE AND ARE THE PROPERTY OF CANNON. ALL DESIGNS AND INFORMATION ON THESE DRAWINGS ARE FOR USE OF THE SPECIFIED PROJECT AND SHALL NOT BE USED OTHERWISE OR REPRODUCED WITHOUT THE EXPRESSED WRITTEN PERMISSION OF CANNON.

REV.	DESCRIPTION	CK'D	APP	DATE
2	ISSUED FOR BID	DP/DR	-	04/07/26
1	ISSUED FOR REVIEW	DP/DR	-	12/19/25
0	ISSUED FOR BID	AM/DR	-	06/11/25

PUBLIC WORKS DEPARTMENT ENGINEERING DIVISION
CITY OF SAN BUENAVENTURA

FIRE STATION NO. 7
ELECTRICAL SYMBOLS & GENERAL NOTES

DRN. BY: AM | DES. BY: AM | CK'D. BY: AM/DR

PRINCIPAL ENGINEER — DATE: 5 May 2026

CITY ENGINEER — DATE: 5/7/2026

SPEC. NUMBER 2025-010 | PROJECT NUMBER FA11-1061

June 11, 2025 | SHEET 96 OF151 | DWG. NO. 2025-D-010

F:\proj\2023\230644\4 Production and Drafting\Const Dwgs\E\Electrical Drawings\E230644N0001.dwg 4-06-26 03:58:11 PM MichelleA

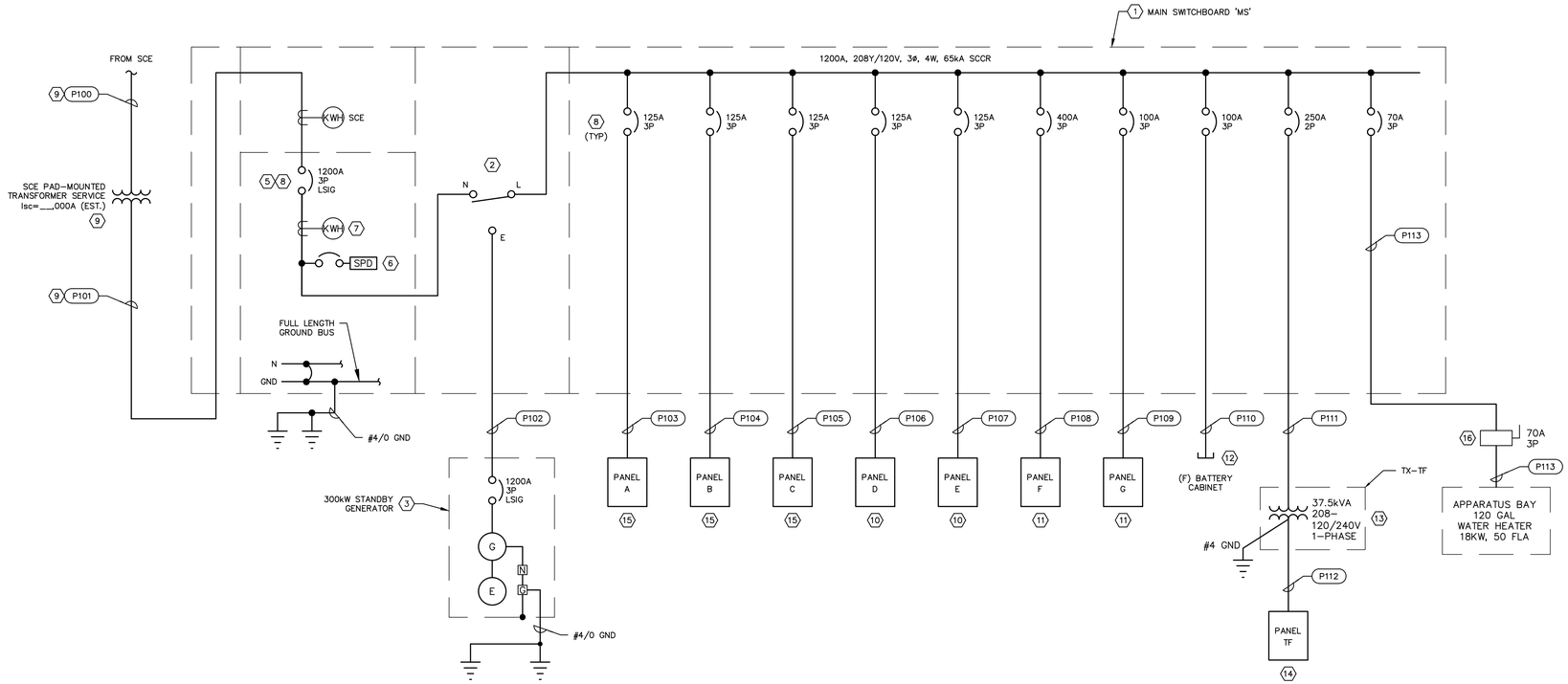

SINGLE LINE DIAGRAM

SCALE: NO SCALE

GENERAL NOTES:

1. SEE ELECTRICAL SYMBOLS AND GENERAL NOTES ON SHEET 87.
2. SEE CONDUIT AND CABLE SCHEDULE ON SHEET 100.
3. ELECTRICAL EQUIPMENT DIMENSIONS ARE BASED ON PRELIMINARY LAYOUTS PROVIDED BY THE VENDORS. FINAL DIMENSIONS SHALL BE PROVIDED BY THE MANUFACTURERS VIA SHOP DRAWING SUBMITTALS AND CONFIRMED BY THE CONTRACTOR PRIOR TO INSTALLATION.
4. SCE SCOPE OF WORK IS SHOWN FOR BIDDING PURPOSES ONLY. CONTRACTOR SHALL CONFIRM ALL SCE WORK WITH SCE PLANNER/INSPECTOR, PLANS AND STANDARDS.

CONSTRUCTION NOTES:

1. MAIN SWITCHBOARD 'MS', 1200A, 208Y/120V, 3-PHASE, 4-WIRE, COPPER BUSSING, RATED AT 65,000 SCCR IN NEMA 3R ENCLOSURE, MANUFACTURED BY SQUARE-D. MAIN SWITCHBOARD SHALL HAVE AN INTERNAL CPT FOR SPACE HEATERS (AS REQUIRED), LIGHTING, AND CONVENIENCE RECEPTACLE(S).
2. AUTOMATIC DELAYED-TRANSITION TRANSFER SWITCH, 1200A, 208V, 4-POLE WITH SWITCHED NEUTRAL, 65kA WCR, INSTALLED IN MAIN SWITCHBOARD 'MS', ASCO 7000 SERIES. TRANSFER SWITCH SHALL HAVE PRE-TRANSFER RELAY SIGNAL.
3. 300kW DIESEL STANDBY GENERATOR, CATERPILLAR C9, 208Y/120V, 3-PHASE, 4-WIRE WITH NEUTRAL BONDED AT GENERATOR, 60Hz, WITH 1200A, 3P, LSIG, 100% RATED, UL LISTED, MAIN AND SECONDARY/LOAD BANK CIRCUIT BREAKERS, AND DOUBLE-WALLED, SUB-BASE FUEL TANK SIZED TO OPERATE FOR 24 HOURS (MINIMUM) AT FULL LOAD. GENERATOR SHALL BE SIZED FOR CONNECTED LOAD (AS SHOWN) WITH A MAXIMUM VOLTAGE DIP OF 25%. GENERATOR SHALL BE HOUSED IN A WEATHERPROOF, SOUND-ATTENUATED (LEVEL 2) ENCLOSURE. THE ENCLOSURE SHALL MITIGATE SOUND TO A LEVEL OF 71dBA AT 23 FEET. ENCLOSURE COLOR SHALL BE PER CITY PREFERENCE. SUPPLIER SHALL PROVIDE SIZING STUDY RESULTS TO OWNER AND ENGINEER TO VERIFY THE GENERATOR TO BE SUPPLIED CAN START AND MAINTAIN THE AFOREMENTIONED LOADS. GENERATOR SHALL BE CATERPILLAR, NO SUBSTITUTIONS, OWNER FURNISHED, INSTALLED BY CONTRACTOR.
4. SEE STRUCTURAL DRAWINGS FOR EQUIPMENT FOUNDATION DESIGN AND DETAILS.
5. MAIN CIRCUIT BREAKER SHALL BE 1200A FRAME WITH 1200A TRIP, 208V, 3-POLE, 65kA INTERRUPTING CAPACITY, LSIG ELECTRONIC TRIP UNIT WITH ARC-FLASH REDUCTION MAINTENANCE SWITCH (ARMS), FIXED MOUNTED, SQUARE D POWERPACT PG, OR APPROVED EQUAL.
6. SURGE PROTECTIVE DEVICE (SPD) RATED AT 240kA, 208Y/120V, 3-PHASE, 4-WIRE, STANDARD WITH SURGE COUNTER AND CIRCUIT BREAKER OR FUSIBLE DISCONNECT, SQUARE-D, OR APPROVED EQUAL.
7. POWER METER FOR POWER MONITORING AND ENERGY AND POWER MEASUREMENT. METER SHALL HAVE REMOTE (DOOR-MOUNTED) DISPLAY, BASIC INSTRUMENTATION, THD, ALARMING, DUAL ETHERNET PORTS, SQUARE-D/SCHNEIDER ELECTRIC PM5563, COMM EXPANSION CARD AND DISPLAY, OR APPROVED EQUAL.
8. CIRCUIT BREAKERS SHALL BE RATED FOR MIN. 65,000 AIC AND HAVE PROVISIONS FOR LOCKOUT-TAGOUT.
9. ALL SCE WORK SHALL BE COORDINATED WITH SCE. SERVICE REQUEST #4044496 PROJECT #3166536 PRODUCT #TD2489602 – NEW METER & SERVICE. SCE PROJECT MANAGER STEVEN WALL, PHONE #805-654-7118, STEVEN.WALL@SCE.COM
10. PANELBOARD IS TO BE PROVIDED BY GLOBAL MODULAR INC. AS PART OF LIVING QUARTER OR GYM MODULAR BUILDING PACKAGE. SEE PANEL SCHEDULE ON GLOBAL MODULAR INC. DRAWINGS FOR DETAILS. CONTRACTOR SHALL PROVIDE FEEDER AND CONNECTION TO PANELBOARD, AS SHOWN AND PER PLANS.
11. CONTRACTOR SHALL PROVIDE AND INSTALL PANELBOARD, SEE PANEL SCHEDULE ON SHEET 89 FOR RATINGS AND DETAILS. PANELBOARDS SHALL HAVE BOLT-ON BRANCH CIRCUIT BREAKERS, COPPER BUSSING, FULL NEUTRAL, NEMA 1 ENCLOSURE FOR INDOOR INSTALLATIONS AND NEMA 3R FOR OUTDOOR INSTALLATIONS, SQUARE-D, OR APPROVED EQUAL.
12. STUB-UP, CAP, AND TAG SPARE CONDUIT FOR FUTURE BATTERY CABINET. SEE PLANS FOR LOCATION AND DETAILS.
13. LOW-VOLTAGE TRANSFORMER, DRY-TYPE, 37.5kVA, 208V PRIMARY TO 120/240V SECONDARY, SINGLE-PHASE, 60Hz, ENERGY-EFFICIENT, COPPER WINDINGS, NEMA 3R OUTDOOR-RATED ENCLOSURE, SQUARE-D, OR APPROVED EQUAL.
14. (E) FIRE TRAINING FACILITIES TEMPORARY SERVICE PANEL SHALL BE DEMOLISHED AS PART OF THIS SCOPE AND IN CONJUNCTION WITH SCE TEMPORARY SERVICE REMOVAL. DEMOLITION SHALL BE COORDINATED WITH SCE AND THE CITY. CONTRACTOR SHALL PROVIDE AND INSTALL (N) PANELBOARD "TF" TO REPLACE (E) TEMPORARY SERVICE PANEL LOAD CENTER SECTION "IN KIND". SEE PANEL SCHEDULE ON SHEET 89 FOR RATINGS AND BRANCH CIRCUIT DETAILS. ALL LOAD CONNECTIONS TO (N) PANEL "TF" SHALL BE COORDINATED WITH THE CITY AND ARE NOT PART OF THIS ENGINEERING SCOPE.
15. CONTRACTOR SHALL ENSURE BONDING JUMPERS ARE NOT INSTALLED BETWEEN THE NEUTRAL AND GROUND INSIDE THE PANEL BOARDS (DISTRIBUTION PANELS) EXCEPT FOR THE PANEL BOARD THAT IS FED FROM A SEPARATELY DERIVED SYSTEM.
16. 70A, 240VAC, 3-POLE, 3-WIRE, NON-FUSIBLE, NEMA 1, HEAVY DUTY SAFETY SWITCH, SQUARE-D, EATON, OR APPROVED EQUAL.

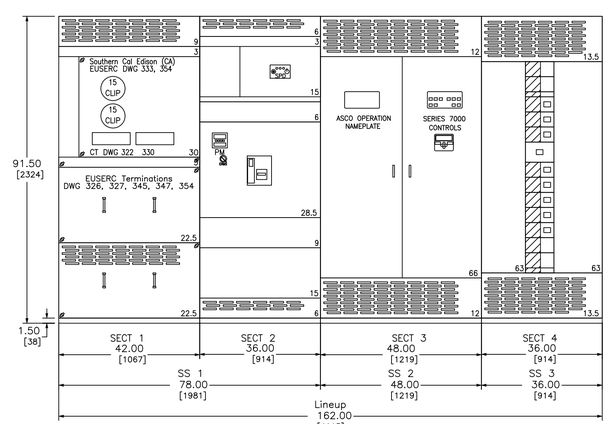

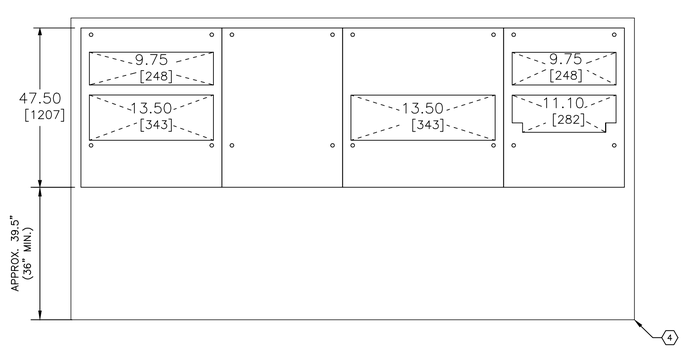

EQUIPMENT ELEVATIONS & FLOOR PLAN – MAIN SWITCHBOARD 'MS'

SCALE: NO SCALE

LOAD SCHEDULE @ 208Y/120V, 3PH, 4W		
PANEL A	29.2 kVA	81.0 A
PANEL B	12.5 kVA	34.6 A
PANEL C	20.8 kVA	57.8 A
PANEL D	25.0 kVA	69.3 A
PANEL E	26.1 kVA	72.5 A
PANEL F	111.2 kVA	308.8 A
PANEL G	20.6 kVA	57.2 A
(F) BATTERY CABINET	28.8 kVA	80.0 A
TRAIN. FACIL. TX-TF (37.5kVA, 1PH)	28.8 kVA	80.0 A
120 GAL WATER HEATER (APPARATUS BAY)	18.0 kVA	50.0 A
TOTAL	329.7 kVA	991.5 A

REGISTERED PROFESSIONAL ENGINEER DANISH BABU PEERMOHAMED NO. 21736 ELECTRICAL STATE OF CALIFORNIA

04/07/26

Cannon
60 S. California Street, Suite 401
Ventura, CA 93001
P 805.503.4590 F 805.544.3863

THESE DRAWINGS ARE INSTRUMENTS OF SERVICE AND ARE THE PROPERTY OF CANNON. ALL DESIGNS AND INFORMATION ON THESE DRAWINGS ARE FOR USE OF THE SPECIFIED PROJECT AND SHALL NOT BE USED OTHERWISE OR REPRODUCED WITHOUT THE EXPRESSED WRITTEN PERMISSION OF CANNON.

REV.	DESCRIPTION	CK'D	APP	DATE
2	ISSUED FOR BID	DP/DR	-	04/07/26
1	ISSUED FOR REVIEW	DP/DR	-	12/19/25
0	ISSUED FOR BID	AM/DR	-	06/11/25

PUBLIC WORKS DEPARTMENT ENGINEERING DIVISION

CITY OF SAN BUENAVENTURA

FIRE STATION NO. 7

SINGLE LINE DIAGRAM

DRN. BY: AM | DES. BY: AM | CK'D. BY: AM/DR

PRINCIPAL ENGINEER — DATE: 5 May 2026

CITY ENGINEER — DATE: 5/7/2026

SPEC. NUMBER 2025-010 | PROJECT NUMBER FA11-1061

June 11, 2025 | SHEET 97 OF151 | DWG. NO. 2025-D-010

F:\proj\2023\230644\4 Production and Drafting\Const Dwgs\E\Electrical Drawings\E230644EL0001.dwg 4-06-26 03:58:33 PM MichelleA

MAIN SWITCHBOARD 'MS'

BUS RATING: 1200A, 120/208V, 3PH, 4W
NEMA 3R
AIC RATING: 65K

DISTRIBUTION					CONNECTED VA (AMPS) %VD			
DIST (FT)	PANEL/LOAD	TRIP	POLES	COND SIZE	PHASE A	PHASE B	PHASE C	CALC TYPE
135	PANEL A (LIVING)	125	3	1	11640 (97.0A) 1.68%	11360 (94.7A) 1.64%	6180 (51.5A) 0.89%	CON
155	PANEL B (LIVING)	125	3	1	4200 (35.0A) 0.69%	4603 (38.4A) 0.76%	3660 (30.5A) 0.61%	CON
165	PANEL C (LIVING)	125	3	1	6065 (50.5A) 1.07%	8016 (66.8A) 1.41%	6756 (56.3A) 1.19%	CON
175	PANEL D (LIVING)	125	3	1	8760 (73.0A) 1.64%	9480 (79.0A) 1.77%	6720 (56.0A) 1.26%	CON
185	PANEL E (GYM)	125	3	1/0	9090 (75.8A) 1.42%	10893 (90.8A) 1.70%	6139 (51.2A) 0.96%	CON
55	PANEL F (APP BAY)	400	3	2-3/0	38057 (317.1A) 0.37%	34925 (291.0A) 0.34%	36390 (303.3A) 0.36%	CON
170	PANEL G (OUTSIDE)	100	3	2	6743 (56.2A) 1.54%	5540 (46.2A) 1.27%	8320 (69.3A) 1.90%	CON
	(F) BATTERY CABINET	100	3	-	9600 (80.0A)	9600 (80.0A)	9600 (80.0A)	
250	(E) TRAINING FACILITIES	250	2	300	18750 (156.3A) 1.61%	0	18750 (156.3A) 1.61%	CON
				KVA (AMPS):	112.90 (940.9A)	94.42 (786.8A)	102.52 (854.3A)	

Total KVA 309.84
Total Amps 860

VD CALCULATION TYPE
CON CONNECTED LOAD
CB 80% OF BREAKER RATING

PANEL G

BUS RATING: 225A 120/208V, 3PH, 4W
MAIN: 100A, 3-POLE
SPACES: 30 FULL SIZE BOLT-ON CB SPACES
AIC RATING: 22kA

MOUTING: SURFACE MOUNT, NEMA 3R
LOCATION: OUTSIDE
WITH EQUIPMENT GND BUS, FULL NUETRAL

CKT %VD	DIST (FT)	NOTES	LOAD TYPE	CKT	DESCRIPTION	TRIP	POLES	COND SIZE	CONNECTED VA PHASE A	PHASE B	PHASE C	COND SIZE	POLES	TRIP	DESCRIPTION	CKT	LOAD TYPE	NOTES	DIST (FT)	CKT %VD
1.98%	160		M	**1**	ACCESS GATE MOTOR	20	1	10	720 / 530			10	1	20	LIGHT POLES	**2**	L		255	**2.33%**
0.60%	195		R	**3**	PRESSURE WASHER RECEPT.	20	1	10		180			1	20	SPARE	**4**				
			C	**5**	(F) LEVEL 2, DUAL-PORT, POWER SHARE EV CHARGER	40	2	-			3328		1	20	SPARE	**6**				
			C	**7**	-	-	-	-	3328 / 1200			10	2	20	OUTDOOR TRUCK WASH	**8**	N		195	**2.33%**
			C	**9**	(F) LEVEL 2, DUAL-PORT, POWER SHARE EV CHARGER	40	2	-		3328 / 1200		-	-	-	-	**10**	N			
			C	**11**	-	-	-	-			3328		1	20	SPARE	**12**				
				13	SPARE	20	1						1	20	SPARE	**14**				
				15	SPARE	20	1						1	20	SPARE	**16**				
				17	SPARE	20	1						1	20	SPARE	**18**				
				19	SPARE	20	1						1	20	SPARE	**20**				
				21	SPARE	20	1						1	20	SPARE	**22**				
				23	SPARE	20	1						1	20	SPARE	**24**				
				25	SPARE	20	1						1	20	SPARE	**26**				
				27	SPARE	20	1						1	20	SPARE	**28**				
				29	SPARE	20	1						1	20	SPARE	**30**				
									CON: 5778	4708	6656									
									25%: 965	832	1664									
									SUB: 0	0	0									
									TOT: 6743	5540	8320									
									AMPS 56	46	69									

PANEL NOTES:
1. BOLT-ON CIRCUIT BREAKERS.
2. ALL COPPER BUSSING.
3. ALL PADLOCKABLE CIRCUIT BREAKERS.

LOAD (VA)	LOAD TYPE LEGEND	
180	R	RECEPTACLE
530	L	LIGHTING (125% OF CONNECTED LOAD CEC 215.2)
720	M	MECHANICAL
0	K	KITCHEN APPLIANCE
2400	N	NON-CONTINUOUS MISC.
13312	C	CONTINUOUS MISC. (125% OF CONNECTED LOAD CEC 215.2)

PANEL F

BUS RATING: 400A 120/208V, 3PH, 4W
MAIN: 400A, 3-POLE
SPACES: 72 FULL SIZE BOLT-ON CB SPACES
AIC RATING: 22kA

MOUTING: SURFACE MOUNT, NEMA 1
LOCATION: APPARATUS BAY
WITH EQUIPMENT GND BUS, FULL NUETRAL

CKT %VD	DIST (FT)	NOTES	LOAD TYPE	CKT	DESCRIPTION	TRIP	POLES	COND SIZE	CONNECTED VA PHASE A	PHASE B	PHASE C	COND SIZE	POLES	TRIP	DESCRIPTION	CKT	LOAD TYPE	NOTES	DIST (FT)	CKT %VD
1.44%	75		C	**1**	CIRCULATION FAN 'CF-1'	15	1	12	696 / 18			12	1	15	LOUVER 'L-2' ACTUATOR	**2**	M		150	**0.07%**
1.21%	70		C	**3**	'VEHICAL' EXHAUST FAN CONTROL PANEL 'VEXC-1'	30	3	10		2005 / 150		12	1	15	'VEXR-1' RECEPTACLE	**4**	R		125	**0.52%**
			C	**5**	-	-	-	-			2005 / 150	12	1	15	'VEXR-2' RECEPTACLE	**6**	R		145	**0.60%**
			C	**7**	-	-	-	-	2005 / 150			12	1	15	'VEXR-3 RECEPTACLE	**8**	R		165	**0.68%**
1.31%	65		C	**9**	ELECTRIC UNIT HEATER 'EUH-1'	40	3	8		3747 / 1176		10	1	15	EXHAUST FAN 'EF-1'	**10**	C		95	**1.92%**
			C	**11**	-	-	-	-			3747 / 3203	8	2	40	AIR COMPRESSOR 'AC-1'	**12**	C		90	**1.80%**
			C	**13**	-	-	-	-	3747 / 3203			-	-	-	-	**14**	C			
1.21%	60		C	**15**	ELECTRIC UNIT HEATER 'EUH-2'	40	3	8		3747 / 2400		6	1	30	EXHAUST FAN 'EF-2'	**16**	C		160	**2.62%**
			C	**17**	-	-	-	-			3747 / 3328	-	2	40	(F) DETOX SAUNA	**18**	C			
			C	**19**	-	-	-	-	3747 / 3328			-	-	-	-	**20**	C			
			C	**21**	(F) SCBA FILL STATION	80	3	-		7133		-	2	20	SPARE	**22**				
			C	**23**	-	-	-	-			7133	-	-	-	-	**24**				
			C	**25**	-	-	-	-	7133 / 1766			10	2	30	GENERATOR AUX POWER	**26**	C		75	**1.32%**
0.35%	15		C	**27**	SPLIT SYSTEM HEAT PUMP 'DS-1'	20	2	12		1456 / 1766		-	-	-	-	**28**	C			
			C	**29**	-	-	-	-			1456 / 420	12	3	15	APP. BAY ROLL-UP DOOR OPERATOR #5	**30**	C		75	**0.43%**
0.61%	105		C	**31**	APP. BAY ROLL-UP DOOR OPERATOR #1	15	3	12	420 / 420			-	-	-	-	**32**	C			
			C	**33**	-	-	-	-		420 / 420		-	-	-	-	**34**	C			
			C	**35**	-	-	-	-			420 / 420	12	3	15	APP. BAY ROLL-UP DOOR OPERATOR #6	**36**	C		90	**0.52%**
0.75%	130		C	**37**	APP. BAY ROLL-UP DOOR OPERATOR #2	15	3	12	420 / 420			-	-	-	-	**38**	C			
			C	**39**	-	-	-	-		420 / 420		-	-	-	-	**40**	C			
			C	**41**	-	-	-	-			420 / 900	10	1	20	APP. BAY INDOOR RECEPTACLES	**42**	R		105	**1.63%**
0.84%	145		C	**43**	APP. BAY ROLL-UP DOOR OPERATOR #3	15	3	12	420 / 900			10	1	20	APP. BAY INDOOR RECEPTACLES	**44**	R		115	**1.78%**
			C	**45**	-	-	-	-		420 / 720		10	1	20	APP. BAY INDOOR RECEPTACLES	**46**	R		185	**2.29%**
			C	**47**	-	-	-	-			420 / 720	10	1	20	APP. BAY OUTDOOR RECEPTACLES	**48**	R		150	**1.86%**
0.29%	50		C	**49**	APP. BAY ROLL-UP DOOR OPERATOR #4	15	3	12	420 / 720			10	1	20	APP. BAY OUTDOOR RECEPTACLES	**50**	R		100	**1.24%**
			C	**51**	-	-	-	-		420 / 540		12	1	20	TURNOUT & EMT STORAGE ROOM RECEPTACLES	**52**	R		75	**1.11%**
			C	**53**	-	-	-	-			420 / 290	12	1	20	APP. BAY LIGHTING ZONE 1	**54**	L		300	**2.39%**
			L	**55**	TURNOUT, EMT STORAGE, AND AIR COMPRESSOR LIGHTING	20	1	12	290 / 580			10	1	20	APP. BAY LIGHTING ZONE 2	**56**	L		285	**2.85%**
1.77%	180		L	**57**	APP. BAY OUTDOOR LIGHTING	20	1	10		572 / 290		12	1	20	APP. BAY LIGHTING ZONE 3	**58**	L		265	**2.11%**
0.11%	115		L	**59**	MAPBOARD LIGHTING	20	1	12			35 / 232	12	1	20	APP. BAY LIGHTING ZONE 4	**60**	L		250	**1.60%**
				61	SPARE	20	1						1	20	SPARE	**62**				
				63	SPARE	20	1						1	20	SPARE	**64**				
				65	SPARE	20	1						1	20	SPARE	**66**				
				67	SPARE	20	1						1	20	SPARE	**68**				
				69	SPARE	20	1						1	20	SPARE	**70**				
				71	SPARE	20	1						1	20	SPARE	**72**				
									CON: 30803	28222	29466									
									25%: 7254	6703	6924									
									SUB: 0	0	0									
									TOT: 38057	34925	36390									
									AMPS 317	291	303									

PANEL NOTES:
1. BOLT-ON CIRCUIT BREAKERS.
2. ALL COPPER BUSSING.
3. ALL PADLOCKABLE CIRCUIT BREAKERS.

LOAD (VA)	LOAD TYPE LEGEND	
4950	R	RECEPTACLE
2289	L	LIGHTING (125% OF CONNECTED LOAD CEC 215.2)
18	M	MECHANICAL
0	K	KITCHEN APPLIANCE
0	N	NON-CONTINUOUS MISC.
81234	C	CONTINUOUS MISC. (125% OF CONNECTED LOAD CEC 215.2)

PANEL TF

BUS RATING: 225A 120/240V, 1PH, 3W
MAIN: 200A, 2-POLE
SPACES: 30 FULL SIZE BOLT-ON CB SPACES
AIC RATING: 22kA

MOUTING: SURFACE MOUNT, NEMA 3R
LOCATION: OUTSIDE, TRAINING FACILITIES
WITH EQUIPMENT GND BUS, FULL NUETRAL

CKT %VD	DIST (FT)	NOTES	LOAD TYPE	CKT	DESCRIPTION	TRIP	POLES	COND SIZE	CONNECTED VA PHASE A	PHASE B	COND SIZE	POLES	TRIP	DESCRIPTION	CKT	LOAD TYPE	NOTES	DIST (FT)	CKT %VD
				1	(E) CIRCUIT	20	1							SPACE	**2**				
				3	(E) CIRCUIT	20	2							SPACE	**4**				
				5	-	-	-							SPACE	**6**				
				7	(E) CIRCUIT	20	2							SPACE	**8**				
				9	-	-	-							SPACE	**10**				
				11	(E) CIRCUIT	30	2							SPACE	**12**				
				13	-	-	-							SPACE	**14**				
				15	SPARE	50	2							SPACE	**16**				
				17	-	-	-							SPACE	**18**				
				19	(E) CIRCUIT	100	2							SPACE	**20**				
				21	-	-	-							SPACE	**22**				
				23	(E) CIRCUIT	100	2							SPACE	**24**				
				25	-	-	-							SPACE	**26**				
				27	SPACE									SPACE	**28**				
				29	SPACE									SPACE	**30**				
									CON: 0	0									
									25%: 0	0									
									SUB: 0	0									
									TOT: 0	0									
									AMPS 0	0									

PANEL NOTES:
1. BOLT-ON CIRCUIT BREAKERS.
2. ALL COPPER BUSSING.
3. CIRCUIT LABELS SHALL BE COORDINATED WITH THE CITY.

LOAD (VA)	LOAD TYPE LEGEND	
0	R	RECEPTACLE
0	L	LIGHTING (125% OF CONNECTED LOAD CEC 215.2)
0	M	MECHANICAL
0	K	KITCHEN APPLIANCE
0	N	NON-CONTINUOUS MISC.
0	C	CONTINUOUS MISC. (125% OF CONNECTED LOAD CEC 215.2)

REGISTERED PROFESSIONAL ENGINEER
DUNCAN BABU PEERMOHAMED
NO. 21736
ELECTRICAL
STATE OF CALIFORNIA
04/07/26

Cannon
60 S. California Street, Suite 401
Ventura, CA 93001
P 805.503.4590 F 805.544.3863

THESE DRAWINGS ARE INSTRUMENTS OF SERVICE AND ARE THE PROPERTY OF CANNON. ALL DESIGNS AND INFORMATION ON THESE DRAWINGS ARE FOR USE OF THE SPECIFIED PROJECT AND SHALL NOT BE USED OTHERWISE OR REPRODUCED WITHOUT THE EXPRESSED WRITTEN PERMISSION OF CANNON.

REV.	DESCRIPTION	CK'D	APP	DATE
2	ISSUED FOR BID	DP/DR	-	04/07/26
1	ISSUED FOR REVIEW	DP/DR	-	12/19/25
0	ISSUED FOR BID	AM/DR	-	06/11/25

PUBLIC WORKS DEPARTMENT ENGINEERING DIVISION
CITY OF SAN BUENAVENTURA

FIRE STATION NO. 7
PANEL SCHEDULES

DRN. BY: AM | DES. BY: AM | CK'D. BY: AM/DR

PRINCIPAL ENGINEER — DATE: 5 May 2026
CITY ENGINEER — DATE: 5/7/2026

SPEC. NUMBER 2025-010 | PROJECT NUMBER FA11-1061
June 11, 2025 | SHEET 98 OF151 | DWG. NO. 2025-D-010

F:\proj\2023\230644\4 Production and Drafting\Const Dwgs\IE\Electrical Drawings\IE230644EL0001.dwg 4-06-26 03:58:39 PM MichelleA

STATE OF CALIFORNIA

Indoor Lighting

CALIFORNIA ENERGY COMMISSION

CERTIFICATE OF COMPLIANCE		NRCC-LTI-E
This document is used to demonstrate compliance with requirements in 110.9, 110.12(c), 130.0, 130.1, 140.6 and 141.0(b)2 for indoor lighting scopes using the prescriptive path for nonresidential and hotel/motel occupancies. It is also used to document compliance with requirements in 160.5, 170.2(e) and 180.2(b)4 for indoor lighting scopes using the prescriptive path for multifamily occupancies. Multifamily includes dormitory and senior living facilities.		
Project Name: Ventura Fire Station No. 7 - Apparatus Bay	**Report Page:**	**(Page 1 of 8)**
Project Address: 2269 Alessandro Dr	**Date Prepared:**	6/10/2025

A. GENERAL INFORMATION

01	Project Location (city)	Ventura	04 Total Conditioned Floor Area (ft^2)	4,939
02	Climate Zone	6	05 Total Unconditioned Floor Area (ft^2)	548
03	Occupancy Types Within Project (select all that apply):		06 # of Stories (Habitable Above Grade)	1

● All Other Occupancies

B. PROJECT SCOPE

This table includes any lighting systems that are within the scope of the permit application and are demonstrating compliance using the prescriptive path outlined in 140.6 / 170.2(e) or 141.0(b)2 / 180.2(b)4 for alterations.

Scope of Work	Conditioned Spaces		Unconditioned Spaces	
01	02	03	04	05
My Project Consists of (check all that apply):	Calculation Method	Area (ft^2)	Calculation Method	Area (ft^2)
☒ New Lighting System	Area Category Method	4939	Area Category Method	548
☐ New Lighting System - Parking Garage				
Total Area of Work (ft^2)	4939		548	

STATE OF CALIFORNIA

Indoor Lighting

CALIFORNIA ENERGY COMMISSION

CERTIFICATE OF COMPLIANCE		NRCC-LTI-E
Project Name: Ventura Fire Station No. 7 - Apparatus Bay	**Report Page:**	**(Page 2 of 8)**
	Date Prepared:	6/10/2025

C. COMPLIANCE RESULTS

If any cell on this table says "DOES NOT COMPLY" or "COMPLIES with Exceptional Conditions" refer to Table D. for guidance.

Lighting in conditioned and unconditioned spaces must not be combined for compliance per 140.6(b)1 / 170.2(e)	Allowed Lighting Power per 140.6(b) / 170.2(e) (Watts)						≥	Adjusted Lighting Power per 140.6(a) / 170.2(e) (Watts)				Compliance Results
	01	02	03	04		05		06	07		08	09
	Complete Building 140.6(c)1	Area Category 140.6(c)2 / 170.2(e)4	Area Category Additional 140.6(c)2G / 170.2(e)4Av (+)	Tailored 140.6(c)3 / 170.2(e)4B (+)	=	**Total Allowed** (Watts)		Total Designed (Watts)	Adjustments PAF Lighting Control Credits 140.6(a)2 / 170.2(e)1B (-)	=	**Total Adjusted** (Watts) *Includes Adjustments	**05 must be >= 08 140.6 / 170.2(e)**
	(See Table I)	(See Table I)	(See Table J)	(See Table K)				(See Table F)	(See Table P)			
Conditined		1,975.6	0		=	1,976	≥	1,485	0	=	1485	COMPLIES
Unconditined		219.2	0		=	219	≥	174	0	=	174	COMPLIES
Controls Compliance (See Table H for Details)												COMPLIES
Rated Power Reduction Compliance (See Table Q for Details)												

D. EXCEPTIONAL CONDITIONS

This table is auto-filled with uneditable comments because of selections made or data entered in tables throughout the form.

E. ADDITIONAL REMARKS

This table includes remarks made by the permit applicant to the Authority Having Jurisdiction.

STATE OF CALIFORNIA

Indoor Lighting

CALIFORNIA ENERGY COMMISSION

CERTIFICATE OF COMPLIANCE		NRCC-LTI-E
Project Name: Ventura Fire Station No. 7 - Apparatus Bay	**Report Page:**	**(Page 3 of 8)**
	Date Prepared:	6/10/2025

F. INDOOR LIGHTING FIXTURE SCHEDULE

This table includes all planned permanent and portable lighting other than dwelling unit/ hotel/ motel room lighting. Multifamily dwelling unit and hotel/motel room lighting is documented in Table T. If using Table T to document lighting in multifamily common use areas providing shared provisions for living, eating, cooking or sanitation, those luminaires are not included here.

Designed Wattage: Conditioned Spaces

01	02	03	04	05	06	07	08	09	10	
Name or Item Tag	Complete Luminaire Description	Modular (Track) Fixture	Small Aperture & Color Change[1]	Watts per luminaire[2]	How is Wattage determined	Total Number of Luminaires	Excluded per 140.6(a)3 / 170.2(e)2C	Design Watts	Field Inspector	
									Pass	Fail
PXLW	PXLW	No	NA	58	Mfr. Spec	25	No	1,450	☐	☐
PXLW-2	PXLW-2	No	NA	35	Mfr. Spec	1	No	35	☐	☐
Total Designed Watts: CONDITIONED SPACES								1,485		

Designed Wattage: Unconditioned Spaces

01	02	03	04	05	06	07	08	09	10	
Name or Item Tag	Complete Luminaire Description	Modular (Track) Fixture	Small Aperture & Color Change[1]	Watts per luminaire[2]	How is Wattage determined	Total Number of Luminaires	Excluded per 140.6(a)3 / 170.2(e)2C	Design Watts	Field Inspector	
									Pass	Fail
PXLW	PXLW	No	NA	58	Mfr. Spec	3	No	174	☐	☐
Total Designed Watts: UNCONDITIONED SPACES								174		

[1]FOOTNOTE: Design Watts for small aperture and color changing luminaires which qualify per 140.6(a)4B / 170.2(e)2D is adjusted to be 75% /80% of their rated wattage. Table F automatically makes this adjustment, the permit applicant should enter full rated wattage in column 05.

[2]Authority Having Jurisdiction may ask for Luminaire cut sheets to confirm wattage used for compliance per 130.0(c) / 160.5(b). Wattage used must be the maximum rated for the luminaire, not the lamp.

G. MODULAR LIGHTING SYSTEMS

This section does not apply to this project.

STATE OF CALIFORNIA

Indoor Lighting

CALIFORNIA ENERGY COMMISSION

CERTIFICATE OF COMPLIANCE		NRCC-LTI-E
Project Name: Ventura Fire Station No. 7 - Apparatus Bay	**Report Page:**	**(Page 4 of 8)**
	Date Prepared:	6/10/2025

H. INDOOR LIGHTING CONTROLS (Not including PAFs)

This table includes lighting controls for conditioned and unconditioned spaces.

Building Level Controls

01	02	03	
Mandatory Demand Response 110.12(c)	Shut-off controls 130.1(c) / 160.5(b)4C	Field Inspector	
		Pass	Fail
NA < 4,000W subject to multilevel	See Area/Space Level Controls	☐	☐

Area Level Controls

04	05	06	07	08	09	10	11	12	
Area Description	Complete Building or Area Category Primary Function Area	Manual Area Controls 130.1(a) / 160.5(b)4A	Multi-Level Controls 130.1(b) / 160.5(b)4B	Shut-Off Controls 130.1(c) // 160.5(b)4C	Primary/Skylit Daylighting 130.1(d) / 160.5(b)4D	Secondary Daylighting 130.1(d) / 160.5(b)4D	Interlocked Systems 140.6(a)1/ 170.2(e)2A	Field Inspector	
								Pass	Fail
Apparatus Bay	All Other Space Types	Readily Accessible	Dimmer	Occupancy Sensor	NA: Rm < 24sf Glazing	NA: Rm < 24sf Glazing	No	☐	☐
EMT Storage	All Other Space Types	Readily Accessible	Dimmer	Occupancy Sensor	NA: Rm < 24sf Glazing	NA: Rm < 24sf Glazing	No	☐	☐
Turnout	All Other Space Types	Readily Accessible	Dimmer	Occupancy Sensor	NA: Rm < 24sf Glazing	NA: Rm < 24sf Glazing	No	☐	☐
13									
Plan Sheet Showing Daylit Zones:									

I. LIGHTING POWER ALLOWANCE: COMPLETE BUILDING OR AREA CATEGORY METHODS

Each area complying using the Complete Building or Area Category Methods per 140.6(b) are included in this table. Column 06 indicates if additional lighting power allowances per 140.6(c) or adjustments per 140.6(a) are being used .

Conditioned Spaces

01	02	03	04	05	06

STATE OF CALIFORNIA

Indoor Lighting

CALIFORNIA ENERGY COMMISSION

CERTIFICATE OF COMPLIANCE		NRCC-LTI-E
Project Name: Ventura Fire Station No. 7 - Apparatus Bay	**Report Page:**	**(Page 5 of 8)**
	Date Prepared:	6/10/2025

I. LIGHTING POWER ALLOWANCE: COMPLETE BUILDING OR AREA CATEGORY METHODS

Area Description	Complete Building or Area Category Primary Function Area	Allowed Density (W/ft^2)	Area (ft^2)	Allowed Wattage (Watts)	Additional Allowance / Adjustment	
					Area Category	PAF
Apparatus Bay	All Other Space Types	0.4	4,801	1,920.4	No	No
EMT Storage	All Other Space Types	0.4	138	55.2	No	No
		TOTALS:	4,939	1,975.6	See Tables J, or P for detail	

Unconditioned Spaces

01	02	03	04	05	06	
Area Description	Complete Building or Area Category Primary Function Area	Allowed Density (W/ft^2)	Area (ft^2)	Allowed Wattage (Watts)	Additional Allowance / Adjustment	
					Area Category	PAF
Turnout	All Other Space Types	0.4	548	219.2	No	No
		TOTALS:	548	219.2	See Tables J, or P for detail	

J. ADDITIONAL ALLOWANCE: AREA CATEGORY METHOD QUALIFYING LIGHTING SYSTEM

This section does not apply to this project.

K. TAILORED METHOD GENERAL LIGHTING POWER ALLOWANCE

This section does not apply to this project.

L. ADDITIONAL LIGHTING ALLOWANCE: TAILORED WALL DISPLAY

This section does not apply to this project.

M. ADDITIONAL LIGHTING ALLOWANCE: TAILORED FLOOR AND TASK LIGHTING

This section does not apply to this project.

STATE OF CALIFORNIA

Indoor Lighting

CALIFORNIA ENERGY COMMISSION

CERTIFICATE OF COMPLIANCE		NRCC-LTI-E
Project Name: Ventura Fire Station No. 7 - Apparatus Bay	**Report Page:**	**(Page 6 of 8)**
	Date Prepared:	6/10/2025

N. ADDITIONAL LIGHTING ALLOWANCE: TAILORED DECORATIVE /SPECIAL EFFECTS

This section does not apply to this project.

O. ADDITIONAL LIGHTING ALLOWANCE: TAILORED VERY VALUABLE MERCHANDISE

This section does not apply to this project.

P. POWER ADJUSTMENT: LIGHTING CONTROL CREDIT (POWER ADJUSTMENT FACTOR (PAF))

This section does not apply to this project.

Q. RATED POWER REDUCTION COMPLIANCE FOR ONE-FOR-ONE ALTERATIONS

This section does not apply to this project.

R. 80% LIGHTING POWER FOR ALL ALTERATIONS - CONTROLS EXCEPTIONS

This section does not apply to this project.

S. DAYLIGHT DESIGN POWER ADJUSTMENT FACTOR (PAF)

This section does not apply to this project.

T. DWELLING UNIT LIGHTING

This section does not apply to this project.

REGISTERED PROFESSIONAL ENGINEER
DINESH BABU PEERMAGUTTER
NO. 21736
ELECTRICAL
STATE OF CALIFORNIA
04/07/26

Cannon
60 S. California Street, Suite 401
Ventura, CA 93001
P 805.503.4590 F 805.544.3863

THESE DRAWINGS ARE INSTRUMENTS OF SERVICE AND ARE THE PROPERTY OF CANNON. ALL DESIGNS AND INFORMATION ON THESE DRAWINGS ARE FOR USE OF THE SPECIFIED PROJECT AND SHALL NOT BE USED OTHERWISE OR REPRODUCED WITHOUT THE EXPRESSED WRITTEN PERMISSION OF CANNON.

REV.	DESCRIPTION	CK'D	APP	DATE
2	ISSUED FOR BID	DP/DR	-	04/07/26
1	ISSUED FOR REVIEW	DP/DR	-	12/19/25
0	ISSUED FOR BID	AM/DR	-	06/11/25

PUBLIC WORKS DEPARTMENT ENGINEERING DIVISION
CITY OF SAN BUENAVENTURA

FIRE STATION NO. 7
TITLE 24 DOCUMENTATION

DRN. BY: AM | DES. BY: AM | CK'D. BY: AM/DR

PRINCIPAL ENGINEER — DATE: 5 May 2026
CITY ENGINEER — DATE: 5/7/2026

SPEC. NUMBER 2025-010 | PROJECT NUMBER FA11-1061
June 11, 2025 | SHEET 99 OF151 | DWG. NO. 2025-D-010

F:\proj\2023\230644\4 Production and Drafting\Const Dwgs\E\Electrical Drawings\E230644EL0001.dwg 4-06-26 03:58:48 PM MichelleA

STATE OF CALIFORNIA
Indoor Lighting
CALIFORNIA ENERGY COMMISSION

CERTIFICATE OF COMPLIANCE		NRCC-LTI-E
Project Name: Ventura Fire Station No. 7 - Apparatus Bay	**Report Page:**	**(Page 7 of 8)**
	Date Prepared:	6/10/2025

U. DECLARATION OF REQUIRED CERTIFICATES OF INSTALLATION

Selections have been made based on information provided in this document. If any selections have been changed by permit applicant, an explanation should be included in Table E. Additional Remarks. These documents must be provided to the building inspector during construction and can be found online

Form/Title
NRCI-LTI-E - Must be submitted for all buildings

V. DECLARATION OF REQUIRED CERTIFICATES OF ACCEPTANCE

Selections have been made based on information provided in this document. If any selections have been changed by the permit applicant, an explanation should be included in Table E. Additional Remarks. These documents must be provided to the building inspector during construction and any with "-A" in the form name must be completed through an Acceptance Test Technician Certification Provider (ATTCP). For more information visit: http://www.energy.ca.gov/title24/attcp/providers.html

Form/Title	Systems/Spaces To Be Field Verified
NRCA-LTI-02-A - Must be submitted for occupancy sensors and automatic time switch controls.	Apparatus Bay; EMT Storage; Turnout;

STATE OF CALIFORNIA
Indoor Lighting
CALIFORNIA ENERGY COMMISSION

CERTIFICATE OF COMPLIANCE		NRCC-LTI-E
Project Name: Ventura Fire Station No. 7 - Apparatus Bay	**Report Page:**	**(Page 8 of 8)**
Project Address: 2269 Alessandro Dr	**Date Prepared:**	6/10/2025

DOCUMENTATION AUTHOR'S DECLARATION STATEMENT

I certify that this Certificate of Compliance documentation is accurate and complete.

Documentation Author Name: Dinesh B Peeramsetty, PE	Documentation Author Signature:
Company: Cannon	Signature Date: 2025-06-10
Address: 1050 Southwood Dr	CEA/ HERS Certification Identification (if applicable):
City/State/Zip: San Luis Obispo, CA 93401	Phone: 661-473-9562

RESPONSIBLE PERSON'S DECLARATION STATEMENT

I certify the following under penalty of perjury, under the laws of the State of California:

1. The information provided on this Certificate of Compliance is true and correct.
2. I am eligible under Division 3 of the Business and Professions Code to accept responsibility for the building design or system design identified on this Certificate of Compliance (responsible designer)
3. The energy features and performance specifications, materials, components, and manufactured devices for the building design or system design identified on this Certificate of Compliance conform to the requirements of Title 24, Part 1 and Part 6 of the California Code of Regulations.
4. The building design features or system design features identified on this Certificate of Compliance are consistent with the information provided on other applicable compliance documents, worksheets, calculations, plans and specifications submitted to the enforcement agency for approval with this building permit application.
5. I will ensure that a completed signed copy of this Certificate of Compliance shall be made available with the building permit(s) issued for the building, and made available to the enforcement agency for all applicable inspections. I understand that a completed signed copy of this Certificate of Compliance is required to be included with the documentation the builder provides to the building owner at occupancy.

Responsible Designer Name: Dinesh B Peeramsetty, PE	Responsible Designer Signature:
Company: Cannon	Date Signed: 2025-06-10
Address: 1050 Southwood Dr	License: E 21736
City/State/Zip: San Luis Obispo CA 93401	Phone: 661-473-9562

STATE OF CALIFORNIA
Outdoor Lighting
CALIFORNIA ENERGY COMMISSION

CERTIFICATE OF COMPLIANCE		NRCC-LTO-E
This document is used to demonstrate compliance with requirements in 110.9, 130.0, 130.2, 140.7, and 141.0(b)2L for outdoor lighting scopes using the prescriptive path for nonresidential and hotel/motel occupancies. It is also used to document compliance with requirements in 160.5, 170.2(e)6, 180.1(a) and 180.2(b)4Bv for outdoor lighting scopes using the prescriptive path for multifamily and mixed-use occupancies. Multifamily includes dormitory and senior living facilities.		
Project Name: Ventura Fire Station No. 7 - Apparatus Bay	**Report Page:**	**(Page 1 of 7)**
Project Address: 2269 Alessandro Dr	**Date Prepared:**	6/10/2025

A. GENERAL INFORMATION

01	Project Location (city)	Ventura	04	Total Illuminated Hardscape Area (ft^2)	0
02	Climate Zone	6			
03	Outdoor Lighting Zone per Title 24 Part 1 10.114 or as designated by Authority Having Jurisdiction (AHJ):				
☐	LZ-0: Very Low - Undeveloped Parkland	☐ LZ-2: Moderate - Urban Clusters	☐ LZ-4: High - Must be reviewed by CA Energy Commission for Approval		
☐	LZ-1: Low - Rural Areas	☒ LZ-3: Moderately High - Urban Areas			
05	Occupancy Types within Project				
● All Other Occupancies					

B. PROJECT SCOPE

This table includes outdoor lighting systems that are within the scope of the permit application and are demonstrating compliance using the prescriptive path outlined in 140.7 / 170.2(e)6 or 141.0(b)2L / 180.2(b)4Bv for alterations.

My Project Consists of:

01	02
☒ New Lighting System	Must Comply with Allowances from 140.7 / 170.2(e)6
☐ Altered Lighting System	Is your alteration increasing the connected lighting load (Watts)? ○ Yes ○ No

03	04	05
% of Existing Luminaires Being Altered[1]	Sum Total of Luminaires Being Added or Altered	Calculation Method
☐ < 10% ☐ >= 10% and < 50% ☐ >= 50%		

Please proceed to Table F. Outdoor Lighting Fixture Schedule to define the project's luminaires.

[1] FOOTNOTES: % of Existing Luminaires Being Altered = (Sum Total of Luminaires Being Added or Altered / Existing Luminaires within the Scope of the Permit Application) x 100.

STATE OF CALIFORNIA
Outdoor Lighting
CALIFORNIA ENERGY COMMISSION

CERTIFICATE OF COMPLIANCE		NRCC-LTO-E
Project Name: Ventura Fire Station No. 7 - Apparatus Bay	**Report Page:**	**(Page 2 of 7)**
	Date Prepared:	6/10/2025

C. COMPLIANCE RESULTS

Results in this table are automatically calculated from data input and calculations in Tables F through N. Note: If any cell on this table says "COMPLIES with Exceptional Conditions" refer to Table D. Exceptional Conditions for guidance or see applicable Table referenced below.

Calculations of Total Allowed Lighting Power (Watts) 140.7 / 170.2(e)6 or 141.0(b)2L / 180.2(b)4Bv											Compliance Results			
01		02		03		04		05		06		07		08	09
General Hardscape Allowance 140.7(d)1 / 170.2(e)6 (See Table I)	+	Per Application 140.7(d)2 / 170.2(e)6 (See Table J)	+	Sales Frontage 140.7(d)2 (See Table K)	+	Ornamental 140.7(d)2 / 170.2(e)6 (See Table L)	+	Per Specific Area 140.7(d)2 / 170.2(e)6 (See Table M)	OR	Existing Power Allowance 141.0(b)2L / 180.2(b)4Bv (See Table N)	=	**Total Allowed** (Watts)	≥	**Total Actual** (Watts)	**07 must be >= 08**
0	+	---	+	---	+	---	+	630	OR	---	=	630	≥	630	COMPLIES
Shielding Compliance (See Table G for Details)															N/A
Controls Compliance (See Table H for Details)															COMPLIES

D. EXCEPTIONAL CONDITIONS

This table is auto-filled with uneditable comments because of selections made or data entered in tables throughout the form.

E. ADDITIONAL REMARKS

This table includes remarks made by the permit applicant to the Authority Having Jurisdiction.

STATE OF CALIFORNIA
Outdoor Lighting
CALIFORNIA ENERGY COMMISSION

CERTIFICATE OF COMPLIANCE		NRCC-LTO-E
Project Name: Ventura Fire Station No. 7 - Apparatus Bay	**Report Page:**	**(Page 3 of 7)**
	Date Prepared:	6/10/2025

F. OUTDOOR LIGHTING FIXTURE SCHEDULE

For new or altered lighting systems demonstrating compliance with 140.7 / 170.2(e)6 all new luminaires being installed and any existing luminaires remaining or being moved within the spaces covered by the permit application are included in the Table below. For altered lighting systems using the Existing Power method per 141.0(b)2L only new luminaires being installed and replacement luminaires being installed as part of the project scope are included (ie, existing luminaires remaining or existing luminaires being moved are not included). Outdoor lighting attached to multifamily buildings and controlled from the inside of a dwelling unit are included in Table H. and are not included here. All other multifamily outdoor lighting is included here.

Designed Wattage:

01	02		03	04	05	06	07	08	09	10	
Name or Item Tag	Complete Luminaire Description		Watts per luminaire[1, 2]	How is Wattage determined	Total Number Luminaires[2]	Luminaire Status[3]	Excluded per 140.7(a) / 170.2(e)6A	Design Watts	Cutoff Req. > 6,200 initial lumen output 130.2(b) / 160.5(c)[4]	Field Inspector	
										Pass	Fail
DSXF2	DSXF2	☐ Linear	52	Mfr. Spec	11	New	☐	572	NA: < 6200 lumens	☐	☐
PXLW	PXLW	☐ Linear	58	Mfr. Spec	1	New	☐	58	NA: < 6200 lumens	☐	☐
Total Design Watts:								630			

* NOTES: Selections with a * require a note in the space below explaining how compliance is achieved.
EX: Luminaire is lighting a statue; EXCEPTION 2 to 130.2(b)

[1] FOOTNOTES: Authority Having Jurisdiction may ask for Luminaire cut sheets to confirm wattage used for compliance per 130.0(c) / 160.5(b)
[2] For linear luminaires, wattage should be indicated as W/lf instead of Watts/luminaire. Total linear feet should be indicated in column 05 instead of number of luminaires.
[3] Select "New" for new luminaires in a new outdoor lighting project, or for added luminaires in an alteration. Select "Altered" for replacement luminaires in an alteration. Select "Existing to Remain" for existing luminaires within the project scope that are not being altered and are remaining. Select "Existing Reinstalled" for existing luminaires which are being removed and reinstalled as part of the project scope.
[4] Compliance with mandatory shielding requirements is required for luminaires with initial lumen output >= 6,200 unless exempted by 130.2(b)/ 160.5(c)

G. SHIELDING REQUIREMENTS (BUG)

This section does not apply to this project.

STATE OF CALIFORNIA
Outdoor Lighting
CALIFORNIA ENERGY COMMISSION

CERTIFICATE OF COMPLIANCE		NRCC-LTO-E
Project Name: Ventura Fire Station No. 7 - Apparatus Bay	**Report Page:**	**(Page 4 of 7)**
	Date Prepared:	6/10/2025

H. OUTDOOR LIGHTING CONTROLS

This table demonstrates compliance with controls requirements for all new or altered luminaires installed as part of the permit application. For alteration projects, luminaires which are existing to remain (ie untouched) and luminaires which are removed and reinstalled (wiring only) do not need to be included in this table even if they are within the spaces covered by the permit application.
Outdoor lighting for nonresidential buildings, parking garages and common service areas in multifamily buildings must be documented separately from outdoor lighting attached to multifamily buildings and controlled from the inside of a dwelling unit

Mandatory Controls for Nonresidential Occupancies, Parking Garages & Common Areas in Multifamily Buildings

01	02	03	04	05	
Area Description	Shut-Off 130.2(c)1 / 160.5(c)	Auto-Schedule 130.2(c)2 / 160.5(c)	Motion Sensor 130.2(c)3 / 160.5(c)	Field Inspector	
				Pass	Fail
Apparatus Bay Outdoor	Photocontrol	Provided	Provided	☐	☐

[1] FOOTNOTE: Text has been abbreviated, please refer to Table 160.5-A to confirm compliance with the specific light source technologies listed.
[2] Authority having jurisdiction may ask for cutsheets or other documentation to confirm compliance of light source.
[3] Recessed luminaires marked for use in fire-rated installations, and recessed luminaires installed in non-insulated ceilings are excepted from ii and iii.

I. LIGHTING POWER ALLOWANCE (per 140.7 / 170.2(e))

This table includes areas using allowance calculations per 140.7 / 170.2(e). General Hardscape Allowance is per Table 140.7-A/Table 170.2-R while "Use it or lose it" Allowances are per Table 140.7-B /Table 170.2-S. Indicate which allowances are being used to expand sections for user input. Luminaires that qualify for one of the "Use it or lose it" allowances shall not qualify for another "Use it or lose it" allowance.
Outdoor lighting attached to multifamily buildings and controlled from the inside of a dwelling unit are included in Table H. and are not included here. All other multifamily outdoor lighting is included here.

	01				
		"Use it or lose it" Allowance (select all that apply) (select all that apply)			
☐ General Hardscape Allowance Table I (below)	☐ Per Application Table J	☐ Sales Frontage Table K	☐ Ornamental Table L	☒ Per Specific Area Table M	

J. LIGHTING ALLOWANCE: PER APPLICATION

This section does not apply to this project.

REGISTERED PROFESSIONAL ENGINEER
DINESH BABU PEERAMSETTY
NO. 21736
ELECTRICAL
STATE OF CALIFORNIA
04/07/26

Cannon
60 S. California Street, Suite 401
Ventura, CA 93001
P 805.503.4590 F 805.544.3863

THESE DRAWINGS ARE INSTRUMENTS OF SERVICE AND ARE THE PROPERTY OF CANNON. ALL DESIGNS AND INFORMATION ON THESE DRAWINGS ARE FOR USE OF THE SPECIFIED PROJECT AND SHALL NOT BE USED OTHERWISE OR REPRODUCED WITHOUT THE EXPRESSED WRITTEN PERMISSION OF CANNON.

REV.	DESCRIPTION	CK'D	APP	DATE
2	ISSUED FOR BID	DP/DR	-	04/07/26
1	ISSUED FOR REVIEW	DP/DR	-	12/19/25
0	ISSUED FOR BID	AM/DR	-	06/11/25

PUBLIC WORKS DEPARTMENT ENGINEERING DIVISION
CITY OF SAN BUENAVENTURA

FIRE STATION NO. 7
TITLE 24 DOCUMENTATION

DRN. BY: AM DES. BY: AM CK'D. BY: AM/DR

PRINCIPAL ENGINEER 5 May 2026 DATE

CITY ENGINEER 5/7/2026 DATE

SPEC. NUMBER 2025-010 PROJECT NUMBER FA11-1061

June 11, 2025 SHEET 100 OF151 DWG. NO. 2025-D-010

F:\pro\2023\230644\4 Production and Drafting\Const Dwgs\E\Electrical Drawings\E230644EL0001.dwg 4-06-26 03:58:57 PM MichelleA

K. LIGHTING ALLOWANCE: SALES FRONTAGE

This section does not apply to this project.

L. LIGHTING ALLOWANCE: ORNAMENTAL

This section does not apply to this project.

M. LIGHTING ALLOWANCE: PER SPECIFIC AREA

This table includes areas using the wattage allowance per specific area from Table 140.7-B /Table 170.2-S. More than one specific area allowance may be taken in a single project, if applicable. However, multiple specific area allowances may not be taken for the exact same area on the site.

01	02	03	04	05	06	07	08	09	10
		CALCULATED ALLOWANCE (Watts)			DESIGN WATTS				
Area Description	Specific Area Type per Table 140.7-B	Specific Area (ft^2)[1]	Allowed Density (W/ft^2)	Extra Allowance (Watts)	Luminaire Name or Item Tag	Watts per Luminaire	# of Luminaires	Design Watts	Additional Allowance (Watts)
Apparatus Bay Outdoor	BuildingFacade	4770	0.2	810.9	DSXF2	52	11	572	630
					PXLW	58	1	58	
							Total Design Watts for this Area:	630	
								Total Allowance (Watts) All Areas:	630

[1] *FOOTNOTES: See Table 140.7-B /Table 170.2-S for rules for calculating the specific areas (ft^2 for these additional lighting allowances.*

[2] *For luminaires indicated in Table F as linear, wattage in column 07 is W/lf instead of Watts/luminaire. Total linear feet should be indicated in column 08 instead of number of luminaires.*

N. EXISTING CONDITIONS POWER ALLOWANCE (alterations only)

This section does not apply to this project.

O. DECLARATION OF REQUIRED CERTIFICATES OF INSTALLATION

Selections have been made based on information provided in this document. If any selection has been changed by permit applicant, an explanation should be included in Table E. Additional Remarks. These documents must be provided to the building inspector during construction and can be found online

Form/Title
NRCI-LTO-E - Must be submitted for all buildings

P. DECLARATION OF REQUIRED CERTIFICATES OF ACCEPTANCE

Selections have been made based on information provided in this document. If any selection has been changed by permit applicant, an explanation should be included in Table E. Additional Remarks. These documents must be provided to the building inspector during construction and must be completed through an Acceptance Test Technician Certification Provider (ATTCP). For more information visit: http://www.energy.ca.gov/title24/attcp/providers.html

Form/Title	Systems/Spaces To Be Field Verified
NRCA-LTO-02-A - Must be submitted for all outdoor lighting controls except for alterations where controls are added to <= 20 luminaires.	Apparatus Bay Outdoor;

DOCUMENTATION AUTHOR'S DECLARATION STATEMENT

I certify that this Certificate of Compliance documentation is accurate and complete.

Documentation Author Name: Dinesh B Peeramsetty, PE	Documentation Author Signature:
Company: Cannon	Signature Date: 2025-06-10
Address: 1050 Southwood Dr	CEA/ HERS Certification Identification (if applicable):
City/State/Zip: San Luis Obispo, CA 93401	Phone: 661-473-9562

RESPONSIBLE PERSON'S DECLARATION STATEMENT

I certify the following under penalty of perjury, under the laws of the State of California:

1. The information provided on this Certificate of Compliance is true and correct.
2. I am eligible under Division 3 of the Business and Professions Code to accept responsibility for the building design or system design identified on this Certificate of Compliance (responsible designer)
3. The energy features and performance specifications, materials, components, and manufactured devices for the building design or system design identified on this Certificate of Compliance conform to the requirements of Title 24, Part 1 and Part 6 of the California Code of Regulations.
4. The building design features or system design features identified on this Certificate of Compliance are consistent with the information provided on other applicable compliance documents, worksheets, calculations, plans and specifications submitted to the enforcement agency for approval with this building permit application.
5. I will ensure that a completed signed copy of this Certificate of Compliance shall be made available with the building permit(s) issued for the building, and made available to the enforcement agency for all applicable inspections. I understand that a completed signed copy of this Certificate of Compliance is required to be included with the documentation the builder provides to the building owner at occupancy.

Responsible Designer Name: Dinesh B Peeramsetty, PE	Responsible Designer Signature:
Company: Cannon	Date Signed: 2025-06-10
Address: 1050 Southwood Dr	License: E 21736
City/State/Zip: San Luis Obispo CA 93401	Phone: 661-473-9562

REGISTERED PROFESSIONAL ENGINEER
DINESH BABU PEERAMSETTY
NO. 21736
ELECTRICAL
STATE OF CALIFORNIA
04/07/26

Cannon
60 S. California Street, Suite 401
Ventura, CA 93001
P 805.503.4590 F 805.544.3863

THESE DRAWINGS ARE INSTRUMENTS OF SERVICE AND ARE THE PROPERTY OF CANNON. ALL DESIGNS AND INFORMATION ON THESE DRAWINGS ARE FOR USE OF THE SPECIFIED PROJECT AND SHALL NOT BE USED OTHERWISE OR REPRODUCED WITHOUT THE EXPRESSED WRITTEN PERMISSION OF CANNON.

REV.	DESCRIPTION	CK'D	APP	DATE
2	ISSUED FOR BID	DP/DR	-	04/07/26
1	ISSUED FOR REVIEW	DP/DR	-	12/19/25
0	ISSUED FOR BID	AM/DR	-	06/11/25

PUBLIC WORKS DEPARTMENT ENGINEERING DIVISION
CITY OF SAN BUENAVENTURA

FIRE STATION NO. 7
TITLE 24 DOCUMENTATION

DRN. BY: AM DES. BY: AM CK'D. BY: AM/DR

PRINCIPAL ENGINEER — DATE 5 May 2026

CITY ENGINEER — DATE 5/7/2026

SPEC. NUMBER 2025-010 PROJECT NUMBER FA11-1061

June 11, 2025 SHEET 101OF151 DWG. NO. 2025-D-010

F:\proj\2023\230644\4 Production and Drafting\Const Dwgs\E\Electrical Drawings\E230644EL0001.dwg 4-06-26 03:59:04 PM MichelleA

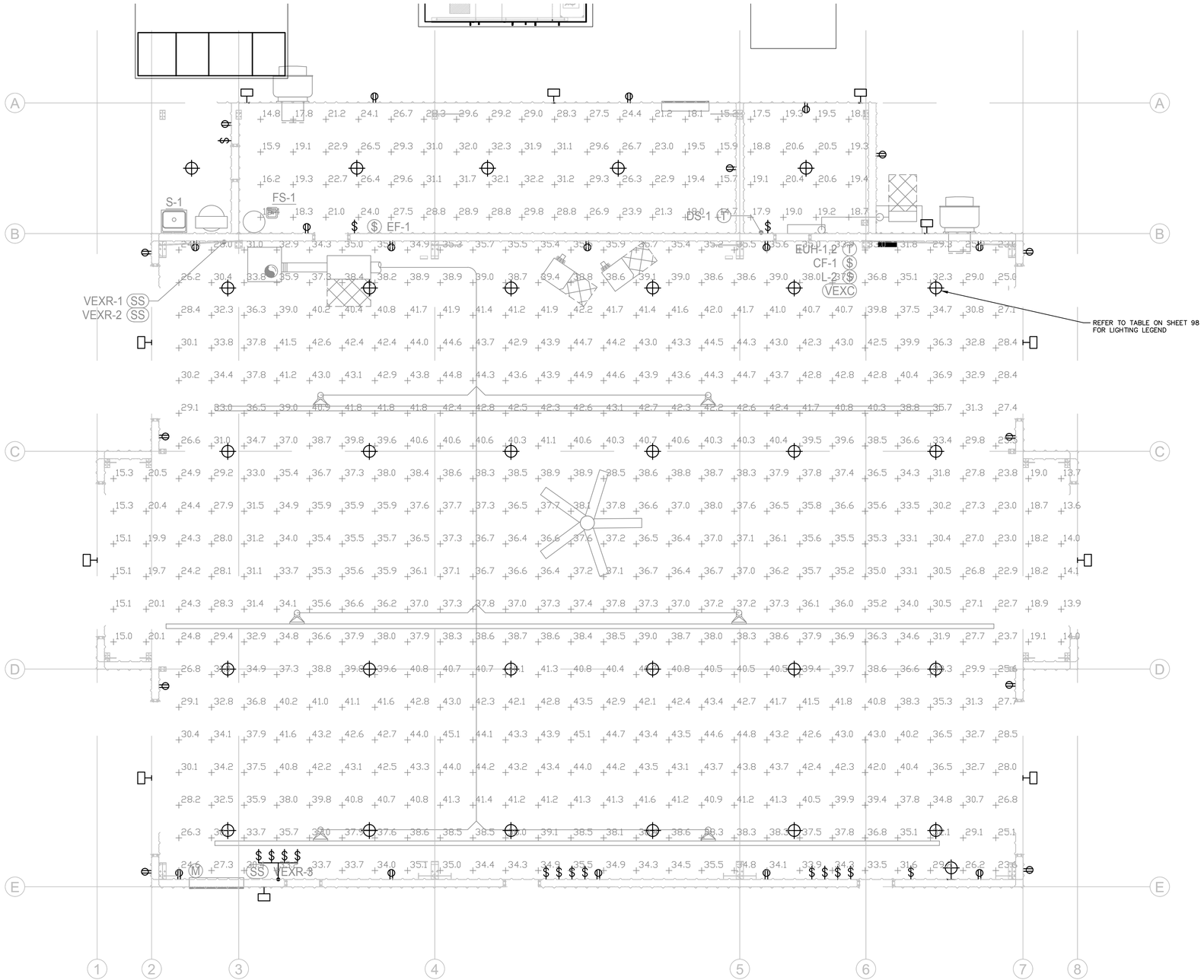

GENERAL NOTES:

1. SEE ELECTRICAL SYMBOLS AND GENERAL NOTES ON SHEET 87.

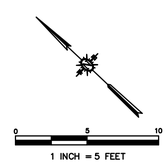

REV.	DESCRIPTION	CK'D	APP	DATE
2	ISSUED FOR BID	DP/DR	-	04/07/26
1	ISSUED FOR REVIEW	DP/DR	-	12/19/25
0	ISSUED FOR BID	AM/DR	-	06/11/25

PUBLIC WORKS DEPARTMENT ENGINEERING DIVISION

CITY OF SAN BUENAVENTURA

FIRE STATION NO. 7

PHOTOMETRICS PLAN - INTERIOR

DRN. BY: AM | DES. BY: AM | CK'D. BY: AM/DR

PRINCIPAL ENGINEER — DATE: 5 May 2026

CITY ENGINEER — DATE: 5/7/2026

SPEC. NUMBER 2025-010 | PROJECT NUMBER FA11-1061

June 11, 2025 | SHEET 102 OF151 | DWG. NO. 2025-D-010

REGISTERED PROFESSIONAL ENGINEER
DINESH BABU PEERAMSETTY
NO. 21736
ELECTRICAL
STATE OF CALIFORNIA

04/07/26

Cannon
60 S. California Street, Suite 401
Ventura, CA 93001
P 805.503.4590 F 805.544.3863

THESE DRAWINGS ARE INSTRUMENTS OF SERVICE AND ARE THE PROPERTY OF CANNON. ALL DESIGNS AND INFORMATION ON THESE DRAWINGS ARE FOR USE OF THE SPECIFIED PROJECT AND SHALL NOT BE USED OTHERWISE OR REPRODUCED WITHOUT THE EXPRESSED WRITTEN PERMISSION OF CANNON.

F:\proj\2023\230644\4 Production and Drafting\Const Dwgs\IE\Electrical Drawings\IE230644SP0001.dwg 4-06-26 03:59:14 PM MichelleA

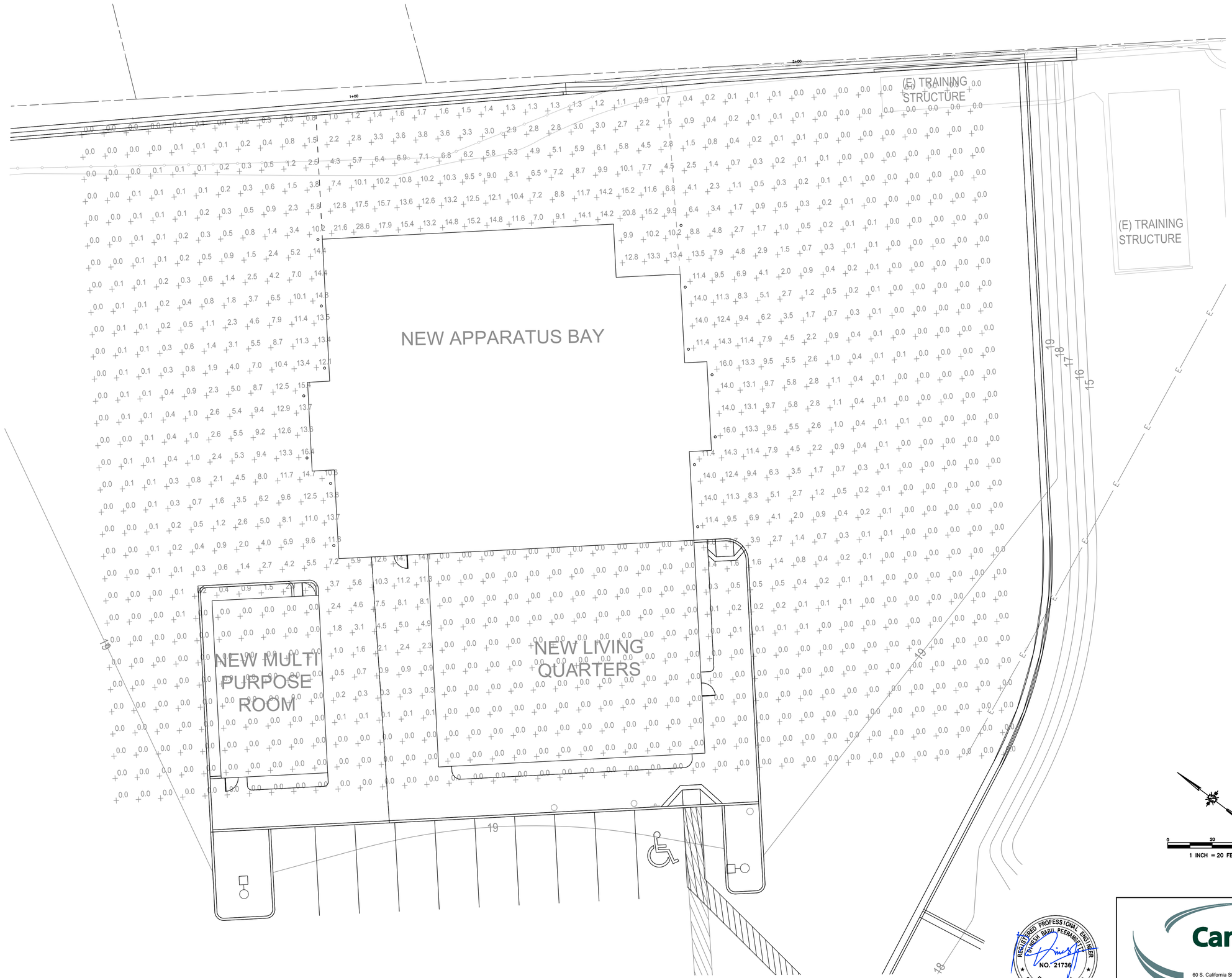

GENERAL NOTES:

1. SEE ELECTRICAL SYMBOLS AND GENERAL NOTES ON SHEET 87.

REGISTERED PROFESSIONAL ENGINEER
DANESH BABIL PEERMOHAMED
NO. 21736
ELECTRICAL
STATE OF CALIFORNIA
04/07/26

Cannon
60 S. California Street, Suite 401
Ventura, CA 93001
P 805.503.4590 F 805.544.3863

THESE DRAWINGS ARE INSTRUMENTS OF SERVICE AND ARE THE PROPERTY OF CANNON. ALL DESIGNS AND INFORMATION ON THESE DRAWINGS ARE FOR USE OF THE SPECIFIED PROJECT AND SHALL NOT BE USED OTHERWISE OR REPRODUCED WITHOUT THE EXPRESSED WRITTEN PERMISSION OF CANNON.

REV.	DESCRIPTION	CK'D	APP	DATE
2	ISSUED FOR BID	DP/DR	-	04/07/26
1	ISSUED FOR REVIEW	DP/DR	-	12/19/25
0	ISSUED FOR BID	AM/DR	-	06/11/25

PUBLIC WORKS DEPARTMENT ENGINEERING DIVISION
CITY OF SAN BUENAVENTURA

FIRE STATION NO. 7
PHOTOMETRICS PLAN - EXTERIOR

DRN. BY: AM | DES. BY: AM | CK'D. BY: AM/DR

PRINCIPAL ENGINEER — DATE: 5 May 2026

CITY ENGINEER — DATE: 5/7/2026

SPEC. NUMBER 2025-010 | PROJECT NUMBER FA11-1061

June 11, 2025 | SHEET 103OF151 | DWG. NO. 2025-D-010

F:\proj\2023\230644\4 Production and Drafting\Const Dwgs\E\Electrical Drawings\E230644SP0001.dwg 4-06-26 03:59:21 PM MichelleA

CONSTRUCTION NOTES:

1. SEE SINGLE LINE DIAGRAM ON SHEET 88 FOR EQUIPMENT DETAILS.
2. PANELBOARD IS TO BE PROVIDED BY GLOBAL MODULAR INC. AS PART OF LIVING QUARTER OR GYM MODULAR BUILDING PACKAGE. CONTRACTOR SHALL VERIFY EXACT PANELBOARD LOCATION PRIOR TO FEEDER CONDUIT/WIRE INSTALLATION.
3. LIGHT POLE, SEE CITY'S CIVIL PLANS FOR DETAILS.
4. 13"x24" CONCRETE, TRAFFIC-RATED PULL BOX, JENSEN PRECAST HT1324, OR APPROVED EQUAL.
5. APPROXIMATE LOCATION OF (E) ACCESS GATE MOTOR/CONTROLLER AND (N) FIRE STATION ACCESS PUSH BUTTON/DOORBELL. CONTRACTOR SHALL FIELD VERIFY EXACT LOCATION.
6. TRUCK WASH DOWN CONTROL PANEL, SEE CITY PLANS FOR DETAILS. CONTRACTOR SHALL FIELD VERIFY EXACT LOCATION.
7. PRESSURE WASHER RECEPTACLE, OUTDOOR, NEMA 5-20R GFCI, INDUSTRIAL GRADE, DUPLEX RECEPTACLE WITH WEATHERPROOF, COVER-IN-USE BOX.
8. TERMINATE CONDUIT FOR FUTURE LEVEL 2, DUAL-PORT, POWER SHARE EV CHARGER AT 10"x17" CONCRETE PULL BOX, JENSEN PRECAST HT1017, OR APPROVED EQUAL. CONTRACTOR SHALL FIELD VERIFY EXACT LOCATION AND CONFIRM LOCATION WITH THE CITY.
9. APPROXIMATE LOCATION OF FIRE STATION ALERT SYSTEM, PHOENIX G2 ATX, CONTROLLER, LOCATED IN LIVING QUARTERS BUILDING. CONTRACTOR SHALL FIELD VERIFY EXACT LOCATION WITH THE CITY AND FIRE SYSTEM INTEGRATOR/CONTRACTOR PRIOR TO CONDUIT INSTALLATION. CONTRACTOR SHALL INSTALL NEW CONDUIT FROM FIRE STATION ALERT SYSTEM CONTROLLER TO PUSH BUTTON/DOORBELL AT FRONT GATE FOR ACCESS, PER CITY DIRECTION.
10. 94"x72" PRE-CAST CONCRETE PAD FOR SCE PAD-MOUNTED TRANSFORMER. PRE-CAST CONCRETE PAD SHALL BE JENSEN PRECAST, OR SCE APPROVED EQUAL. INSTALL PER SCE PLANS AND STANDARDS WITH REQUIRED CLEARANCES. INSTALL PROTECTIVE BOLLARDS AROUND SCE PAD-MOUNTED TRANSFORMER PER SCE PLANS AND STANDARDS. SEE SCE PLANS FOR PRIMARY AND SECONDARY SERVICE CONDUCTOR/CONDUIT DETAILS.
11. SEE STRUCTURAL DRAWINGS FOR EQUIPMENT SUPPORT AND FOUNDATION DETAILS.
12. (E) SCE TEMPORARY SERVICE POLE SHALL BE REMOVED AS PART OF SCE SCOPE OF WORK. CONTRACTOR SHALL COORDINATE WITH SCE AND THE CITY FOR DEMOLITION OF (E) TEMPORARY SERVICE PANEL PRIOR TO INSTALLATION OF (N) TX-TF AND PANEL 'TF'.
13. INSTALL #4 GND FROM (N) TX-TF TO (N) GROUND ROD/BOX.
14. CONTRACTOR SHALL STUBUP THE UNDERGROUND ROUTED CONDUIT ALONG THE BUILDING WALL EDGE AND SUPPORT VERTICALLY TO THE WALL, PENETRATE INTO THE BUILDING, AND ROUTE THE CONDUIT IN THE CEILING. REFER TO WALL PENETRATION DETAIL ON SHEET 101 DETAIL 7.
15. CONTRACTOR SHALL INSTALL PULL BOX 3' X 5' PRECAST CONCRETE, PER SCE UGS STANDARD HP-225. CONTRACTOR SHALL PROCURE AND INSTALL PULL BOX PER SCE UGS STANDARDS AND REQUIREMENTS. CONTRACTOR SHALL SCHEDULE THE INSPECTIONS PER SCE REQUIREMENTS. REFER TO SCE DRAWING OF SERVICE REQUEST #4044496 PROJECT #3166536 FOR DETAILS. EXACT LOCATION SHALL BE PER SCE DRAWING OF SERVICE REQUEST #4044496 PROJECT #3166536. INSTALL GROUND ROD FOR THE PULL BOX PER SCE UGS STANDARD AC-700. PULL BOX SHALL BE INSTALLED PER SCE UGS STANDARD CD 135.
16. CONTRACTOR SHALL INSTALL (1) 4"C (INCLUDING ONE SPARE) FROM THE (N) VAULT VIA (N) PULL BOX TO THE SCE TRANSFORMER AS PER THE PLANS. CONDUIT, SWEEPS, TRENCHING DEPTH AND BACK FILL MATERIAL SHALL BE PER SCE REQUIREMENTS. CONTRACTOR SHALL COORDINATE AND SCHEDULE THE INSPECTIONS AS PER SCE REQUIREMENTS. REFER TO SCE DRAWING OF SERVICE REQUEST #4044496 PROJECT # 3166536 FOR DETAILS.
17. CONTRACTOR SHALL PROCURE AND INSTALL THE PRECAST TUB TYPE VAULT WITH COVER RESTRAINTS SEE SCE UGS VA 410 STANDARD VAULT DETAILS. CONTRACTOR SHALL INSTALL AND SCHEDULE THE INSPECTIONS PER SCE REQUIREMENTS AND EXACT LOCATION SHALL BE AS PER THE SCE DRAWINGS OF SERVICE REQUEST #4044496, PROJECT #3166536 AND UGS STANDARDS.
18. (1) 4"C – CONTRACTOR SHALL INSTALL THE CONDUIT PER SCE UGS STANDARDS AND PER DRAWINGS OF SERVICE REQUEST #4044496, PROJECT #3166536, BETWEEN INTERCEPT LOCATION OF THE (E) SCE PRIMARY CONDUIT AND (N) VAULT. CONTRACTOR SHALL COORDINATE WITH SCE FOR THE FINAL CONNECTIONS AT THE INTERCEPT LOCATION. CONTRACTOR SHALL WORK WITH SCE TO PREPARE A CONSTRUCTION SCHEDULE. CONTRACTOR SHALL PROVIDE DETAILED SEQUENCE OF WORK PLAN TO CITY FOR APPROVAL PRIOR TO CONSTRUCTION. THIS PLAN SHALL INCLUDE THE CONSTRUCTION SEQUENCE, SCE COORDINATION, TRAFFIC CONTROL, STAGING PLAN AND CONSTRUCTION SCHEDULE.
19. (1) 4"C – CONTRACTOR SHALL INSTALL THE CONDUIT PER SCE UGS STANDARD AND PER DRAWINGS OF SERVICE REQUEST #4044496, PROJECT 3166536, BETWEEN (N) VAULT TO (N) SERVICE EQUIPMENT INSIDE PROPERTY LINE.
20. CONTRACTOR SHALL PERFORM POTHOLING ON THE PERIMETER, WHERE VAULT IS TO BE INSTALLED.

GENERAL NOTES:

1. SEE ELECTRICAL SYMBOLS AND GENERAL NOTES ON SHEET 87.
2. SEE CONDUIT AND CABLE SCHEDULE ON SHEET 100.
3. SCE SCOPE OF WORK IS SHOWN FOR BIDDING PURPOSES ONLY. CONTRACTOR SHALL CONFIRM ALL SCE WORK WITH SCE PLANNER/INSPECTOR, AND INSTALL ALL SCE FACILITIES PER SCE PLANS AND STANDARDS.

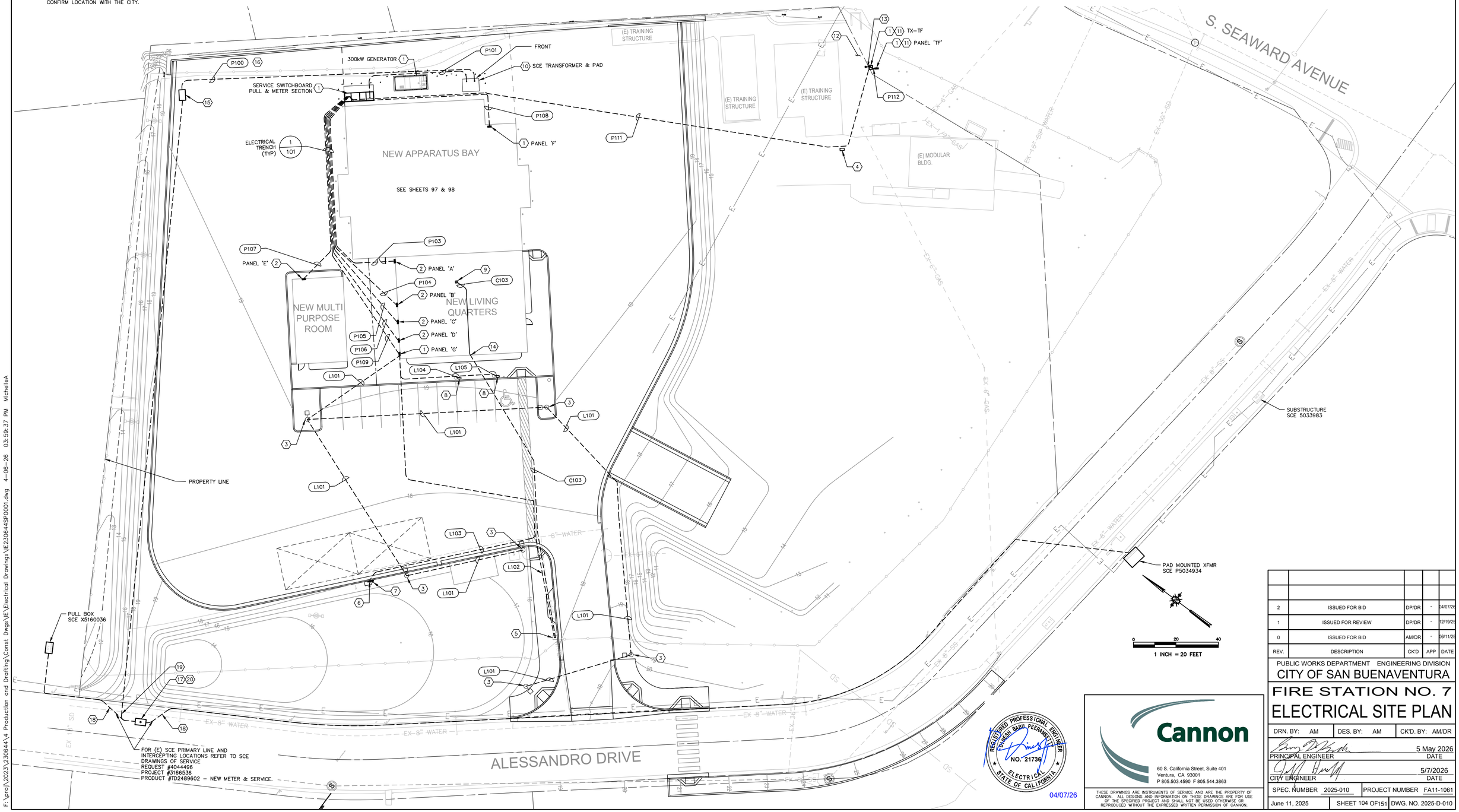

REV.	DESCRIPTION	CK'D	APP	DATE
2	ISSUED FOR BID	DP/DR	-	04/07/26
1	ISSUED FOR REVIEW	DP/DR	-	12/19/25
0	ISSUED FOR BID	AM/DR	-	06/11/25

PUBLIC WORKS DEPARTMENT ENGINEERING DIVISION
CITY OF SAN BUENAVENTURA

FIRE STATION NO. 7
ELECTRICAL SITE PLAN

DRN. BY: AM | DES. BY: AM | CK'D. BY: AM/DR

PRINCIPAL ENGINEER — DATE: 5 May 2026

CITY ENGINEER — DATE: 5/7/2026

SPEC. NUMBER 2025-010 | PROJECT NUMBER FA11-1061

June 11, 2025 | SHEET 104 OF 151 | DWG. NO. 2025-D-010

REGISTERED PROFESSIONAL ENGINEER DUNCAN BABU PEERMOHAMED NO. 21736 ELECTRICAL STATE OF CALIFORNIA
04/07/26

Cannon
60 S. California Street, Suite 401
Ventura, CA 93001
P 805.503.4590 F 805.544.3863

THESE DRAWINGS ARE INSTRUMENTS OF SERVICE AND ARE THE PROPERTY OF CANNON. ALL DESIGNS AND INFORMATION ON THESE DRAWINGS ARE FOR USE OF THE SPECIFIED PROJECT AND SHALL NOT BE USED OTHERWISE OR REPRODUCED WITHOUT THE EXPRESSED WRITTEN PERMISSION OF CANNON.

F:\pro\2023\230644\4 Production and Drafting\Const Dwgs\E\Electrical Drawings\E230644SP0001.dwg 4-06-26 03:59:37 PM MichelleA

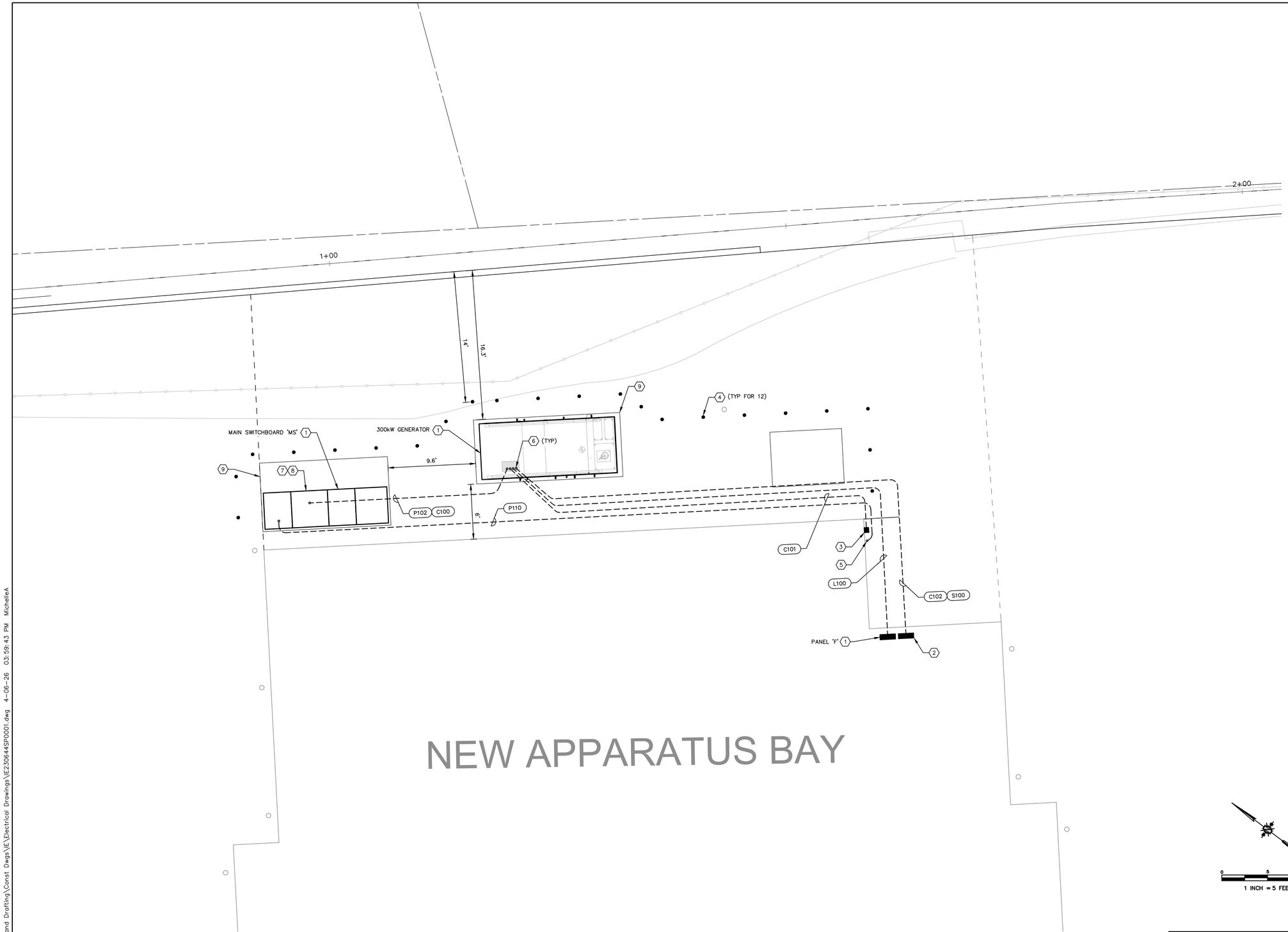

GENERAL NOTES:

1. SEE ELECTRICAL SYMBOLS AND GENERAL NOTES ON SHEET 87.
2. SEE CONDUIT AND CABLE SCHEDULE ON SHEET 100.

CONSTRUCTION NOTES:

1. SEE SINGLE LINE DIAGRAM ON SHEET 88 FOR EQUIPMENT DETAILS.
2. GENERATOR REMOTE ANNUNCIATOR PANEL, FURNISHED WITH GENERATOR, INSTALLED ON APPARATUS BAY INTERIOR WALL AND PER VENDOR INSTRUCTIONS.
3. GENERATOR REMOTE E-STOP BUTTON IN WEATHERPROOF BOX, FURNISHED WITH GENERATOR, MOUNTED ON APPARATUS BAY EXTERIOR WALL. PROVIDE SIGNAGE PER NEC.
4. INSTALL NEW PROTECTIVE BOLLARD AROUND MAIN SWITCHBOARD OR AND GENERATOR. BOLLARDS INSTALLED AROUND MAIN SWITCHBOARD SHALL BE PER SCE ESR-3, PAGE 3-21 AND APPROVED BY SCE PRIOR TO INSTALLATION. BOLLARDS INSTALLED AROUND GENERATOR SHALL BE REMOVABLE BOLLARDS PER DETAIL 6 ON SHEET 101. REMOVABLE BOLLARDS SHALL BE INSTALLED OUTSIDE OF GENERATOR MAINTENANCE/DOOR SWING/CLEARANCE AREA. COORDINATE EXACT LOCATIONS WITH THE CITY AND SCE PRIOR TO INSTALLATION. CONTRACTOR SHALL INSTALL THE BARRIERS TO PROTECT THE SCE SERVICE TRANSFORMER PER SCE UNDERGROUND STRUCTURES STANDARDS (UGS) MC 830. FINAL INSTALLATIONS SHALL BE FIELD APPROVED BY SCE UNDERGROUND INSPECTOR. MATERIAL FOR THE BARRIERS FOR THE SERVICE (MAIN SWITCHBOARD) AND SCE SERVICE TRANSFORMER SHALL MEET SCE UGS STANDARDS.
5. STUB-UP, CAP, AND TAG CONDUIT FOR FUTURE BATTERY CABINET.
6. FINAL CONNECTIONS TO THE GENERATOR SHALL BE MADE WITH LIQUIDTIGHT FLEXIBLE METAL CONDUIT. CONTRACTOR SHALL FIELD VERIFY EXACT GENERATOR STUB-UP LOCATIONS WITH THE MANUFACTURER.
7. PROVIDE REQUIRED SIGNAGE AT EXISTING SERVICE EQUIPMENT INDICATING TYPE AND LOCATION OF ON-SITE EMERGENCY POWER SOURCE, PER NEC ARTICLE 700.7(A).
8. CONTRACTOR SHALL VERIFY PROPER PHASE ROTATION INDICATION IS PROVIDED AT THE SERVICE EQUIPMENT.
9. SEE STRUCTURAL DRAWINGS FOR ELECTRICAL EQUIPMENT FOUNDATION DESIGN.

0 5 10
1 INCH = 5 FEET

REGISTERED PROFESSIONAL ENGINEER
DINESH BABU PEERAMSETTY
NO. 21736
ELECTRICAL
STATE OF CALIFORNIA
04/07/26

Cannon
60 S. California Street, Suite 401
Ventura, CA 93001
P 805.503.4590 F 805.544.3863

THESE DRAWINGS ARE INSTRUMENTS OF SERVICE AND ARE THE PROPERTY OF CANNON. ALL DESIGNS AND INFORMATION ON THESE DRAWINGS ARE FOR USE OF THE SPECIFIED PROJECT AND SHALL NOT BE USED OTHERWISE OR REPRODUCED WITHOUT THE EXPRESSED WRITTEN PERMISSION OF CANNON.

REV.	DESCRIPTION	CK'D	APP	DATE
2	ISSUED FOR BID	DP/DR	-	04/07/26
1	ISSUED FOR REVIEW	DP/DR	-	12/19/25
0	ISSUED FOR BID	AM/DR	-	06/11/25

PUBLIC WORKS DEPARTMENT ENGINEERING DIVISION
CITY OF SAN BUENAVENTURA

FIRE STATION NO. 7
GENERATOR ELECTRICAL PLAN

DRN. BY: AM | DES. BY: AM | CK'D. BY: AM/DR

PRINCIPAL ENGINEER — DATE: 5 May 2026

CITY ENGINEER — DATE: 5/7/2026

SPEC. NUMBER 2025-010 | PROJECT NUMBER FA11-1061

June 11, 2025 | SHEET 105 OF 151 | DWG. NO. 2025-D-010

F:\proj\2023\230644\4 Production and Drafting\Const Dwgs\IE\Electrical Drawings\IE230644SP0001.dwg 4-06-26 03:59:43 PM MichelleA

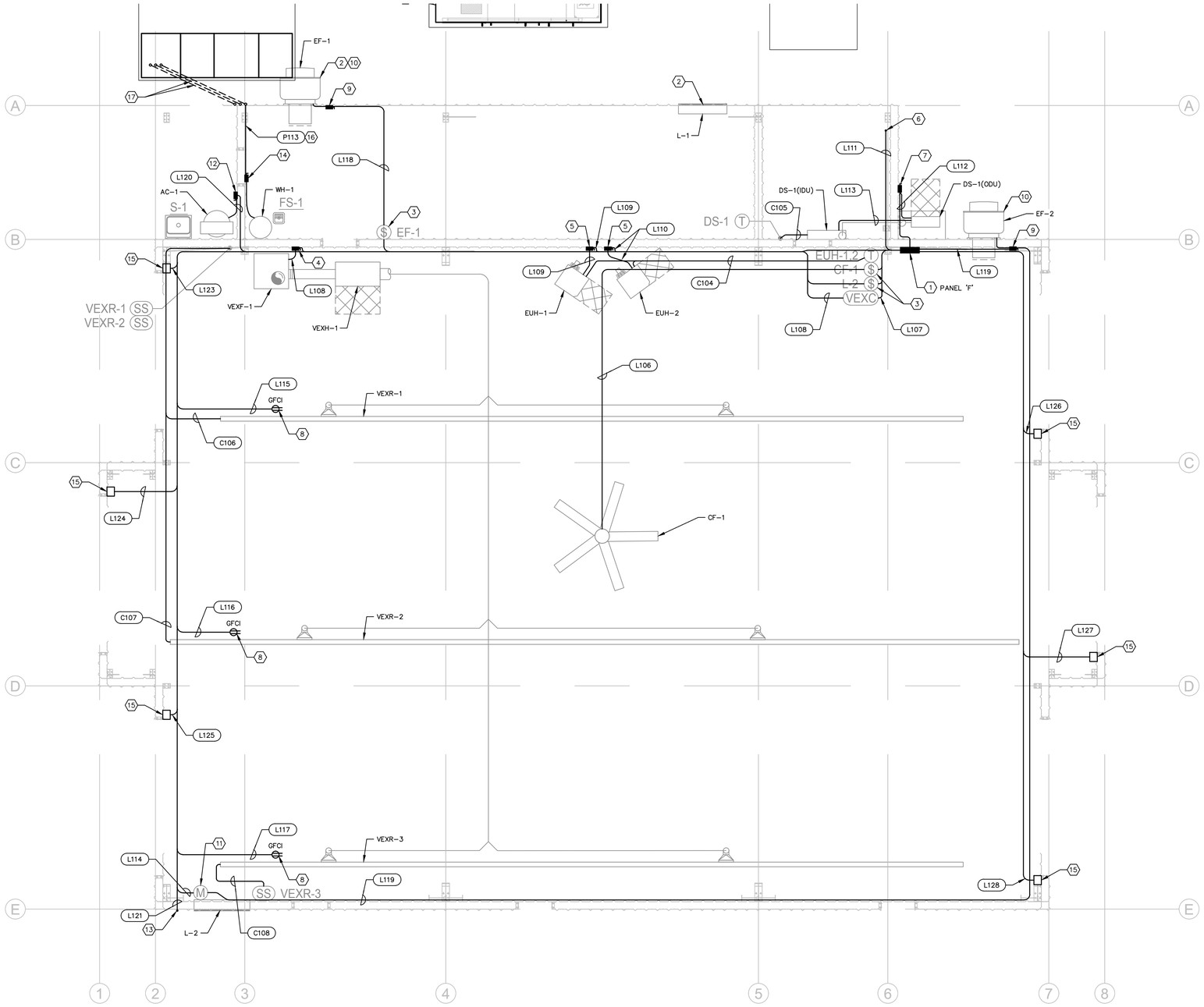

GENERAL NOTES:

1. SEE ELECTRICAL SYMBOLS AND GENERAL NOTES ON SHEET 87.
2. SEE CONDUIT AND CABLE SCHEDULE ON SHEET 100.
3. SEE MECHANICAL AND PLUMBING PLANS FOR EQUIPMENT DETAILS.

CONSTRUCTION NOTES:

1. SEE SINGLE LINE DIAGRAM ON SHEET 88 FOR EQUIPMENT DETAILS.
2. GENERATOR SHALL MAINTAIN A MINIMUM 10' CLEARANCE FROM THE INTAKE LOUVER AND EXHAUST FAN.
3. 15A, 120VAC, SINGLE-POLE TOGGLE SWITCH, HORSEPOWER RATED, INDUSTRIAL GRADE, EXTRA HEAVY DUTY.
4. 30A, 240VAC, 3-POLE, 3-WIRE, NON-FUSIBLE, NEMA 1, HEAVY DUTY SAFETY SWITCH, SQUARE-D, EATON, OR APPROVED EQUAL.
5. 60A, 240VAC, 3-POLE, 3-WIRE, NON-FUSIBLE, NEMA 1, HEAVY DUTY SAFETY SWITCH, SQUARE-D, EATON, OR APPROVED EQUAL.
6. STUB, CAP AND TAG CONDUIT FOR (F) SCBA FILL STATION. FIELD VERIFY EXACT LOCATION OF CONDUIT STUB-OUT WITH THE CITY.
7. 30A, 240VAC, 2-POLE, 2-WIRE, NON-FUSIBLE, NEMA 3R, HEAVY DUTY SAFETY SWITCH, SQUARE-D, EATON, OR APPROVED EQUAL.
8. CONTRACTOR SHALL PROVIDE AND INSTALL 15A, 120V, INDUSTRIAL GRADE, EXTRA HEAVY DUTY, GFCI RECEPTACLE ON LAST RAIL UPRIGHT CLOSEST TO THE ENTRY SIDE OF THE APPARATUS BAY PER RAIL, MAX 48" ABOVE THE RAIL. SEE MECHANICAL PLANS AND INSTALLATION DETAILS. COORDINATE EXACT LOCATION WITH VEHICLE EXHAUST SYSTEM (VEX SYSTEM) CONTRACTOR.
9. 30A, 120VAC, 1-POLE, 2-WIRE WITH FACTORY INSTALLED NEUTRAL, NON-FUSIBLE, NEMA 1, HEAVY DUTY SAFETY SWITCH, SQUARE-D, EATON, OR APPROVED EQUAL.
10. EXHAUST FAN SHALL HAVE INTERNAL THERMAL/OVERLOAD PROTECTION, PER MECHANICAL PLANS.
11. SEE MECHANICAL PLANS FOR FAN INTERLOCK WITH DAMPER CONTROL DETAIL WIRING DIAGRAM.
12. 60A, 240VAC, 2-POLE, 2-WIRE, NON-FUSIBLE, NEMA 3R, HEAVY DUTY SAFETY SWITCH, SQUARE-D, EATON, OR APPROVED EQUAL.
13. STUB, CAP AND TAG CONDUIT FOR (F) DETOX SAUNA. FIELD VERIFY EXACT LOCATION OF CONDUIT STUB-OUT WITH THE CITY.
14. 70A, 240VAC, 3-POLE, 3-WIRE, NON-FUSIBLE, NEMA 1, HEAVY DUTY SAFETY SWITCH, SQUARE-D, EATON, OR APPROVED EQUAL.
15. APPARATUS BAY ROLL-UP GARAGE DOOR ELECTRIC OPERATOR. COORDINATE EXACT LOCATION WITH CLEARSPAN PRIOR TO CONDUIT AND WIRE INSTALLATION.
16. CONDUIT SHALL BE ROUTED UNDERGROUND AND STUBUP TO THE EDGE OF THE BUILDING WALL, ROUTE VERTICALLY ALONG THE WALL, PENETRATE INTO THE BUILDING AND ROUTED ALONG THE WALL TO THE WATER HEATER. CONDUIT SHALL BE SUPPORTED PER NEC ARTICLE 344.30.
17. (2) – 2"C – SPARE CONDUITS ROUTED FROM THE SWITCHBOARD DISTRIBUTION SECTION TO STUBUP TO THE EDGE OF THE BUILDING WALL AND CAP OFF 6" ABOVE GROUND FOR FUTURE USE.

0 5 10
1 INCH = 5 FEET

REGISTERED PROFESSIONAL ENGINEER
DANESH BABUL PEERMOHAMED
NO. 21736
ELECTRICAL
STATE OF CALIFORNIA
04/07/26

Cannon
60 S. California Street, Suite 401
Ventura, CA 93001
P 805.503.4590 F 805.544.3863

THESE DRAWINGS ARE INSTRUMENTS OF SERVICE AND ARE THE PROPERTY OF CANNON. ALL DESIGNS AND INFORMATION ON THESE DRAWINGS ARE FOR USE OF THE SPECIFIED PROJECT AND SHALL NOT BE USED OTHERWISE OR REPRODUCED WITHOUT THE EXPRESSED WRITTEN PERMISSION OF CANNON.

REV.	DESCRIPTION	CK'D	APP	DATE
2	ISSUED FOR BID	DP/DR	-	04/07/26
1	ISSUED FOR REVIEW	DP/DR	-	12/19/25
0	ISSUED FOR BID	AM/DR	-	06/11/25

PUBLIC WORKS DEPARTMENT ENGINEERING DIVISION
CITY OF SAN BUENAVENTURA

FIRE STATION NO. 7
APPARATUS BAY ELECTRICAL PLAN

DRN. BY: AM	DES. BY: AM	CK'D. BY: AM/DR

PRINCIPAL ENGINEER — DATE: 5 May 2026
CITY ENGINEER — DATE: 5/7/2026

SPEC. NUMBER 2025-010	PROJECT NUMBER FA11-1061
June 11, 2025 — SHEET 106 OF151	DWG. NO. 2025-D-010

F:\proj\2023\230644\4 Production and Drafting\Const Dwgs\E\Electrical Drawings\E230644SP0001.dwg 4-06-26 03:59:49 PM MichelleA

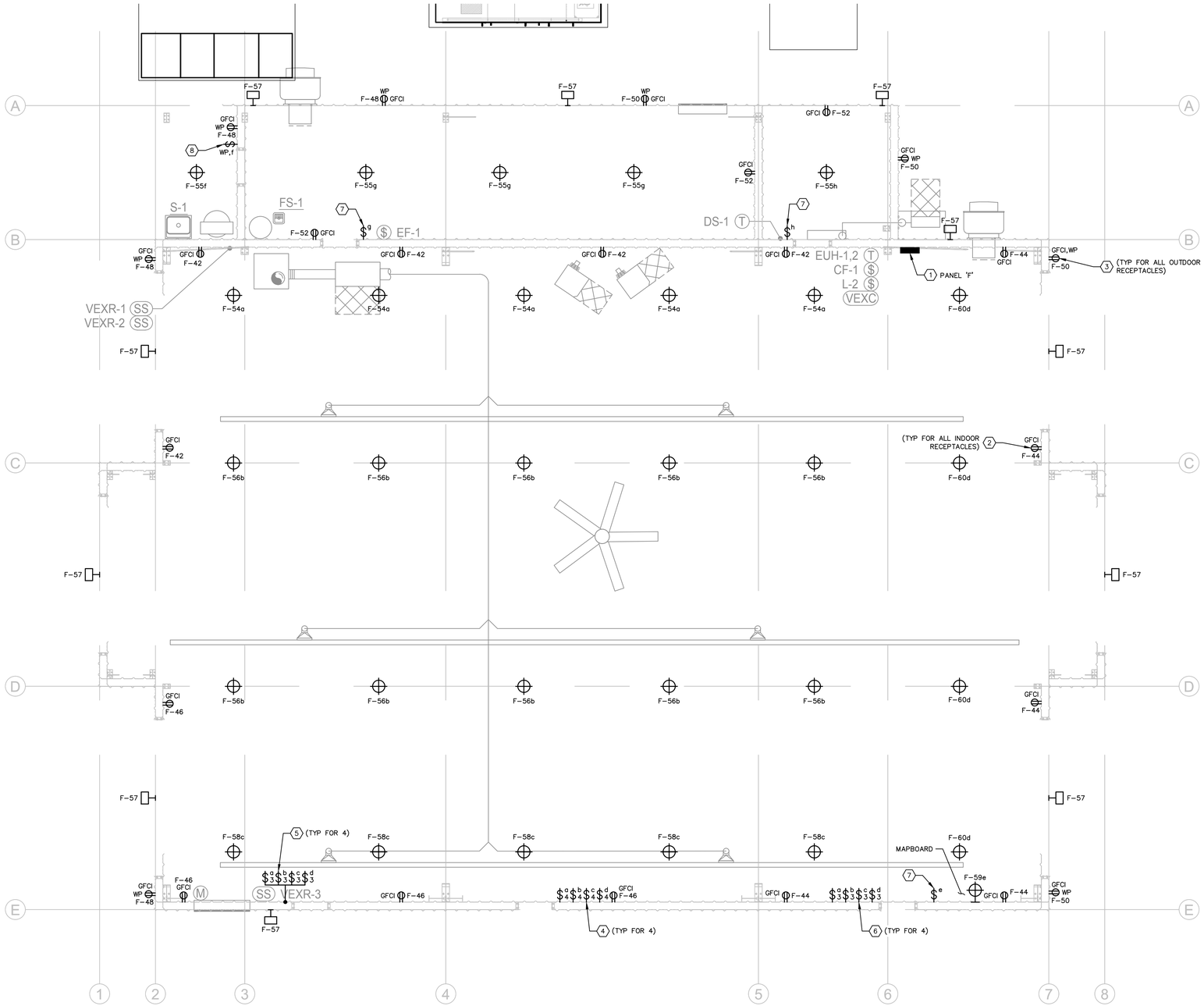

GENERAL NOTES:

1. SEE ELECTRICAL SYMBOLS AND GENERAL NOTES ON SHEET 87.
2. LIGHT FIXTURE LOCATIONS AND MOUNTING HEIGHTS SHALL BE COORDINATED WITH THE CITY, BUILDING MANUFACTURER, VENDOR, AND HVAC/VEX SYSTEM CONTRACTORS PRIOR TO INSTALLATION TO AVOID INTERFERENCE WITH OTHER EQUIPMENT.
3. CONTRACTOR SHALL COORDINATE WITH LIGHTING AND LIGHTING CONTROLS VENDOR TO ENSURE ALL WIRING (INCLUDING DIMMER CONTROL) AND DEVICES ARE INSTALLED FOR A COMPLETE, WORKING SYSTEM.

CONSTRUCTION NOTES:

1. SEE SINGLE LINE DIAGRAM ON SHEET 88 FOR EQUIPMENT DETAILS.
2. 20A, 120V, NEMA 5-20R, GFCI DUPLEX RECEPTACLE OUTLET, HEAVY-DUTY INDUSTRIAL SPECIFICATION GRADE, TAMPER-RESISTANT.
3. 20A, 120V, NEMA 5-20R, GFCI DUPLEX RECEPTACLE OUTLET, HEAVY-DUTY INDUSTRIAL SPECIFICATION GRADE, TAMPER-RESISTANT, WITH OUTDOOR, WEATHERPROOF, COVER-IN-USE BOX.
4. 20A, 120V, TOGGLE OR ROCKER 4-WAY AC QUIET SWITCH, COMMERCIAL/INDUSTRIAL GRADE.
5. 20A, 120V, TOGGLE OR ROCKER 3-WAY AC QUIET SWITCH, COMMERCIAL/INDUSTRIAL GRADE.
6. 20A, 120V, TOGGLE OR ROCKER 3-WAY AC QUIET SWITCH WITH 0-10V DIMMER, COMMERCIAL/INDUSTRIAL GRADE.
7. 20A, 120V, TOGGLE OR ROCKER SINGLE-POLE AC QUIET SWITCH WITH 0-10V DIMMER, COMMERCIAL/INDUSTRIAL GRADE.
8. 20A, 120V, TOGGLE OR ROCKER SINGLE-POLE AC QUIET SWITCH WITH 0-10V DIMMER, COMMERCIAL/INDUSTRIAL GRADE, WITH WEATHERPROOF BOX.

LIGHTING FIXTURE SCHEDULE

SYMBOL	NOTES	FIXTURE SPECIFICATIONS	LAMP	FIXTURE MANUFACTURER
⊕	1, 2, 3, 5	PETROLUX LED LOW BAY LIGHT FIXTURE, WITH OCCUPANCY SENSOR, UNIVERSAL OR PENDANT MOUNT FROM CEILING	LED 4000K 8000LM 58W	HOLOPHANE PXLW 8000LM MDU5 MVOLT 40K 70CRI UNM HKMW SBGR10 DWHXD
⊕	1, 2, 3, 6	PETROLUX LED LOW BAY LIGHT FIXTURE, WITH OCCUPANCY SENSOR, UNIVERSAL ARM FOR WALL MOUNT	LED 4000K 5000LM 35W	HOLOPHANE PXLW 5000LM MDU5 MVOLT 40K 70CRI UNM SBGR10 P3US DWHXD
⊤	1, 2, 4, 5	EXTERIOR, WALL-MOUNTED LED FLOOD LUMINAIRE, WITH INTEGRAL PHOTOCELL AND MOTION SENSOR CONTROL	LED 4000K 7489LM 52W	LITHONIA DSXF2 LED P1 40K 70CRI WFL MVOLT IS PE DWHXD ACCESSORIES: FRWB DWHXD U; SBOR FOR OUTDOOR MOTION SENSOR

NOTES:
1. ALL FIXTURES SHALL COMPLY WITH TITLE 24 REQUIREMENTS AND CEC ARTICAL 410.
2. FINISH OF ALL FIXTURES AND POLES SHALL BE CONFIRMED WITH OWNER BEFORE ORDERING. MOUNTING ACCESSORIES AND INSTALLATION DETAILS SHALL BE CONFIRMED WITH VENDOR PRIOR TO PROCUREMENT AND INSTALLATION.
3. INDOOR FIXTURES SHALL BE CONTROLLED BY TOGGLE/DIMMER SWITCHES AND INTEGRAL MOTION SENSOR.
4. OUTDOOR BUILDING FIXTURES SHALL BE CONTROLLED BY INTEGRAL PHOTOCELL AND MOTION SENSOR. CONTRACTOR SHALL FIELD VERIFY MOUNTING ANGLE WITH OWNER.
5. MOUNTING HEIGHT SHALL BE +/- 15 FEET ABOVE FINISHED FLOOR TO LIGHT SOURCE, UNLESS NOTED OTHERWISE. CONTRACTOR SHALL FIELD VERIFY MOUNTING HEIGHT WITH OWNER, BUILDING MANUFACTURER, AND VENDOR PRIOR TO INSTALLATION.
6. MOUNTING HEIGHT SHALL BE +/- 9 FEET ABOVE FINISHED FLOOR TO LIGHT SOURCE, UNLESS NOTED OTHERWISE. CONTRACTOR SHALL FIELD VERIFY MOUNTING HEIGHT WITH OWNER, BUILDING MANUFACTURER, AND VENDOR PRIOR TO INSTALLATION.

0 5 10
1 INCH = 5 FEET

REGISTERED PROFESSIONAL ENGINEER DANISH SABIL PEERMOHAMED NO. 21736 ELECTRICAL STATE OF CALIFORNIA
04/07/26

Cannon
60 S. California Street, Suite 401
Ventura, CA 93001
P 805.503.4590 F 805.544.3863

THESE DRAWINGS ARE INSTRUMENTS OF SERVICE AND ARE THE PROPERTY OF CANNON. ALL DESIGNS AND INFORMATION ON THESE DRAWINGS ARE FOR USE OF THE SPECIFIED PROJECT AND SHALL NOT BE USED OTHERWISE OR REPRODUCED WITHOUT THE EXPRESSED WRITTEN PERMISSION OF CANNON.

REV.	DESCRIPTION	CK'D	APP	DATE
2	ISSUED FOR BID	DP/DR	-	04/07/26
1	ISSUED FOR REVIEW	DP/DR	-	12/19/25
0	ISSUED FOR BID	AM/DR	-	06/11/25

PUBLIC WORKS DEPARTMENT ENGINEERING DIVISION
CITY OF SAN BUENAVENTURA

FIRE STATION NO. 7
APPARATUS BAY POWER & LIGHTING PLAN

DRN. BY: AM | DES. BY: AM | CK'D. BY: AM/DR

PRINCIPAL ENGINEER — DATE 5 May 2026

CITY ENGINEER — DATE 5/7/2026

SPEC. NUMBER 2025-010 | PROJECT NUMBER FA11-1061

June 11, 2025 | SHEET 107OF151 | DWG. NO. 2025-D-010

F:\pro\2023\230644\4 Production and Drafting\Const Dwgs\E\Electrical Drawings\E230644SP0001.dwg 4-06-26 03:59:56 PM MichelleA

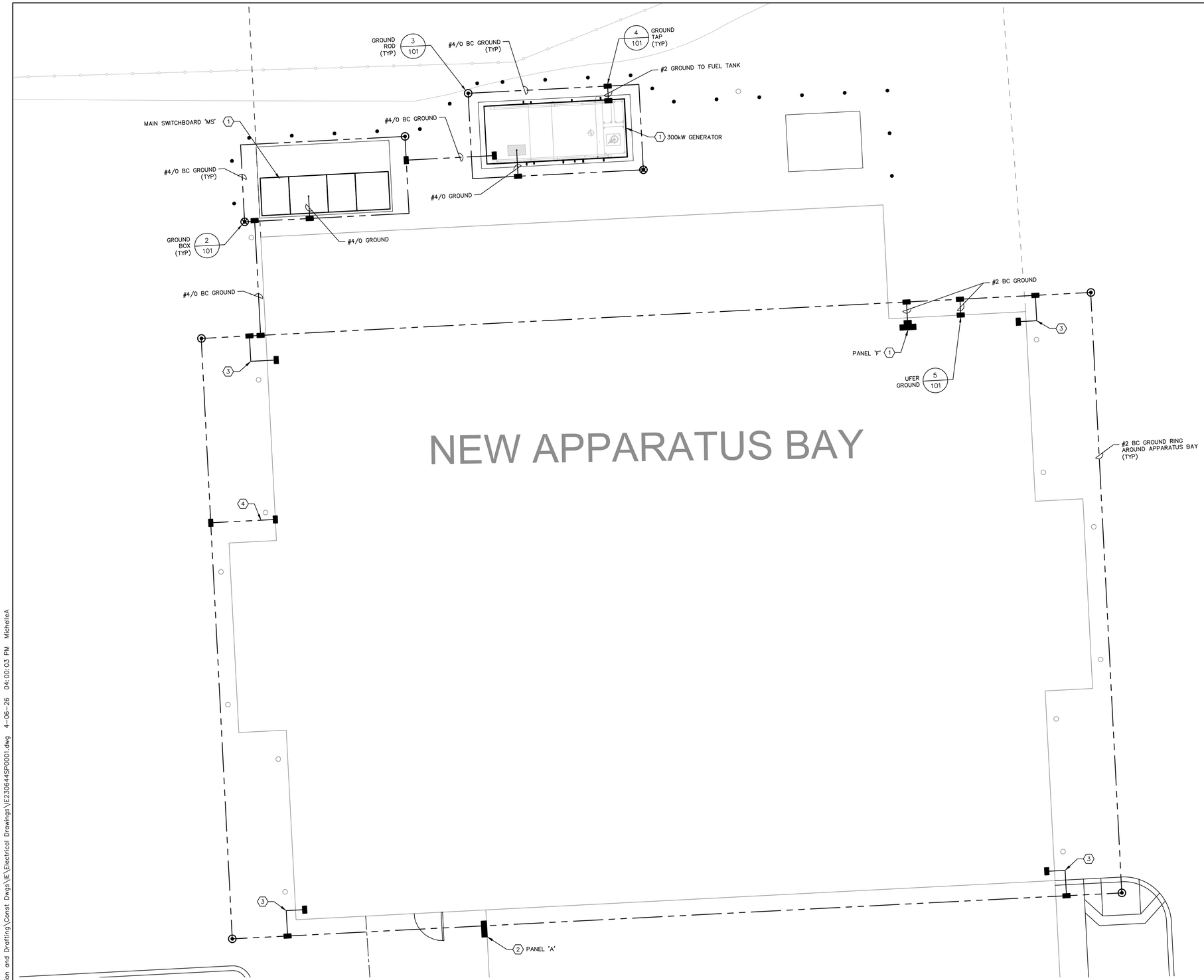

GENERAL NOTES:

1. SEE ELECTRICAL SYMBOLS AND GENERAL NOTES ON SHEET 87.
2. ALL GROUNDING AND BONDING SHALL BE INSTALLED IN ACCORDANCE WITH NEC ARTICLE 250.

CONSTRUCTION NOTES:

1. SEE SINGLE LINE DIAGRAM ON SHEET 88 FOR EQUIPMENT DETAILS.
2. PANELBOARD IS TO BE PROVIDED BY GLOBAL MODULAR INC. AS PART OF LIVING QUARTER OR GYM MODULAR BUILDING PACKAGE. CONTRACTOR SHALL VERIFY EXACT PANELBOARD LOCATION PRIOR TO FEEDER CONDUIT/WIRE INSTALLATION.
3. INSTALL #2 GROUND TO METAL BUILDING FRAME.
4. INSTALL #2 GROUND TO METAL WATER PIPE. SEE PLUMBING PLANS FOR BUILDING WATER SUPPLY ENTRY LOCATION.

0 5 10
1 INCH = 5 FEET

REGISTERED PROFESSIONAL ENGINEER
DINESH BABU PEERAMSETTY
NO. 21736
ELECTRICAL
STATE OF CALIFORNIA
04/07/26

Cannon
60 S. California Street, Suite 401
Ventura, CA 93001
P 805.503.4590 F 805.544.3863

THESE DRAWINGS ARE INSTRUMENTS OF SERVICE AND ARE THE PROPERTY OF CANNON. ALL DESIGNS AND INFORMATION ON THESE DRAWINGS ARE FOR USE OF THE SPECIFIED PROJECT AND SHALL NOT BE USED OTHERWISE OR REPRODUCED WITHOUT THE EXPRESSED WRITTEN PERMISSION OF CANNON.

REV.	DESCRIPTION	CK'D	APP	DATE
2	ISSUED FOR BID	DP/DR	-	04/07/26
1	ISSUED FOR REVIEW	DP/DR	-	12/19/25
0	ISSUED FOR BID	AM/DR	-	06/11/25

PUBLIC WORKS DEPARTMENT ENGINEERING DIVISION
CITY OF SAN BUENAVENTURA

FIRE STATION NO. 7
GROUNDING PLAN

DRN. BY: AM | DES. BY: AM | CK'D. BY: AM/DR

PRINCIPAL ENGINEER — DATE: 5 May 2026

CITY ENGINEER — DATE: 5/7/2026

SPEC. NUMBER 2025-010 | PROJECT NUMBER FA11-1061

June 11, 2025 | SHEET 108 OF 151 | DWG. NO. 2025-D-010

F:\proj\2023\230644\4 Production and Drafting\Const Dwgs\IE\Electrical Drawings\IE230644SP0001.dwg 4-06-26 04:00:03 PM MichelleA

CONDUIT & CABLE SCHEDULE

CONDUIT No.	Qty.	Size (In)	CONDUIT FILL	FROM	TO	COMMENTS
P-100	1	4	3/8" NYLON PULL CORD	SCE FACILITIES (SEE SCE PLANS FOR DETAILS)	SCE PAD-MOUNTED TRANSFORMER	CONDUIT QTY. & SIZE PER SCE PLANS, SEE SCE PLANS FOR DETAILS (SERVICE REQUEST #4044496 PROJECT #3166536)
P-101	4	4	3/8" NYLON PULL CORD	SCE PAD-MOUNTED TRANSFORMER	MAIN SWITCHBOARD 'MS' (PULL SECTION)	CONDUIT QTY. & SIZE PER SCE PLANS, SEE SCE PLANS FOR DETAILS (SERVICE REQUEST #4044496 PROJECT #3166536)
P-102	4	3	4#350kcmil, 1#4/0 GND	GENERATOR	MAIN SWITCHBOARD 'MS' (ATS)	
P-103	1	1-1/2	4#1, 1#6 GND	MAIN SWITCHBOARD 'MS' (DISTRIBUTION SECTION)	PANEL 'A'	
P-104	1	1-1/2	4#1, 1#6 GND	MAIN SWITCHBOARD 'MS' (DISTRIBUTION SECTION)	PANEL 'B'	
P-105	1	1-1/2	4#1, 1#6 GND	MAIN SWITCHBOARD 'MS' (DISTRIBUTION SECTION)	PANEL 'C'	
P-106	1	1-1/2	4#1, 1#6 GND	MAIN SWITCHBOARD 'MS' (DISTRIBUTION SECTION)	PANEL 'D'	
P-107	1	2	4#1/0, 1#4 GND	MAIN SWITCHBOARD 'MS' (DISTRIBUTION SECTION)	PANEL 'E'	
P-108	2	2	4#3/0, 1#2 GND	MAIN SWITCHBOARD 'MS' (DISTRIBUTION SECTION)	PANEL 'F'	
P-109	1	1-1/2	4#2, 1#8 GND	MAIN SWITCHBOARD 'MS' (DISTRIBUTION SECTION)	PANEL 'G'	
P-110	1	2	3/8" NYLON PULL CORD	MAIN SWITCHBOARD 'MS' (DISTRIBUTION SECTION)	(F) BATTERY CABINET	STUB-UP, CAP, AND TAG CONDUIT, AS SHOWN ON PLANS
P-111	1	2	2#300kcmil, 1#4 GND	MAIN SWITCHBOARD 'MS' (DISTRIBUTION SECTION)	TRANSFORMER 'TX-TF'	
P-112	1	2	3#3/0, 1#4 GND	TRANSFORMER 'TX-TF'	PANEL 'TF'	
P-113	1	2	3#4, 1#6 GND	MAIN SWITCHBOARD 'MS' (DISTRIBUTION SECTION)	120 GAL WATER HEATER (APPARATUS BAY)	ROUTE CONDUIT/WIRE THROUGH DISCONNECT SWITCH, AS SHOWN ON PLANS; SEE MECH. PLANS FOR EQUIPMENT DETAILS
L-100	1	1	3#10, 1#10 GND	PANEL 'F'	GENERATOR	GENERATOR AUXILIARY POWER
L-101	1	1	2#10, 1#10 GND	PANEL 'G'	LIGHT POLES	SEE CITY PLANS FOR LIGHT POLE INFORMATION
L-102	1	1	2#10, 1#10 GND	PANEL 'G'	ACCESS GATE MOTOR/CONTROLLER	
L-103	1	1	4#10, 1#10 GND	PANEL 'G'	PRESSURE WASHER RECEPT. & OUTDOOR TRUCK WASH	
L-104	1	1	3/8" NYLON PULL CORD	PANEL 'G'	(F) LEVEL 2, DUAL-PORT, POWER SHARE EV CHARGER	TERMINATE CONDUIT AT PULL BOX FOR (F) EV CHARGER, AS SHOWN ON PLANS
L-105	1	1	3/8" NYLON PULL CORD	PANEL 'G'	(F) LEVEL 2, DUAL-PORT, POWER SHARE EV CHARGER	TERMINATE CONDUIT AT PULL BOX FOR (F) EV CHARGER, AS SHOWN ON PLANS
L-106	1	1	2#12, 1#12 GND	PANEL 'F'	CIRCULATION FAN 'CF-1'	ROUTE CONDUIT/WIRE THROUGH SINGLE POLE SWITCH, AS SHOWN ON PLANS; SEE MECH. PLANS FOR EQUIPMENT DETAILS
L-107	1	1	3#10, 1#10 GND	PANEL 'F'	VEHICLE EXHAUST FAN CONTROL PANEL 'VEXC-1'	SEE MECHANICAL PLANS FOR VEHICLE EXHAUST SYSTEM DETAILS; COORDINATE WITH VEX CONTRACTOR
L-108	1	1	3#10, 1#10 GND	VEHICLE EXHAUST FAN CONTROL PANEL 'VEXC-1'	VEHICLE EXHAUST FAN 'VEXF-1'	ROUTE CONDUIT/WIRE THROUGH DISCONNECT SWITCH, AS SHOWN ON PLANS; COORDINATE WITH VEX CONTRACTOR
L-109	1	1	3#8, 1#10 GND	PANEL 'F'	ELECTRIC UNIT HEATER 'EUH-1'	ROUTE CONDUIT/WIRE THROUGH DISCONNECT SWITCH, AS SHOWN ON PLANS; SEE MECH. PLANS FOR EQUIPMENT DETAILS
L-110	1	1	3#8, 1#10 GND	PANEL 'F'	ELECTRIC UNIT HEATER 'EUH-2'	ROUTE CONDUIT/WIRE THROUGH DISCONNECT SWITCH, AS SHOWN ON PLANS; SEE MECH. PLANS FOR EQUIPMENT DETAILS
L-111	1	1-1/2	3/8" NYLON PULL CORD	PANEL 'F'	(F) SCBA FILL STATION	STUB, CAP AND TAG CONDUIT, AS SHOWN ON PLANS; COORDINATE EXACT STUB-OUT LOCATION W/ THE CITY
L-112	1	1	2#12, 1#12 GND	PANEL 'F'	SPLIT SYSTEM HEAT PUMP 'DS-1' (ODU)	ROUTE CONDUIT/WIRE THROUGH DISCONNECT SWITCH, AS SHOWN ON PLANS; SEE MECH. PLANS FOR EQUIPMENT DETAILS
L-113	1	1	2#12, 1#12 GND	SPLIT SYSTEM HEAT PUMP 'DS-1' (ODU)	SPLIT SYSTEM HEAT PUMP 'DS-1' (IDU)	SEE MECH. PLANS FOR EQUIPMENT DETAILS
L-114	1	1	2#12, 1#12 GND	PANEL 'F'	LOUVER 'L-2' ACTUATOR	ROUTE CONDUIT/WIRE THROUGH SINGLE POLE SWITCH, AS SHOWN ON PLANS; SEE MECH. PLANS FOR EQUIPMENT DETAILS
L-115	1	1	2#12, 1#12 GND	PANEL 'F'	'VEXR-1' RECEPTACLE	SEE MECH. PLANS FOR EQUIPMENT AND RECEPTACLE INSTALLATION DETAILS
L-116	1	1	2#12, 1#12 GND	PANEL 'F'	'VEXR-2' RECEPTACLE	SEE MECH. PLANS FOR EQUIPMENT AND RECEPTACLE INSTALLATION DETAILS
L-117	1	1	2#12, 1#12 GND	PANEL 'F'	'VEXR-3' RECEPTACLE	SEE MECH. PLANS FOR EQUIPMENT AND RECEPTACLE INSTALLATION DETAILS
L-118	1	1	2#10, 1#10 GND	PANEL 'F'	EXHAUST FAN 'EF-1'	ROUTE CONDUIT/WIRE THROUGH SINGLE POLE SWITCH AND DISCONNECT SWITCH, AS SHOWN ON PLANS; SEE MECH. PLANS FOR EQUIPMENT DETAILS
L-119	1	1	2#6, 1#6 GND	PANEL 'F'	EXHAUST FAN 'EF-2'	ROUTE CONDUIT/WIRE THROUGH DISCONNECT SWITCH AND LOUVER DAMPER INTERLOCK, AS SHOWN ON PLANS; SEE MECH. PLANS FOR EQUIPMENT DETAILS
L-120	1	1	2#8, 1#10 GND	PANEL 'F'	AIR COMPRESSOR 'AC-1'	ROUTE CONDUIT/WIRE THROUGH DISCONNECT SWITCH, AS SHOWN ON PLANS; SEE MECH. PLANS FOR EQUIPMENT DETAILS
L-121	1	1-1/2	3/8" NYLON PULL CORD	PANEL 'F'	(F) DETOX SAUNA	STUB, CAP AND TAG CONDUIT, AS SHOWN ON PLANS; COORDINATE EXACT STUB-OUT LOCATION W/ THE CITY
L-122						
L-123	1	1	3#12, 1#12 GND	PANEL 'F'	APP. BAY ROLL-UP GARAGE DOOR OPERATOR #1	COORDINATE EXACT LOCATION WITH CLEARSPAN PRIOR TO CONDUIT AND WIRE INSTALLATION
L-124	1	1	3#12, 1#12 GND	PANEL 'F'	APP. BAY ROLL-UP GARAGE DOOR OPERATOR #2	COORDINATE EXACT LOCATION WITH CLEARSPAN PRIOR TO CONDUIT AND WIRE INSTALLATION
L-125	1	1	3#12, 1#12 GND	PANEL 'F'	APP. BAY ROLL-UP GARAGE DOOR OPERATOR #3	COORDINATE EXACT LOCATION WITH CLEARSPAN PRIOR TO CONDUIT AND WIRE INSTALLATION
L-126	1	1	3#12, 1#12 GND	PANEL 'F'	APP. BAY ROLL-UP GARAGE DOOR OPERATOR #4	COORDINATE EXACT LOCATION WITH CLEARSPAN PRIOR TO CONDUIT AND WIRE INSTALLATION
L-127	1	1	3#12, 1#12 GND	PANEL 'F'	APP. BAY ROLL-UP GARAGE DOOR OPERATOR #5	COORDINATE EXACT LOCATION WITH CLEARSPAN PRIOR TO CONDUIT AND WIRE INSTALLATION
L-128	1	1	3#12, 1#12 GND	PANEL 'F'	APP. BAY ROLL-UP GARAGE DOOR OPERATOR #6	COORDINATE EXACT LOCATION WITH CLEARSPAN PRIOR TO CONDUIT AND WIRE INSTALLATION
C-100	1	1	4#14	MAIN SWITCHBOARD 'MS' (ATS)	GENERATOR	GENERATOR START/STOP CONTROL FROM ATS
C-101	1	1	2#14	GENERATOR REMOTE E-STOP BUTTON	GENERATOR	GENERATOR REMOTE EMERGENCY STOP
C-102	1	1	2#14	GENERATOR	GENERATOR REMOTE ANNUNCIATOR PANEL	GENERATOR BATTERY VOLTAGE TO REMOTE ANNUNCIATOR PANEL
C-103	1	1	MANUFACTURER SPECIFIED CABLE	FIRE STATION ALERT SYSTEM (LIVING QUARTERS)	FRONT ACCESS GATE PUSH BUTTON/DOORBELL	CONTRACTOR SHALL COORDINATE WIRE/CABLE WITH FIRE SYSTEM INTEGRATOR/CONTRACTOR; FIELD VERIFY EXACT CONDUIT STUB-UP LOCATIONS
C-104	1	1	MANUFACTURER SPECIFIED CABLES	'EUH-1,2' THERMOSTAT	ELECTRIC UNIT HEATERS 'EUH-1' & 'EUH-2'	CONTRACTOR SHALL COORDINATE WIRE/CABLE WITH HVAC CONTRACTOR AND PER EQUIPMENT MANUFACTURER RECOMMENDATION
C-105	1	1	MANUFACTURER SPECIFIED CABLE	SPLIT SYSTEM HEAT PUMP 'DS-1' CONTROLLER	SPLIT SYSTEM HEAT PUMP 'DS-1' (IDU)	CONTRACTOR SHALL COORDINATE WIRE/CABLE WITH HVAC CONTRACTOR AND PER EQUIPMENT MANUFACTURER RECOMMENDATION
C-106	1	1	MANUFACTURER SPECIFIED CABLE	'VEXR-1' SAFETY SHUT OFF BUTTON	'VEXR-1' CRAB RETURN SYSTEM CONTROL BOX	CONTRACTOR SHALL COORDINATE WIRE/CABLE WITH VEX CONTRACTOR; SEE MECH. PLANS FOR EQUIPMENT AND INSTALLATION DETAILS
C-107	1	1	MANUFACTURER SPECIFIED CABLE	'VEXR-2' SAFETY SHUT OFF BUTTON	'VEXR-2' CRAB RETURN SYSTEM CONTROL BOX	CONTRACTOR SHALL COORDINATE WIRE/CABLE WITH VEX CONTRACTOR; SEE MECH. PLANS FOR EQUIPMENT AND INSTALLATION DETAILS
C-108	1	1	MANUFACTURER SPECIFIED CABLE	'VEXR-3' SAFETY SHUT OFF BUTTON	'VEXR-3' CRAB RETURN SYSTEM CONTROL BOX	CONTRACTOR SHALL COORDINATE WIRE/CABLE WITH VEX CONTRACTOR; SEE MECH. PLANS FOR EQUIPMENT AND INSTALLATION DETAILS
S-100	1	1	3/C#18 TSP (SEE COMMENTS)	GENERATOR	GENERATOR REMOTE ANNUNCIATOR PANEL	MANUFACTURER RECOMMENDED CABLE: OLFLEX TRAY II CY, 3/C#18 CABLE, PART NO. 2218030

REGISTERED PROFESSIONAL ENGINEER
DUNCAN BABU PEERAMOU
NO. 21736
ELECTRICAL
STATE OF CALIFORNIA
04/07/26

Cannon
60 S. California Street, Suite 401
Ventura, CA 93001
P 805.503.4590 F 805.544.3863

THESE DRAWINGS ARE INSTRUMENTS OF SERVICE AND ARE THE PROPERTY OF CANNON. ALL DESIGNS AND INFORMATION ON THESE DRAWINGS ARE FOR USE OF THE SPECIFIED PROJECT AND SHALL NOT BE USED OTHERWISE OR REPRODUCED WITHOUT THE EXPRESSED WRITTEN PERMISSION OF CANNON.

REV.	DESCRIPTION	CK'D	APP	DATE
2	ISSUED FOR BID	DP/DR	-	04/07/26
1	ISSUED FOR REVIEW	DP/DR	-	12/19/25
0	ISSUED FOR BID	AM/DR	-	06/11/25

PUBLIC WORKS DEPARTMENT ENGINEERING DIVISION
CITY OF SAN BUENAVENTURA

FIRE STATION NO. 7
CONDUIT & CABLE SCHEDULE

DRN. BY: AM | DES. BY: AM | CK'D. BY: AM/DR

PRINCIPAL ENGINEER — DATE: 5 May 2026

CITY ENGINEER — DATE: 5/7/2026

SPEC. NUMBER 2025-010 | PROJECT NUMBER FA11-1061

June 11, 2025 | SHEET 109 OF 151 | DWG. NO. 2025-D-010

F:\pro\2023\230644\4 Production and Drafting\Const Dwgs\IE\Electrical Drawings\IE230644SH0001.dwg 4-06-26 04:00:09 PM MichelleA

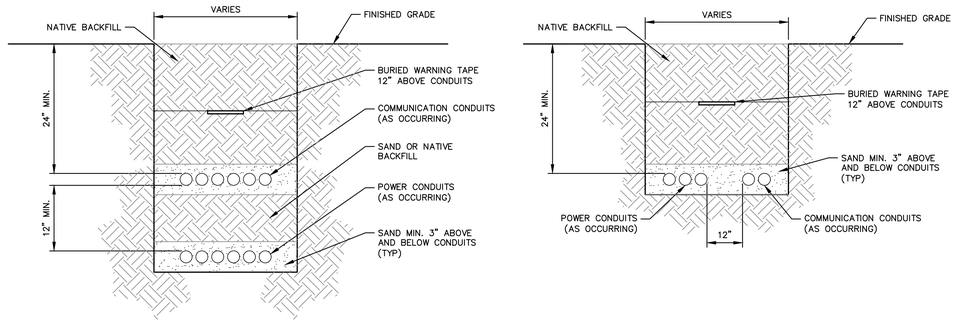

ELECTRICAL TRENCH DETAIL

SCALE: NO SCALE

1 / 101

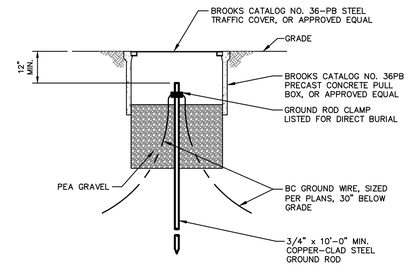

GROUND BOX DETAIL

SCALE: NO SCALE

2 / 101

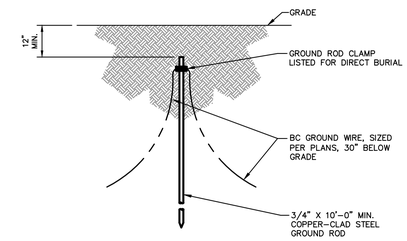

GROUND ROD DETAIL

SCALE: NO SCALE

3 / 101

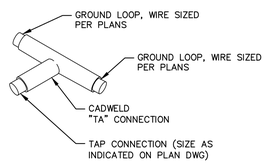

ITEM	DESCRIPTION	QTY
1A	#4/0 MAIN TO #4/0 TAP EXOTHERMIC WELD, WELD METAL & MOLD	AR
1B	#4/0 MAIN TO #2 TAP EXOTHERMIC WELD, WELD METAL & MOLD	AR
1C	#2 MAIN TO #2 TAP EXOTHERMIC WELD, WELD METAL & MOLD	AR

GROUND TAP UNDERGROUND DETAIL

SCALE: NO SCALE

4 / 101

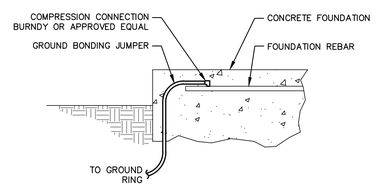

UFER GROUND DETAIL

SCALE: NO SCALE

5 / 101

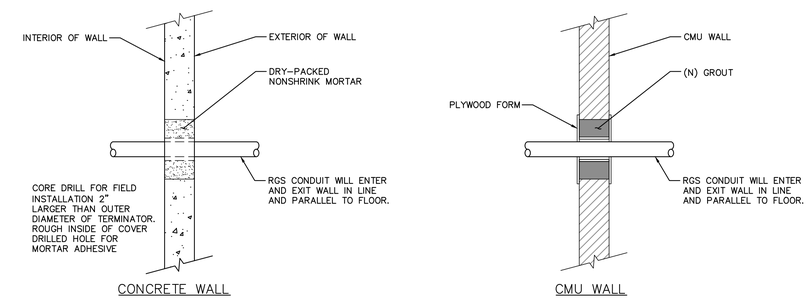

WALL PENETRATION DETAIL

SCALE: NO SCALE

7 / 101

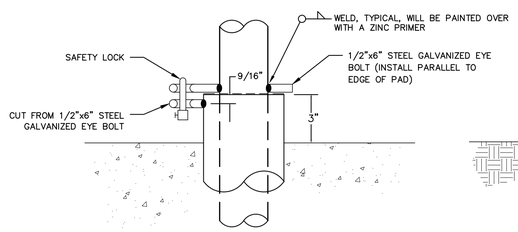

DETAIL "A"

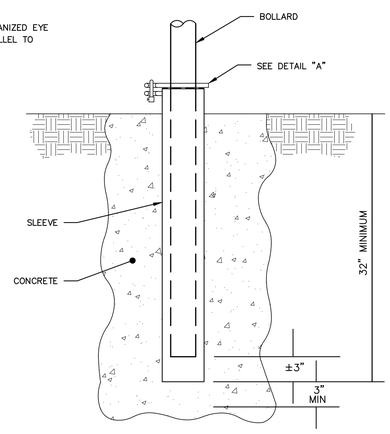

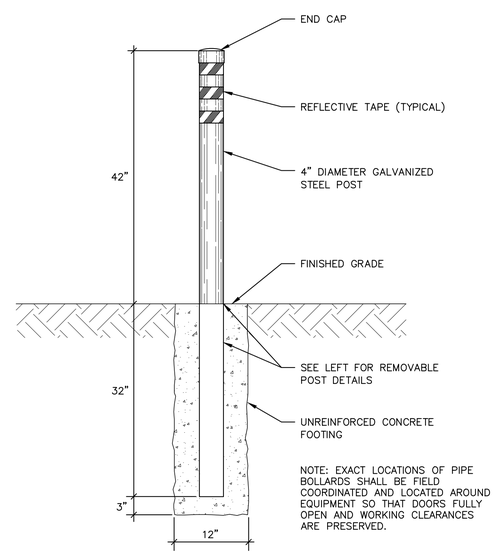

NOTE: EXACT LOCATIONS OF PIPE BOLLARDS SHALL BE FIELD COORDINATED AND LOCATED AROUND EQUIPMENT SO THAT DOORS FULLY OPEN AND WORKING CLEARANCES ARE PRESERVED.

REMOVABLE PIPE BOLLARD

SCALE: NO SCALE

6 / 101

REGISTERED PROFESSIONAL ENGINEER
OMKESH BABU PEERMAN
NO. 21736
ELECTRICAL
STATE OF CALIFORNIA

04/07/26

Cannon
60 S. California Street, Suite 401
Ventura, CA 93001
P 805.503.4590 F 805.544.3863

THESE DRAWINGS ARE INSTRUMENTS OF SERVICE AND ARE THE PROPERTY OF CANNON. ALL DESIGNS AND INFORMATION ON THESE DRAWINGS ARE FOR USE OF THE SPECIFIED PROJECT AND SHALL NOT BE USED OTHERWISE OR REPRODUCED WITHOUT THE EXPRESSED WRITTEN PERMISSION OF CANNON.

REV.	DESCRIPTION	CK'D	APP	DATE
2	ISSUED FOR BID	DP/DR	-	04/07/26
1	ISSUED FOR REVIEW	DP/DR	-	12/19/25
0	ISSUED FOR BID	AM/DR	-	06/11/25

PUBLIC WORKS DEPARTMENT ENGINEERING DIVISION

CITY OF SAN BUENAVENTURA

FIRE STATION NO. 7

ELECTRICAL DETAILS

DRN. BY: AM | DES. BY: AM | CK'D. BY: AM/DR

PRINCIPAL ENGINEER — DATE: 5 May 2026

CITY ENGINEER — DATE: 5/7/2026

SPEC. NUMBER 2025-010 | PROJECT NUMBER FA11-1061

June 11, 2025 | SHEET 110 OF 151 | DWG. NO. 2025-D-010

F:\proj\2023\230644\4 Production and Drafting\Const Dwgs\IE\Electrical Drawings\IE230644DS0001.dwg 4-06-26 04:03:07 PM MichelleA

GENERAL NOTES

1. Construction shall comply with the latest edition of the California Building Code (CBC), IBC Standards, IBC adopted Standards, and IBC recognized Standards and of any regulating agencies which have authority over any portion of the work, including local, state and federal safety and health standards, laws and regulations.
2. General notes and typical details apply to all structural features, unless otherwise indicated.
3. If certain features are not fully shown or called out on the drawings or in the specifications, their construction shall be of the same character as for similar conditions.
4. The construction documents represent the finished structure and do not indicate methods, procedures or sequence of construction. It is the responsibility of the Contractor to take necessary precautions to maintain and ensure the integrity of the structure during construction. The Contractor shall provide all measures necessary to protect life and property during construction.
5. The Contractor shall be responsible for coordinating the work of all trades and shall check all dimensions and holes and openings required in structural members. All discrepancies shall be called to the attention of the Structural Engineer and shall be resolved before proceeding with the work.
6. Prior to submitting shop drawings and product data, the Contractor shall verify that the submittals meet the requirements of the drawings and specifications. The contractor shall specifically note any exceptions to these requirements with the submittal.
7. Openings, pockets, etc. shall not be placed in structural members unless specifically detailed on the structural drawings. Notify the Structural Engineer when work requires openings, pockets, etc. in structural members not shown on the structural drawings.
8. Where the general notes and the typical details are in conflict with the specifications, the general notes and typical details shall govern. Notes and details within these drawings take precedence over General Notes.
9. Construction materials shall be spread out if placed on slabs, floors or roofs. Load shall not exceed the design live load per square foot. Provide adequate shoring where overload is anticipated.
10. Unless specifically shown or noted on the structural drawings, anchor bolts or insets for equipment anchorage or installation shall be designed by a Civil or Structural Engineer registered in the state of California, and shall be shown on the architectural, mechanical and/or electrical drawings. Connections of items supported by the structure are the responsibility of the disciplines who are making these attachments. These attachments shall be designed to resist gravity, wind, seismic, thermal loads, etc.

EXISTING UNDERGROUND UTILITIES

1. It is the responsibility of the Contractor to locate existing utilities whether shown hereon or not, and to protect them from damage. The location of any existing underground utilities shown on the drawings, if any, is approximate.
2. The Contractor shall be responsible for any damage which may result from his failure to locate and preserve all existing underground utilities.

DIMENSIONS

1. Do not scale drawings. Drawing scales given are approximate. Dimensions and elevations must be verified with Architectural Drawings. Discrepancies shall be conveyed to the Architect and the Structural Engineer and be resolved prior to proceeding.
2. See Architectural Drawings for dimensions, slopes, depressions and other information not specifically shown on the structural drawings.
3. The Contractor shall review and verify all dimensions prior to starting construction. The Architect/Engineer shall be notified immediately of any discrepancies or inconsistencies.

PROJECT DESIGN CRITERIA

1. Code: 2022 California Building Code
2. Risk Category: IV
3. Snow Loads

   Ground Snow Load, p_g = 0 psf
4. Wind Design Data

   Design Method: Envelope Method
   Exposure Category: C
   Basic Wind Speed (3–sec. gust), V_{ult}: 105 mph
5. Earthquake Design Data:

   Seismic Importance Factor, I_e: 1.50
   Mapped Spectral Response
   S_S: 1.96 g
   S_1: 0.74 g
   Site Class: E
   Spectral Response Coefficients
   S_{DS}: 1.19 g
   S_{D1}: 1.90 g
   Seismic Design Category: D

1

EXISTING CONDITIONS

1. Work shown is new unless noted as existing: (E).
2. Existing construction shown on these drawings was obtained from site investigation and can be used for bidding purposes. The contractor shall verify all existing job conditions, review all drawings and verify dimensions prior to construction. The contractor shall notify the Engineer of all discrepancies and exceptions before proceeding with the work.
3. The removal, cutting, drilling, etc. of existing work shall be performed with care in order not to jeopardize the structural integrity of the structure. If structural members or mechanical, electrical or architectural features not indicated for removal interfere with the new work, notify the Engineer immediately and obtain approval before removal of members.
4. The Contractor shall safely shore existing construction wherever existing supports are removed for the new work.
5. The Contractor shall perform the work with minimal inconvenience to the owner and without interruption of day–to–day work operations. The Contractor shall ensure safe travel of persons around areas of construction and shall coordinate all operations with the Owner or the Owner's agent.
6. The Contractor shall promptly repair any damage caused during operations, using materials and workmanship similar to that which was damaged.
7. All removed items, materials and debris, unless otherwise noted, shall be removed promptly from the site and disposed of in a legal manner.
8. Do not core or cut new openings in existing concrete or masonry without specific approval of the Structural Engineer. Submit dimensioned layout of all proposed new openings to the Structural Engineer for review and approval prior to coring or cutting openings. The Contractor, at their own expense, shall use non–destructive methods to locate existing reinforcing. Existing reinforcing shall not be cut without specific approval of the Structural Engineer.

GEOTECHNICAL DATA

1. No geotechnical report is provided for the project. Design of foundation is based on minimum requirements per Section 1806 of the CBC.
2. Foundation Type: Conventional spread foundations and drilled piers (friction).

   Design Values:

ISOLATED FOOTINGS	ALLOWABLE BEARING PRESSURES
DL + LL	1500 psf
DL + LL + Wind or Seismic	2000 psf
LATERAL RESISTANCE	
Passive Pressure	150 pcf
Coefficient of Friction	0.25
3. All footings shall bear on compacted undisturbed soil. Depth of footings shown on the drawings are minimum, and the bottom of footing shall be lowered as required to remove soft or loose materials.

FOUNDATIONS

1. See GEOTECHNICAL DATA notes for additional information.
2. When shown, the elevations of foundations indicate the estimated minimum foundation depths. Elevations shown are for bidding purposes only and are assumed to be in suitable bearing material.
3. The Contractor shall be solely responsible for all excavation procedures, including lagging, shoring and protection of adjacent property, structures, streets and utilities in accordance with the local jurisdiction.
4. Dewater excavations as required to maintain dry working conditions.
5. Excavations shall be properly backfilled. Do not place backfill behind retaining walls before concrete and/or masonry has attained specified 28–day compressive strength. Contractor shall brace or protect building and pit walls below grades from lateral loads until supporting floors and or roofs are in place and have attained full strength.
6. Footing backfill and utility trench backfill within building area shall be mechanically compacted in layers, to the approval of the Geotechnical Engineer. Flooding will not be permitted.
7. All abandoned footings, utilities, etc., that interfere with new construction, shall be removed.
8. The bottom of footings shall be level. Changes in footing elevations shall be made utilizing the TYPICAL STEP IN FOOTING detail, when included within these drawings.
9. Avoid footing penetrations and trenching near footings. Where unavoidable, see TYPICAL PIPE AND TRENCH detail, when included within these drawings.
10. Embedded items must be tied in place prior to foundation inspection.

CONCRETE

1. All portions of work pertaining to concrete construction shall conform to the California Building Code, Chapter 19, ACI Standard 318, and other referenced documents.
2. All concrete shall be ready–mix in accordance with ASTM C94.
3. Cement: ASTM C150 Type II. Where concrete is placed against soils that contain high levels of sulfides, use Type V cement.
4. Aggregate: ASTM C33. Aggregate for normal weight concrete shall conform to ASTM C–33.
5. Aggregate for lightweight concrete shall conform to ASTM C–330. The coarse aggregate size shall not exceed ¾" and the absolute volume of coarse aggregate shall not exceed 9.0 cubic feet per cubic yard of concrete.
6. Non–shrink Grout: ASTM C1107, premixed, non–staining, non–shrink grout.
7. Admixtures shall be approved by Structural Engineer prior to use. Calcium chloride or admixtures containing chloride(s) shall not be used.
8. Provide aggregates that do not contain any substance which may be deleteriously reactive with the alkalies in the cement. Fine and coarse aggregates shall be tested in accordance with ASTM C1260. Should the test data indicate potentially reactive aggregate, reject the aggregate(s) or perform additional testing using ASTM C1567.
9. Concrete mixes shall be designed by a qualified testing laboratory. Mix designs shall conform to ACI 318, Chapter 5, Sec. 1903, & 1904. Mixes are to be reviewed by owner's testing lab and submitted to the Architect/Engineer for approval. Do not cast concrete without approval by Architect/Engineer.

Concrete	Strength	Max Agg. Size	Max W/C Ratio
Foundations	4000 psi	1"	0.48

   All concrete shall be hard rock aggregate, regular–weight concrete, 145 pcf, unless noted otherwise.
10. Maximum slump shall not exceed 3" +/– 1" for footings, slabs on grade, and 4" +/– 1" for other concrete. Slump limitations noted shall apply to concrete mix prior to the addition of any water–reducing admixtures or super–plasticizers.
11. Placement of concrete shall conform to ACI 304. Clean and roughen (by sandblasting, bushammer, or other approved method) to ¼" amplitude for all concrete surfaces against which concrete is to be placed.
12. Concrete shall be placed in accordance with ASTM C94 and ACI Standard 304.
13. When cold weather conditions exist, place concrete in compliance with ACI 305. When hot weather conditions exist, place concrete in compliance with ACI 306. In hot conditions, reinforcing shall be kept cool during concrete placement.
14. Location of construction joints not specified in these drawings must be reviewed by the Structural Engineer. Concrete slab on grade shall have control joints as shown on the foundation plan. Where construction/crack control joints are not specified, provide at a roughly square pattern with segments not exceeding 150 square feet in area.
15. Forms for concrete shall be laid out and constructed to provide for any required cambers.
16. Dry pack or place non–shrink grout under base plates, sill plates, etc., as required for full bearing.
17. All reinforcing bars, anchor bolts and other concrete inserts shall be secured in position prior to placing concrete. Stabbing of anchor bolts or reinforcing into wet concrete is not allowed.
18. Provide sleeves for plumbing, mechanical, and electrical openings in concrete before placing. Do not cut any reinforcing which may conflict. Coring in concrete is not permitted except as shown. Notify the Structural Engineer, in advance, of conditions not shown on the structural drawings.
19. Conduits or pipes shall not be embedded within a slab, wall, beam, concrete fill over metal deck, or column, unless noted otherwise.
20. See architectural drawings for all molds, grooves, reveals, ornaments and grounds to be cast in concrete.
21. Concrete elements shall reach specified 28–day compressive strength before being loaded, UNO.

REINFORCING STEEL

1. All portions of work pertaining to concrete reinforcing construction shall conform to the California Building Code, Chapter 19, ACI Standard 318, and other referenced documents.
2. Reinforcing Steel: ASTM A615 grade 60. ASTM A706 where welded or otherwise indicated.
3. All reinforcement shall be continuous. Stagger splices where possible. Laps shall be per typical details, unless noted otherwise.
4. All reinforcing bar bends shall be made cold. Reinforcing bars shall not be re–bent without approval of Structural Engineer.
5. Dowels between footings and walls or columns shall be the same grade, size, spacing and number as the vertical reinforcement, respectively, unless noted otherwise.
6. Welding of reinforcement shall be with low hydrogen electrodes and shall conform to structural welding code – reinforcing steel, AWS D1.4, by the American Welding Society and ACI 318 Sec. 3.5.2. Welding rods used for the welding of reinforcing shall be E80XX. All welding shall be performed by certified welders.
7. Reinforcing steel shall be clean, free of excessive rust, grease, oil or other material likely to impair bond.
8. Minimum clear concrete cover for reinforcement, unless noted otherwise:

   A. Mild Reinforced Concrete:

Cast against earth:	3 inches
Cast in forms and exposed to earth or weather:	
#6 bar and larger:	2 inches
#5 bar and smaller:	1½ inches
Not exposed to earth or weather:	
Slabs and walls (#11 and smaller):	¾ inch
Beams, girders, and columns (to ties):	1½ inches

   Clearances are to closest reinforcement.

POST–INSTALLED ANCHORS

1. Post–Installed anchors include all adhesive anchors (reinforcing bar dowels and threaded rods) expansion anchors, screw anchors and undercut anchors set in holes drilled in existing concrete or masonry.
2. Installation of post–installed anchors shall conform to all requirements of the applicable code evaluation or IAPMO reports and manufacturers' recommendations.
3. Mark the location of all existing reinforcing in the substrate material within 12" of the proposed locations of all post–installed anchors. Notify the Engineer of any conflicts discovered between the proposed anchor locations and the existing reinforcing prior to fabrication of any steel and prior to any hole drilling, so as to avoid disturbing, cutting, or otherwise harming the existing reinforcing.
4. Holes for adhesive anchors in concrete shall be drilled. Cored holes are not permitted.
5. Do not install adhesive anchors in concrete if concrete strength is less than 2500 psi, age is less than 21 days, or temperature is less than 50 degrees Fahrenheit.
6. Adhesive Anchors in Concrete or Approved Equal (reinforcing bar dowels or threaded rods), UNO:

   A. HILTI "HIT–HY 200" ICC ESR–3187.
   B. HILTI "HIT–RE 500 V3" ICC ESR–3814.
   C. Simpson "SET–XP" Epoxy Adhesive. ICC ESR–2508.
7. Adhesive Anchors in Masonry or Approved Equal (reinforcing bar dowels or threaded rods), UNO:

   A. HILTI "HIT–HY 70" ICC ESR–2682.
   B. Simpson "SET–XP" Epoxy Adhesive. IAPMO ER–265.
8. Expansion Anchors in Concrete or Approved Equal, UNO:

   A. HILTI "Kwik–Bolt TZ" ICC ESR–1917.
   B. Simpson "Strong Bolt 2" ICC ESR–3037.

ABBREVIATIONS

#	Number or Pound
&	And
∠ or L	Angle
@	At
ABV.	Above
AB	Anchor Bolt
ADDL.	Additional
AISC	American Institute of Steel Construction
ALT.	Alternate
APA	American Plywood Association
APPROX.	Approximate
ARCH.	Architectural, Architect
ASTM	American Standards of Testing and Materials
BLDG.	Building
BLK.	Block, Blocking
BLW.	Below
BM.	Beam
BN	Boundary Nailing
BO	Bottom of
BOT.	Bottom
BRG.	Bearing
BS	Both Sides
BTWN.	Between
CANT.	Cantilever
CBC	California Building Code
CHD.	Chord
CIP	Cast–in–place
CJ	Construction or Control Joint
CJP	Complete Joint Penetration
℄ or CL	Center Line
CLG.	Ceiling
CLR.	Clear
CMU	Concrete Masonry Unit
COL.	Column
CONC.	Concrete
CONN.	Connection
CONT.	Continuous
COORD.	Coordinate
CSK.	Countersink
CTR.	Center
D or d	Nail Penny Size
ø or DIA.	Diameter
DBA	Deformed Bar Anchor
DBL.	Double
DET.	Detail
DF	Douglas Fir
DIAG.	Diagonal
DIM.	Dimension
DKG.	Decking
DL	Dead Load
DO.	Ditto
DWG.	Drawing
(E)	Existing
EA.	Each
EF	Each Face
EJ	Expansion Joint
ELEV., EL.	Elevation
EMBED.	Embedment
EN	Edge Nail, End Nail
EO	Edge of
EOC	Edge of Concrete
EQ.	Equal
EQUIP.	Equipment
ES	Each Side
EW	Each Way
EXP.	Expansion
EXT.	Exterior
FDN.	Foundation
FF	Finish Floor
FG	Finish Grade
FIN.	Finish
FJ	Floor Joist
FLR.	Floor
FN	Field Nail
FOC	Face of Concrete
FOM	Face of Masonry
FOS	Face of Stud
FRMG.	Framing
FS	Far Side
FT.	Foot, Feet
FTG.	Footing
GA.	Gauge
GALV.	Galvanized
GL.	Grid Line
GLB	Glued–laminated Beam
GYP.	Gypsum Board
HD	Holdown
HDG	Hot Dipped Galvanized
HDR.	Header
HGR.	Hanger
HORIZ.	Horizontal
HSB	High Strength Bolt
HSS	Hollow Structural Section
HT.	Height
IBC	International Building Code
ICC	International Code Council
ID	Inside Diameter
INFO.	Information
INT.	Interior
JST.	Joist
JT.	Joint
KSI	Kips per Square Inch
LL	Live load
LLH	Long Leg Horizontal
LLV	Long Leg Vertical
LONG.	Longitudinal
LOC.	Location
LS	Lag Screw
LTWT	Light Weight
MAX.	Maximum
MB	Machine Bolt
MECH.	Mechanical
MFR.	Manufacturer
MIN.	Minimum
MISC.	Miscellaneous
(N)	New
NS	Near Side
NTS	Not to Scale
NWT	Normal Weight
OC	On Center
OD	Outside Diameter
OH	Opposite Hand
OPNG.	Opening
PAF	Powder–Actuated Fastener
PERP.	Perpendicular
ℙ OR PL.	Plate
PLF	Pounds per Linear Foot
PLY	Plywood
PJP	Partial Joint Penetration
PSF	Pounds per Square Foot
PSI	Pounds per Square Inch
PT	Pressure Treated
PW	Puddle Weld
QTY.	Quantity
RAD.	Radius
REINF.	Reinforcing
REQ.	Required
RET.	Retaining
SAD	See Architectural Drawings
SCHD.	Schedule
SHT.	Sheet
SHTG.	Sheathing
SIM.	Similar
SMD	See Mechanical Drawings
SMS	Sheet Metal Screw
SOG	Slab on Grade
SPEC.	Specification
SQ.	Square
SS	Stainless Steel
STD.	Standard
STGD.	Staggered
STIFF.	Stiffener
STL.	Steel
STRUCT.	Structural
STRGR.	Stringer
SW	Shear Wall
SYM.	Symmetrical
T&B	Top and Bottom
T&G	Tongue and Groove
TEMP.	Temporary
THRU.	Through
TN	Toe Nail
TO	Top of
TOB	Top of Beam
TOC	Top of Concrete
TOG	Top of Grating
TOS	Top of Steel
TOW	Top of Wall
TRANSV.	Transverse
TYP.	Typical
UNO	Unless Noted Otherwise
URM	Unreinforced Masonry
VERT.	Vertical
VIF	Verify in Field
WWF	Welded Wire Fabric
w/	With
w/o	Without
WP	Work Point
WSHR.	Washer

REGISTERED PROFESSIONAL ENGINEER
MARSHALL R. PITHL
No. S5101
STRUCTURAL
STATE OF CALIFORNIA
04/07/26

Cannon
60 S. California Street, Suite 401
Ventura, CA 93001
P 805.503.4590 F 805.544.3863

THESE DRAWINGS ARE INSTRUMENTS OF SERVICE AND ARE THE PROPERTY OF CANNON. ALL DESIGNS AND INFORMATION ON THESE DRAWINGS ARE FOR USE OF THE SPECIFIED PROJECT AND SHALL NOT BE USED OTHERWISE OR REPRODUCED WITHOUT THE EXPRESSED WRITTEN PERMISSION OF CANNON.

REV.	DESCRIPTION	CK'D	APP	DATE
2	ISSUED FOR BID	VA	MRP	04/07/26
1	ISSUED FOR REVIEW	VA	MRP	12/19/25
0	ISSUED FOR BID	VA	MRP	06/11/25

PUBLIC WORKS DEPARTMENT ENGINEERING DIVISION
CITY OF SAN BUENAVENTURA

FIRE STATION NO. 7
STRUCTURAL GENERAL NOTES

DRN. BY: VA | DES. BY: VA | CK'D. BY: MRP

PRINCIPAL ENGINEER — DATE: 5 May 2026
CITY ENGINEER — DATE: 5/7/2026

SPEC. NUMBER 2025-010 | PROJECT NUMBER 93710
December 19, 2025 | SHEET 111 OF 151 | DWG. NO. 2025-D-010

F:\proj\2023\23064A\4 Production and Drafting\Const Dwgs\Structural\S0.1.dwg 4-07-26 10:14:43 AM Rebecca

SUBMITTALS

1. Submittals shall be submitted to the Prime Consultant and Structural Engineer for review prior to fabrication of the items.

2. A schedule for submittal of shop drawings shall be prepared by the Contractor and reviewed by the Prime Consultant and Structural Engineer prior to the start of fabrication. The schedule shall proportion the quantity of shop drawings to be reviewed in each submittal to allow sufficient time, as deemed reasonable in the professional judgement of the Prime Consultant and Structural Engineer, to permit adequate review. Allow a minimum of (10) working days for review by the Structural Engineer.

3. Shop drawings shall indicate the date or revision of drawing(s) from which the drawings were prepared. Submittals that do not identify the latest date or revision of drawing(s) will be returned without review. Only shop drawings that are complete will be accepted for review.

4. If, after review, the shop drawings must be revised and resubmitted, the shop drawings shall identify each revision and/or addition by clouding or other means to assure proper review.

5. Submittals will not be accepted directly from subcontractors. Submittals will be accepted from the General Contractor only after being reviewed and signed by the General Contractor, indicating compliance with the requirements of the construction documents. Submittals not complying with the requirements noted above or in the specifications will be returned without review.

6. Submittals shall include those indicated on the following list as well as any other items indicated in the specifications. This list is provided for convenience only and may not incorporate all requirements indicated in the project specifications.

CONCRETE REINFORCEMENT

1. Shop drawings complying with the requirements of ACI SP–66. include bar schedules, shapes of bent bars, spacing of bars, and location of splices.

2. Manufacturer's Certificate: Certify that reinforcing steel and accessories supplied for this project meet or exceed specified requirements.

3. Reports: Certified copies of mill test reports for each heat of reinforcing provided to the project, documenting compliance with the applicable ASTM specification, including chemical analysis, tensile tests and bend tests.

CAST–IN–PLACE CONCRETE

1. Mix designs and test data for concrete mixes, at least 15 days prior to intended placement. Mix design submittals shall include, as a minimum, the following:

   A. List of materials proposed weights and volumes of each material per cubic yard.
   B. Specification of source for each material.
   C. Gradation listing of aggregates and certification that coarse and fine aggregates meet the requirements listed in the concrete materials article of the cast–place concrete section of the specifications.
   D. List of admixtures, with manufacturer's data sheets.
   E. Certification that all aggregates are compatible with the proposed cement.
   F. Laboratory test reports from trial batches of field experience, as applicable for the specific mix proposed for use.
   G. The mix design shall be signed by a Professional Engineer licensed in the state of California.

2. Product data, material safety data sheets (MSDS) and Code Evaluation Reports, as applicable, for proprietary materials and items, including curing compounds, epoxy resins, surface treatments and proprietary anchoring systems.

3. Drawings indicating proposed locations of construction joints and control joints.

4. Description of curing methods proposed and products to be employed.

POST–INSTALLED ANCHORS

1. Product data and Code Evaluation Reports for anchors proposed as alternatives to those specified.

2. Preparation instructions and recommendations.

3. Installation methods.

4. Storage and handling requirements and recommendations.

STRUCTURAL OBSERVATIONS

1. Structural observation is not required.

POST–INSTALLED ANCHORS PER ICC AND/OR OTHER APPROVED AGENCY EVALUATION REPORTS

1. Verify the following:

   A. The specific manufacturer and model of anchors have been approved for the application by the Architect/Engineer.

   B. The holes are drilled at the angle required and of the diameter and depth required.

   C. The holes are clean prior to installation of the anchors.

   D. The adhesive packaging indicates an expiration date and that the expiration date has not passed.

   E. The adhesive is mixed properly and that the initial portion of adhesive coming out of the nozzle is wasted, as required by the manufacturer.

   F. The anchors are installed according to the manufacturer's recommendations.

2. Perform tests of anchors according to ASTM E 488 and as follows:

   A. Test ten percent of each application of anchors to the tensile or torque proof load as indicated on the drawings.

   B. One application of anchors or dowels shall be defined as those anchors or dowels installed by a single crew in a single day.

   C. Test locations are random at the discretion of the testing lab, unless otherwise directed by the Architect/Engineer.

   D. Tension test loads shall be maintained for a minimum of two minutes.

3. Tension Test criteria: Anchor displacement at the end of the loading period shall be limited to one–fifth of the nominal anchor diameter. Displacement following release of load shall return to zero.

4. Torque Test criteria: Test torque must be reached within a half turn of the nut, except for ⅜" diameter anchors, for which test torque must be reached within a quarter turn of the nut.

5. If any anchor fails the test, test all anchors in the same application not previously tested until 10 consecutive anchors pass.

6. Adhesive dowels in horizontal or upwardly inclined orientations require continuous special inspection and shall be performed by personnel certified by an applicable certification program in accordance with ACI 318 section 17.8.

SCHEDULE OF SPECIAL INSPECTIONS AND TESTS 2024 IBC

1. Special inspections and testing shall be performed in accordance with the approved plans and specifications, statement of special inspections and building code sections 1704 and 1705.

2. The schedule of special inspections summarizes the special inspections and tests required. Special inspectors shall refer to the approved plans and specifications for detailed special inspection requirements. Any additional tests and inspections required by the approved plans and specifications shall also be performed.

3. Schedule of special inspections and tests applicable to this project.

   A. Special inspections per sections 1704 and 1705 (only indicated items are required)
   B. Special inspections for wind resistance/seismic resistance per section 1705.12/1705.13

Notation Used in Table:

Column headers:
C Indicates continuous inspection is required.
P Indicates periodic inspections are required. The notes below and/or contract documents should clarify
Box entries:
X Is placed in the appropriate column to denote either "C" continuous or "P" periodic inspections.
––– Denotes an activity that is a one–time activity.
Std. Indicates that the standard defines frequency.

Additional detail regarding inspections and tests are provided in the project specifications or notes on the drawings.

4. Contractor responsible for the construction of the seismic–force–resisting system shall submit a written statement of responsibility to the building official prior to the commencement of work on the system.

5. Reports will be submitted to the building official and the registered design professional in responsible charge in accordance with section 1704.2.4.

6. A final report of special inspections documenting required special inspections, testing and correction of any discrepancies noted in the inspection shall be submitted prior to issuance of a certificate of use and occupancy (section 1704.2.4). The final report will document.

   A. Required special inspections
   B. Correction of discrepancies noted in inspections.

7. The owner recognizes their obligation to ensure that the construction complies with the approved permit documents and to implement this program of special inspections in partial fulfillment of these obligations, the owner will retain and directly pay for the special inspections as required in section 1704.2.

8. This plan has been developed with the understanding that the building official will:

   A. Review and approve the qualifications of the special inspectors who will perform the inspections.
   B. Monitor special inspection activities on the job site to assure that the special inspectors are qualified and are performing their duties as called for in this statement of special in inspection.
   C. Review submitted inspection reports.
   D. Perform inspections as required by the local building code.

VERIFICATION AND INSPECTION			C	P	REQ'D (?)
1705.3 Concrete					
Table 1705.3 – Concrete Construction					
1.	Inspection of reinforcing steel, including prestressing tendons and placement			X	YES
2.	Reinforcing bar welding				
	a.	Verify weldability if not ASTM A706		X	
	b.	Single pass fillet welds max 5/16"		X	
	c.	Inspect other welds	X		
3.	Inspection of anchors cast in concrete			X	
4.	Inspection of anchors installed in hardened concrete.				
	a.	Adhesive anchors horizontally or upward inclined	X		YES
	b.	Mechanical anchors and other adhesive anchors		X	YES
5.	Verify use of required design mix			X	YES
6.	Prior to concrete placement fabricate specimens for strength tests, perform slump and air content tests and determine the temperature of the concrete		X		YES
7.	Inspect concrete and shotcrete placement for proper application techniques		X		YES
8.	Verify maintenance of specified curing temperature and techniques			X	
9.	Inspect prestressed concrete for:				
	a.	Application of prestressing forces, and	X		
	b.	Grouting of bonded prestressing tendons	X		
10.	Inspect erection of precast concrete members			X	
11.	Verify in–situ concrete strength, prior to stressing of tendons in posttensioned concrete and prior to removal of shores and forms from beams and structural slabs			X	
12.	Inspect formwork for shape, location, and dimensions of the concrete member being formed			X	YES
ACI 318–19 Section 26.12: Compressive tests of specimens taken during concrete placement				X	

REGISTERED PROFESSIONAL ENGINEER
MARSHALL R. PAHL
No. S5101
STRUCTURAL
STATE OF CALIFORNIA
04/07/26

Cannon
60 S. California Street, Suite 401
Ventura, CA 93001
P 805.503.4590 F 805.544.3863

THESE DRAWINGS ARE INSTRUMENTS OF SERVICE AND ARE THE PROPERTY OF CANNON. ALL DESIGNS AND INFORMATION ON THESE DRAWINGS ARE FOR USE OF THE SPECIFIED PROJECT AND SHALL NOT BE USED OTHERWISE OR REPRODUCED WITHOUT THE EXPRESSED WRITTEN PERMISSION OF CANNON.

REV.	DESCRIPTION	CK'D	APP	DATE
2	ISSUED FOR BID	VA	MRP	04/07/26
1	ISSUED FOR REVIEW	VA	MRP	12/19/25
0	ISSUED FOR BID	VA	MRP	06/11/25

PUBLIC WORKS DEPARTMENT ENGINEERING DIVISION
CITY OF SAN BUENAVENTURA
FIRE STATION NO. 7
STRUCTURAL GENERAL NOTES

DRN. BY: VA DES. BY: VA CK'D. BY: MRP

PRINCIPAL ENGINEER 5 May 2026 DATE
CITY ENGINEER 5/7/2026 DATE

SPEC. NUMBER 2025-010 PROJECT NUMBER 93710
December 19, 2025 SHEET 112 OF 151 DWG. NO. 2025-D-010

F:\proj\2023\230644\4 Production and Drafting\Const Dwgs\Structural\S0.1.dwg 4–07–26 10:14:44 AM RebeccaL

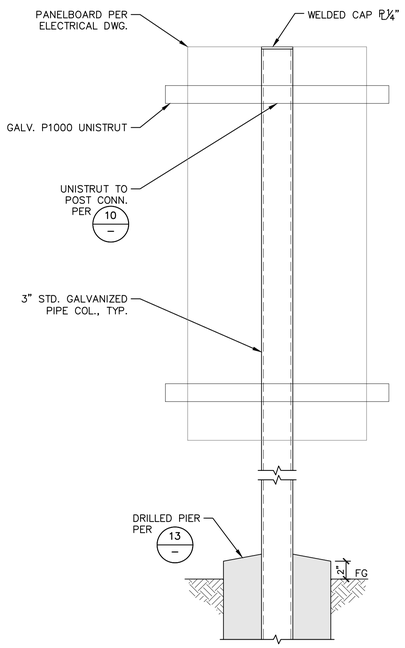

PANELBOARD DETAIL (5)

SCALE: 1–1/2" = 1'–0"

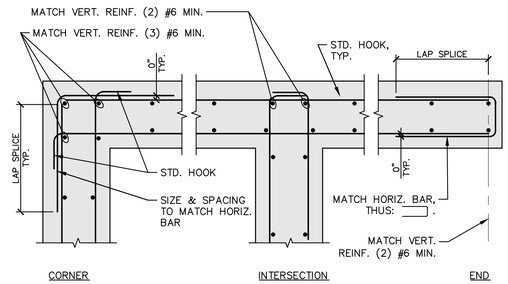

DOUBLE CURTAIN OF REINFORCING

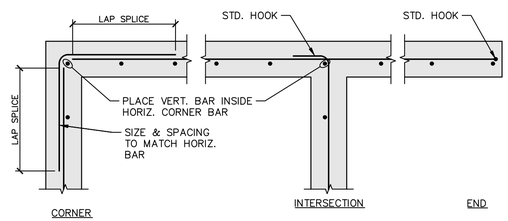

SINGLE CURTAIN OF REINFORCING

TYPICAL HORIZONTAL WALL & FOOTING REINFORCING DETAIL (6)

SCALE: 3/4" = 1'–0"

	BASIC DEVELOPMENT LENGTH (ld), INCHES			LAP SPLICE LENGTH, INCHES			DEVELOPMENT OF BAR W/ STD. HOOK (ldh), INCHES		
BAR SIZE	f'c=3000	f'c=4000	f'c=5000	f'c=3000	f'c=4000	f'c=5000	f'c=3000	f'c=4000	f'c=5000
#3	17	15	13	22	19	17	9	8	7
#4	22	19	17	29	25	22	11	10	9
#5	28	24	22	36	31	28	14	12	11
#6	33	29	26	43	37	34	17	15	13
#7	48	42	38	63	54	49	20	17	15
#8	55	48	43	72	62	56	22	19	17
#9	62	54	48	81	70	63	25	22	20
#10	70	61	54	91	79	70	28	25	22
#11	78	67	60	101	87	78	31	27	24

MODIFICATION FACTORS:

THE LENGTHS NOTED ABOVE SHALL BE MULTIPLIED BY THE FOLLOWING FACTORS, AS APPLICABLE:
- 1.3 FOR TOP BARS (MORE THAN 12" CONC. CAST BELOW)
- 1.3 FOR LIGHTWEIGHT CONCRETE
- 1.5 FOR BARS WITH LESS THAN 2 BAR DIAMETERS CLEAR SPACING OR FOR BARS WITH LESS THAN 1 BAR DIAMETER OF CONCRETE COVER
- 1.5 FOR EPOXY–COATED BARS, U.O.N.

THE MODIFICATION FACTORS NOTED ABOVE SHALL BE COMBINED WHEN MULTIPLE CONDITIONS OCCUR. FOR EXAMPLE, FOR TOP BARS IN LIGHTWEIGHT CONCRETE, THE SPLICE LENGTH NOTED ABOVE SHALL BE MULTIPLIED BY 1.3x1.3=1.69

NOTES:

1. VALUES APPLY TO GRADE 60 REINFORCEMENT
2. SPLICES OF HORIZONTAL REINFORCEMENT IN WALLS SHALL BE STAGGERED.
3. SPLICES IN WALLS CONTAINING TWO CURTAINS OF REINFORCEMENT SHALL NOT OCCUR IN THE SAME LOCATION.
4. LAP SPLICES IN CONCRETE MASONRY SHALL BE AS SPECIFIED IN "TYP. LAP SPLICE SCHEDULE – MASONRY".
5. USE MECHANICAL COUPLERS FOR #14 AND LARGER BARS.
6. TOP BAR FACTOR DOES NOT APPLY TO BARS IN WALLS.

TYPICAL DEVELOPMENT LENGTH & LAP SPLICE SCHEDULE – CONCRETE (4)

SCALE: 1'–0" = 1'–0"

BAR SIZE	"D" (IN.)
#3	1½
#4	2
#5	2½

NOTE:
ALL BENDS SHALL BE MADE COLD.

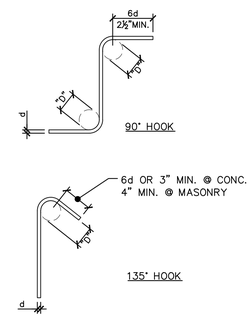

TYP. TIE AND STIRRUP HOOKS (7)

SCALE: 3/4" = 1'–0"

BAR SIZE	"D" (IN.)
#3	2¼
#4	3
#5	3¾
#6	4½
#7	5¼
#8	6
#9	9½
#10	10¾
#11	12

NOTE:
ALL BENDS SHALL BE MADE COLD.

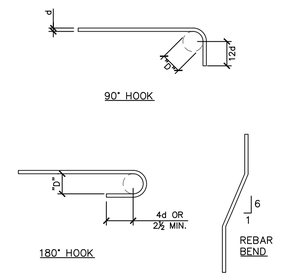

TYP. REINF. BENDS (8)

SCALE: 3/4" = 1'–0"

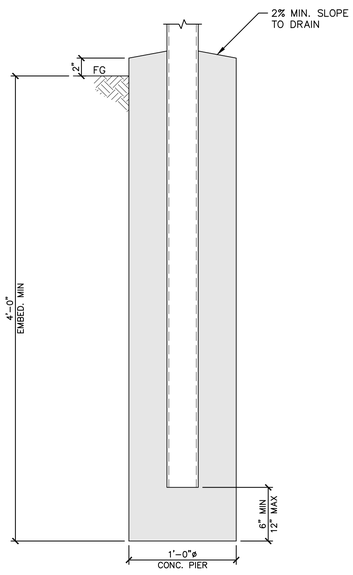

DRILLED PIER DETAIL (13)

SCALE: 1–1/2" = 1'–0"

NOTES:

- CHANNEL SUPPORTS AND CHANNEL HARDWARE SHALL BE UNISTRUT OR AN APPROVED EQUAL
  - a. CHANNEL MEMBER COATING SHALL BE PRE–GALVANIZED PER ASTM A653 CONFIRMING TO A G–90 COATING OR HOT–DIPPED GALVANIZED PER ASTM A123 OR A153.
  - b. ALL CHANNEL NUTS AND BOLTS SHALL BE HOT–DIPPED GALVANIZED PER ASTM A153.
  - c. ALL UNISTRUT GENERAL FITTINGS SHALL BE HOT–DIPPED GALVANIZED PER ASTM A123 OR A153

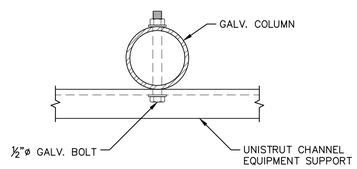

UNISTRUT TO POST DETAIL (10)

SCALE: 3" = 1'–0"

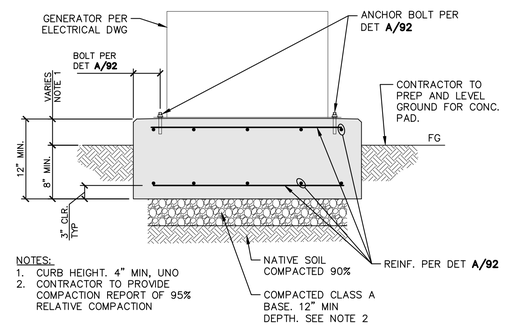

NOTES:
1. CURB HEIGHT. 4" MIN, UNO
2. CONTRACTOR TO PROVIDE COMPACTION REPORT OF 95% RELATIVE COMPACTION

CONCRETE BASE FOR GENERATOR (12)

SCALE: 3/4" = 1'–0"

REGISTERED PROFESSIONAL ENGINEER MARSHALL R. PITHL No. S5101 STRUCTURAL STATE OF CALIFORNIA
04/07/26

Cannon
60 S. California Street, Suite 401
Ventura, CA 93001
P 805.503.4590 F 805.544.3863

THESE DRAWINGS ARE INSTRUMENTS OF SERVICE AND ARE THE PROPERTY OF CANNON. ALL DESIGNS AND INFORMATION ON THESE DRAWINGS ARE FOR USE OF THE SPECIFIED PROJECT AND SHALL NOT BE USED OTHERWISE OR REPRODUCED WITHOUT THE EXPRESSED WRITTEN PERMISSION OF CANNON.

REV.	DESCRIPTION	CK'D	APP	DATE
2	ISSUED FOR BID	VA	MRP	04/07/26
1	ISSUED FOR REVIEW	VA	MRP	12/19/25
0	ISSUED FOR BID	VA	MRP	06/11/25

PUBLIC WORKS DEPARTMENT ENGINEERING DIVISION
CITY OF SAN BUENAVENTURA

FIRE STATION NO. 7
STRUCTURAL TYPICAL DETAILS

DRN. BY: VA | DES. BY: VA | CK'D. BY: MRP

PRINCIPAL ENGINEER — DATE: 5 May 2026

CITY ENGINEER — DATE: 5/7/2026

SPEC. NUMBER 2025-010 | PROJECT NUMBER 93710

December 19, 2025 | SHEET 113 OF 151 | DWG. NO. 2025-D-010

F:\proj\2023\230644\4 Production and Drafting\Const Dwgs\Structural\S1.0.dwg 4-07-26 10:14:45 AM RebeccaL

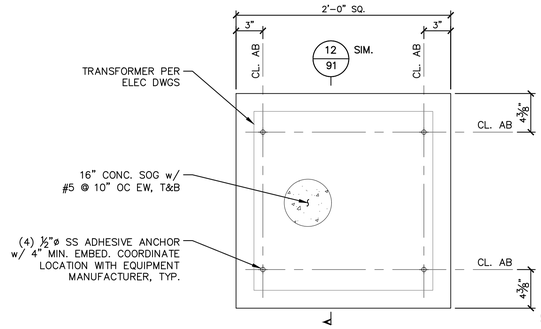

TRANSFORMER TX-TF FOUNDATION PLAN (D)

SCALE: 1-1/2" = 1'-0"

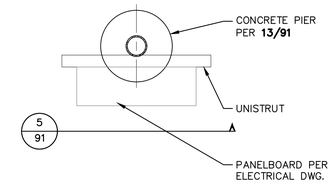

PANELBOARD TF FOUNDATION PLAN (C)

SCALE: 1" = 1'-0"

FOUNDATION PLAN NOTES

1. SEE SHEETS **89** THROUGH **90** FOR GENERAL NOTES AND **91** FOR TYPICAL DETAILS.
2. SLAB SHALL BE FLAT FOR EQUIPMENT FOOTPRINT AREA AND CAN SLOPE AWAY FROM EQUIPMENT FACE PER PLAN.
3. CONTRACTOR SHALL VERIFY ALL ANCHOR BOLT LOCATIONS AND DIMENSIONS OF GENERATOR PRIOR TO CONSTRUCTION. CONTRACTOR SHALL CONTACT STRUCTURAL ENGINEER REGARDING ANY DISCREPANCIES.
4. CONTRACTOR SHALL VERIFY ALL ANCHOR BOLT LOCATIONS AND DIMENSIONS OF SWITCHBOARD PRIOR TO CONSTRUCTION. CONTRACTOR SHALL CONTACT STRUCTURAL ENGINEER REGARDING ANY DISCREPANCIES.
5. CONTRACTOR SHALL VERIFY ALL ANCHOR BOLT LOCATIONS AND DIMENSIONS OF TRANSFORMER PRIOR TO CONSTRUCTION. CONTRACTOR SHALL CONTACT STRUCTURAL ENGINEER REGARDING ANY DISCREPANCIES.
6. REFER TO ELECTRICAL DWG. FOR SITE PLAN AND FOUNDATION LOCATIONS.

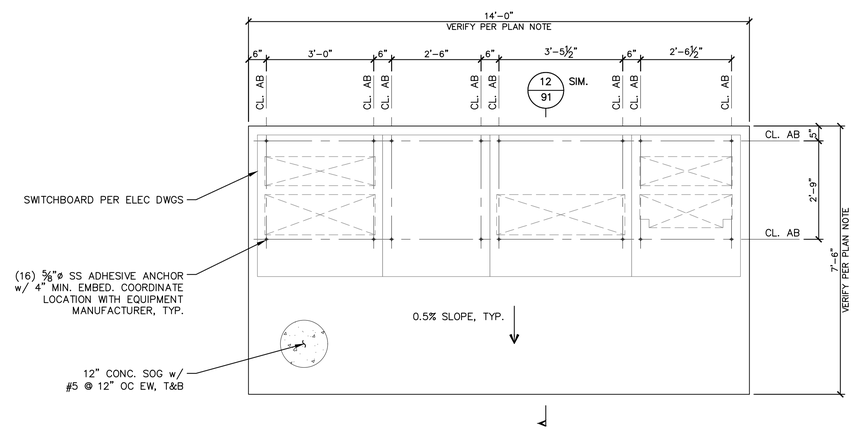

SWITCHBOARD FOUNDATION PLAN (B)

SCALE: 1/2" = 1'-0"

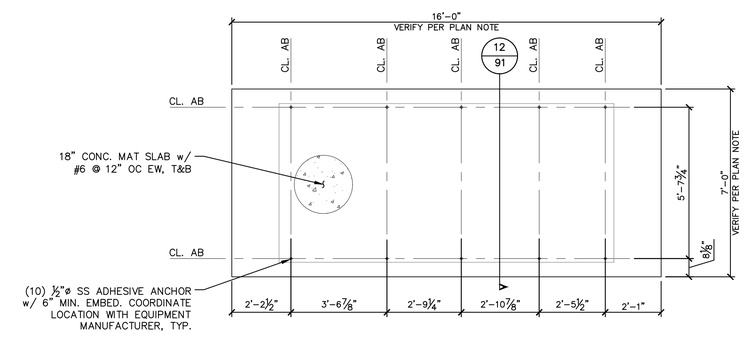

GENERATOR FOUNDATION PLAN (A)

SCALE: 3/8" = 1'-0"

REGISTERED PROFESSIONAL ENGINEER
MARSHALL R. PIHL
No. S5101
STRUCTURAL
STATE OF CALIFORNIA

04/07/26

Cannon
60 S. California Street, Suite 401
Ventura, CA 93001
P 805.503.4590 F 805.544.3863

THESE DRAWINGS ARE INSTRUMENTS OF SERVICE AND ARE THE PROPERTY OF CANNON. ALL DESIGNS AND INFORMATION ON THESE DRAWINGS ARE FOR USE OF THE SPECIFIED PROJECT AND SHALL NOT BE USED OTHERWISE OR REPRODUCED WITHOUT THE EXPRESSED WRITTEN PERMISSION OF CANNON.

REV.	DESCRIPTION	CK'D	APP	DATE
2	ISSUED FOR BID	VA	MRP	04/07/26
1	ISSUED FOR REVIEW	VA	MRP	12/19/25
0	ISSUED FOR BID	VA	MRP	06/11/25

PUBLIC WORKS DEPARTMENT ENGINEERING DIVISION
CITY OF SAN BUENAVENTURA

FIRE STATION NO. 7
STRUCTURAL FOUNDATION PLAN

DRN. BY: VA | DES. BY: VA | CK'D. BY: MRP

PRINCIPAL ENGINEER — DATE: 5 May 2026

CITY ENGINEER — DATE: 5/7/2026

SPEC. NUMBER 2025-010 | PROJECT NUMBER 93710

December 19, 2025 | SHEET 114 OF 151 | DWG. NO. 2025-D-010

F:\proj\2023\230644\4 Production and Drafting\Const Dwgs\Structural\S2.0.dwg 4-07-26 10:14:45 AM Rebecca

APPLICABLE CODES

2001 BUILDING STANDARDS ADMINISTRATIVE CODE, PART 1, TITLE 24 CCR
2001 CALIFORNIA BUILDING CODE, VOLUMES 1,2 AND 3 (PART 2, TITLE 24, CCR) (1997 EDITION UNIFORM BUILDING CODE WITH 2001 CALIFORNIA AMENDMENTS)
2001 CALIFORNIA ELECTRICAL CODE (PART 3, TITLE 24, CCR) (1999 NATIONAL ELECTRICAL CODE WITH 2001 CALIFORNIA AMENDMENTS)
2001 CALIFORNIA MECHANICAL CODE (PART 4, TITLE 24 CCR) (2000 EDITION IAPMO UNIFORM MECHANICAL CODE WITH 2001 CALIFORNIA AMENDMENTS)
2001 CALIFORNIA PLUMBING CODE (PART 5, TITLE 24 CCR) (2000 IAPMO UNIFORM PLUMBING CODE AND 2001 CALIFORNIA AMENDMENTS)
2001 CALIFORNIA ENERGY CODE (PART 6, TITLE 24, CCR)
2001 CALIFORNIA FIRE CODE (PART 9, TITLE 24 CCR)
2001 CALIFORNIA ELEVATOR SAFETY CONSTRUCTION CODE (PART 7, TITLE 24, CCR)
2001 CALIFORNIA REFERENCED STANDARDS CODE (PART 12, TITLE 24, CCR)

APPLICABLE STANDARDS

NFPA 13 – 1999 EDITION, THE INSTALLATION OF AUTOMATIC SPRINKLER SYSTEMS, AS AMENDED
NFPA 14 – 2000 EDITION, INSTALLATION OF STANDPIPE, PRIVATE HYDRANT AND HOSE SYSTEMS
NFPA 17A – WET CHEMICAL SYSTEMS – 1990 EDITION
NFPA 24 – 1995 EDITION, INSTALLATION OF PRIVATE FIRE SERVICE MAINS AND THEIR APPURTENANCES
NFPA 72 – 1999 EDITION, NATIONAL FIRE ALARM CODE, AS AMENDED
NFPA 253 – CRITICAL RADIANT FLUX OF FLOOR COVERING SYSTEMS – 1989 EDITION
NFPA 2001 – CLEAN AGENT FIRE EXTINGUISHING SYSTEMS – 1994 EDITION REFERENCE CODE SECTION FOR NFPA STANDARDS – CBC (SFM) 3504.1

CITY OF VENTURA FIRE STATION
2269 ALESSANDRO DR, VENTURA, CA 93001
MANUFACTURED MODULAR BUILDING
(1) 48'x60'

Serial No. 2AG11660

Serial No. 2AG11661

Serial No. 2AG11662

Serial No. 2AG11663

DRAWING INDEX

SHEET NO.	ARCHITECTURAL
A0.0	TITLE SHEET
A0.3	FINISH, DOOR & WINDOW SCHEDULES
A1.0	FLOOR PLAN
A2.0	FRAMING PLAN
A2.3	REFLECTED CEILING PLAN
A4.1	INTERIOR ELEVATIONS
A4.2	INTERIOR ELEVATIONS
A4.3	INTERIOR ELEVATIONS
A4.4	INTERIOR ELEVATIONS
A4.5	INTERIOR ELEVATIONS
A5.4	EXTERIOR ELEVATIONS
	MECHANICAL
M1.3	MECHANICAL PLAN WALL MOUNT 48'x60' PENDING
	ELECTRICAL
E0.0	ELECTRICAL DETAILS
E1.0	ELECTRICAL PLAN POWER
E2.0	ELECTRICAL PLAN LIGHTING
E3.0	ELECTRICAL PLAN LOW VOLTAGE
	PLUMBING
P0.1	GENERAL NOTES & LEGENDS – PLUMBING
P0.2	SCHEDULES – PLUMBING
P1.0	OVERALL FLOOR PLAN – PLUMBING
P3.0	ROOF PLAN – PLUMBING
P4.1	ENLARGED FLOOR PLAN – SANITARY WASTE & VENT
P4.2	ENLARGED FLOOR PLAN – DOMESTIC WATER
P5.1	ISOMETRIC – SANITARY WASTE & VENT
P5.2	ISOMETRIC – DOMESTIC WATER
P6.0	DETAILS – PLUMBING
	FIRE SPRINKLERS
FS–1	FIRE SPRINKLERS COVER SHEET
FS–2	MODULAR BLDG–FIRE SPRINKLER LAYOUT

GLOBAL MODULAR Incorporated

AURORA DESIGNS MODTECH Designs MODULAR STRUCTURES INTERNATIONAL, INC DESIGNS

CONTRACTORS LICENSE #837357

NORTHERN CALIFORNIA DIVISON
450 COMMERCE AVE
ATWATER, CA 95301
PHONE: (209) 676–8029
FAX: (209) 676–8067
WEBSITE: WWW.GDVI.NET

SOUTHERN CALIFORNIA DIVISON
1860 CHICAGO AVE., SUITE I–7
RIVERSIDE, CA 92507
PHONE: (951) 686–3633
FAX: (951) 686–3666
WEBSITE: WWW.GDVI.NET

THIS DRAWING AND THE MATERIAL CONTAINED THERE-IN ARE THE PROPERTY OF GLOBAL MODULAR, INC. AND SHALL NOT BE REPRODUCED, COPED OR OTHERWISE DISPOSED OF DIRECTLY OR INDIRECTLY AND SHALL NOT BE USED IN WHOLE OR IN PART TO ASSIST IN THE MAKING OF OR FOR THE PURPOSE OF FURNISHING ANY INFORMATION FOR THE MAKING OF DRAWINGS, PRINTS APPARATUS OR PARTS THEREOF WITHOUT THE FULL KNOWLEDGE AND WRITTEN CONSENT OF GLOBAL MODULAR, INC. ALL PATENTABLE MATERIAL CONTAINED HEREIN AND ORIGINATING WITH GLOBAL MODULAR, INC. SHALL BE THE PROPERTY OF GLOBAL MODULAR, INC.

PROJECT NAME:

48x60
VENTURA
FIRE DEPARTMENT
2269 ALESSANDRO DR, VENTURA, CA 93001

PUBLIC WORKS DEPARTMENT ENGINEERING DIVISION
CITY OF SAN BUENAVENTURA

PRINCIPAL ENGINEER — DATE: 5 May 2026

CITY ENGINEER — DATE: 5/7/2026

ARCHITECT OF RECORD

MFR. STRUCTURAL ENGINEER OF RECORD

MFR. PROJECT SPECIFIC PROFESSIONAL OF RECORD

SHEET TITLE:

TITLE SHEET

REVISIONS

1 -
2 -
3 -
4 -

PROJECT NO.:	00-0000
DRAWN BY:	00
SCALE:	AS NOTED
DATE:	00-00-00

SHEET NUMBER

A0.0

SPEC NO. 2025-010 DWG. NO. 2025-D-010

FOR REFERENCE ONLY

HARDWARE GROUP (ENTRY/OFFICE) 1

QTY.	ITEM	DESCRIPTION
1	LOCK SET	"FALCON": K511 DANE LEVER 626
1	KEYING	CONSTRUCTION KEY
3	HINGES	"MCKINNEY": T2714 4.5"x4.5" NRP A5133
1	CLOSER	"NORTON": 8301 SLIM COVER (5 LB OPERATING PUSH/PULL PRESSURE)
1	THRESHOLD	"PEMKO": 271A 36"
1	DOOR BOTTOM	"PEMKO": 216AV 36"
1	WEATHER-STRIP	"PEMKO": 2891AS 36"x84"
1	KICK PLATE	"ROCKWOOD": K1050 10"x34"
1	DOOR STOP	"ROCKWOOD": 443 FLOOR STOP (LOCATED 4" FROM WALL)

HARDWARE GROUP (PANIC) 2

QTY.	ITEM	DESCRIPTION
1	LOCK SET	"VON DUPRIN": PUSH BAR AX-22-L-SP28 RIM EXIT DEVICE
1	EXTERIOR TRIM	"VON DUPRIN": LEVER HANDLE 230L TRIM
1	KEYING	CONSTRUCTION KEY
3	HINGES	"MCKINNEY": T2714 4.5"x4.5" NRP A5133
1	CLOSER	"NORTON": 8301 SLIM COVER (5 LB OPERATING PUSH/PULL PRESSURE)
1	THRESHOLD	"PEMKO": 271A 36"
1	DOOR BOTTOM	"PEMKO": 216AV 36"
1	WEATHER-STRIP	"PEMKO": 2891AS 36"x84"
1	KICK PLATE	"ROCKWOOD": K1050 10"x34"
1	DOOR STOP	"ROCKWOOD": 443 FLOOR STOP (LOCATED 4" FROM WALL)

HARDWARE GROUP (PANIC) 2A

QTY.	ITEM	DESCRIPTION
1	LOCK SET	"VON DUPRIN": PUSH BAR AX-22-L-SP28 RIM EXIT DEVICE
1	EXTERIOR TRIM	"VON DUPRIN": LEVER HANDLE 230L TRIM
1	KEYING	CONSTRUCTION KEY
3	HINGES	"MCKINNEY": T2714 4.5"x4.5" NRP A5133
1	CLOSER	"NORTON": 8301 SLIM COVER (5 LB OPERATING PUSH/PULL PRESSURE)
1	THRESHOLD	"PEMKO": 271A 36"
1	DOOR BOTTOM	"PEMKO": 216AV 36"
1	FIRE SMOKE GASKETING	"PEMKO": S88
1	KICK PLATE	"ROCKWOOD": K1050 10"x34"
1	DOOR STOP	"ROCKWOOD": 443 FLOOR STOP (LOCATED 4" FROM WALL)

HARDWARE GROUP (PRIVACY) 3

QTY.	ITEM	DESCRIPTION
1	LOCK SET	"FALCON": 301 DANE LEVER 626
3	HINGES	"MCKINNEY": T2714 4"x4" A5133

HARDWARE GROUP (OFFICE) 4

QTY.	ITEM	DESCRIPTION
1	LOCK SET	"FALCON": 521 DANE LEVER 626
1	KEYING	CONSTRUCTION KEY
3	HINGES	"MCKINNEY": T2714 4"x4" A5133

HARDWARE GROUP (PASSAGE) 5

QTY.	ITEM	DESCRIPTION
1	LOCK SET	"FALCON": 101 DANE LEVER 626
3	HINGES	"MCKINNEY": T2714 4"x4" A5133

HARDWARE GROUP (STORAGE) 6

QTY.	ITEM	DESCRIPTION
1	LOCK SET	"FALCON": 581 DANE LEVER 626
1	KEYING	CONSTRUCTION KEY
3	HINGES	"MCKINNEY": T2714 4"x4" A5133

DOOR SCHEDULE

#	#-Room Name	DOOR TYPE	DOOR WIDTH	DOOR HEIGHT	HARDWARE GROUP	DOOR MATERIAL	DOOR GAUGE	DOOR FRAME	FRAME GAUGE	GLAZING	FIRE RATING	REMARKS
101	EXT-VESTIBULE 1	B	3'-0"	7'-0"	2	STL	18	KD	16	–	–	–
102	EXT-VESTIBULE 2	B	3'-0"	7'-0"	2A	STL	18	KD	16	–	45 MIN	RATED W/ SMOKE GASKETING
103	EXT-VESTIBULE 3	B	3'-0"	7'-0"	2A	STL	18	KD	16	–	45 MIN	RATED W/ SMOKE GASKETING
104	EXT-VESTIBULE 1	B	3'-0"	7'-0"	2	SCL	–	TM	16	–	–	–
105	CREW OFFICE	A	3'-0"	7'-0"	4	SCL	–	TM	16	–	–	–
106	OPEN AREA	A	3'-0"	7'-0"	5	SCL	–	TM	16	–	–	–
107	INT-VESTIBULE 2	B	3'-0"	7'-0"	2	SCL	–	TM	16	–	–	–
108	INT-VESTIBULE 3	B	3'-0"	7'-0"	2	SCL	–	TM	16	–	–	–
109	BUNK 1	A	3'-0"	7'-0"	4	SCL	–	TM	16	–	–	
110	BUNK 2	A	3'-0"	7'-0"	4	SCL	–	TM	16	–	–	–
111	BUNK 3	A	3'-0"	7'-0"	4	SCL	–	TM	16	–	–	–
112	BUNK 4	A	3'-0"	7'-0"	4	SCL	–	TM	16	–	–	–
113	BUNK 5	A	3'-0"	7'-0"	4	SCL	–	TM	16	–	–	–
114	UTILITY	A	3'-0"	7'-0"	4	SCL	–	TM	16	–	–	–
115	BUNK 6	A	3'-0"	7'-0"	4	SCL	–	TM	16	–	–	–
116	BUNK 7	A	3'-0"	7'-0"	4	SCL	–	TM	16	–	–	–
117	BUNK 8	A	3'-0"	7'-0"	4	SCL	–	TM	16	–	–	–
118	SHOWER 4	A	3'-0"	7'-0"	3	SCL	–	TM	16	–	–	–
119	CAPT/CHIEF OFFICE	A	3'-0"	7'-0"	4	SCL	–	TM	16	–	–	–
120	SHOWER 1	A	3'-0"	7'-0"	3	SCL	–	TM	16	–	–	–
121	SHOWER 2	A	3'-0"	7'-0"	3	SCL	–	TM	16	–	–	–
122	SHOWER 3	A	3'-0"	7'-0"	3	SCL	–	TM	16	–	–	–
123	UTILITY	C	3'-0"	7'-0"	6	SCL	–	TM	16	–	–	LOUVERS

DOOR MATERIAL LEGEND
STL: STEEL DOOR-HOLLOW CORE
SCL: SOLID CORE WOOD LEGACY

DOOR FRAME LEGEND
KD: KNOCK DOWN-HOLLOW METAL
TM: TIMELY METAL

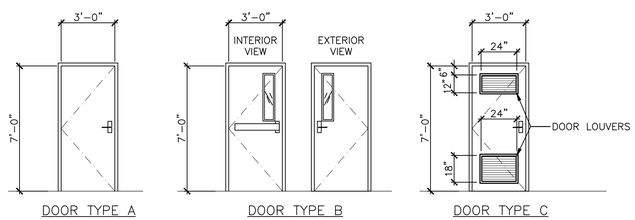

DOOR TYPE

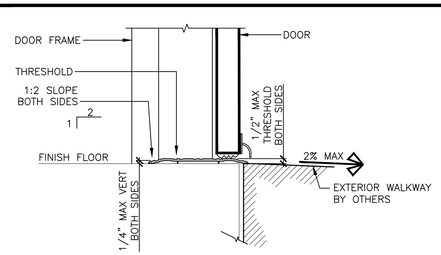

ACCESSIBLE THRESHOLD
SCALE: NTS

ROOM FINISH SCHEDULE

ROOM NAME	FLOOR FINISH	BASE	WALLS ELEV. 1	WALLS ELEV. 2	WALLS ELEV. 3	WALLS ELEV. 4	CEILING FINISH	HEIGHT CEILING	REMARKS
BUNK 1	CPT	4TB	VCG	VCG	VCG	VCG	AT	8'-6"	–
BUNK 2	CPT	4TB	VCG	VCG	VCG	VCG	AT	8'-6"	–
BUNK 3	CPT	4TB	VCG	VCG	VCG	VCG	AT	8'-6"	–
BUNK 4	CPT	4TB	VCG	VCG	VCG	VCG	AT	8'-6"	–
BUNK 5	CPT	4TB	VCG	VCG	VCG	VCG	AT	8'-6"	–
BUNK 6	CPT	4TB	VCG	VCG	VCG	VCG	AT	8'-6"	–
BUNK 7	CPT	4TB	VCG	VCG	VCG	VCG	AT	8'-6"	–
BUNK 8	CPT	4TB	VCG	VCG	VCG	VCG	AT	8'-6"	–
VESTIBULE 1	CPT	4TB	VCG	VCG	VCG	VCG	AT	8'-6"	–
VESTIBULE 2	CPT	4TB	VCG	VCG	VCG	VCG	AT	8'-6"	–
VESTIBULE 3	CPT	4TB	VCG	VCG	VCG	VCG	AT	8'-6"	–
CAPTAIN / CHIEF OFFICE	CPT	4TB	VCG	VCG	VCG	VCG	AT	8'-6"	–
SHOWER 1	SV	6SC	FRP	FRP	FRP	FRP	AT	8'-0"	–
SHOWER 2	SV	6SC	FRP	FRP	FRP	FRP	AT	8'-0"	–
SHOWER 3	SV	6SC	FRP	FRP	FRP	FRP	AT	8'-0"	–
SHOWER 4	SV	6SC	FRP	FRP	FRP	FRP	AT	8'-0"	–
CORRIDOR	CPT	4TB	VCG	VCG	VCG	VCG	AT	8'-6"	–
CREW OFFICE	CPT	4TB	VCG	VCG	VCG	VCG	AT	8'-6"	–
DAYROOM	CPT	4TB	VCG	VCG	VCG	VCG	AT	8'-6"	–
OPEN AREA	CPT	4TB	VCG	VCG	VCG	VCG	AT	8'-6"	–
KITCHEN	VCT	4TB	VCG	VCG	VCG	VCG	AT	8'-6"	–
UTILITY	SV	6SC	FRP	FRP	FRP	FRP	AT	8'-0"	–

FLOOR FINISH LEGEND
CPT: CARPET FLOORING
SV: SHEET VINYL FLOORING
VCT: VINYL COMPOSITION TILE
4TB: 4" TOP SET BASE
6SC: 6" SELF COVE BASE

WALL FINISH LEGEND:
VCG: 1/2" VINYL COVERED GYP BOARD.
NOTE: USE TYPE 'X' GYP BOARD WHERE CALL FOR.
USE MOISTURE RESISTANT GYP BOARD BEHIND SINKS

FRP: FRP: 1/8" FIBERBOARD REINFORCED PANELS OVER:
1/2" MOISTURE RESISTANT GYP BOARD

CEILING FINISH LEGEND: (CHECK BOX WHERE APPLICABLE)
AT: ACOUSTICAL TILE IN HEAVY DUTY T-BAR GRID
ULTIMA BEVELED TEGULAR 24"x24" TILE.

HL: 5/8" GYP BOARD TAPE/TEXTURED/PAINTED

WINDOW FRAME LEGEND
AL: ALUMINUM
HM: HOLLOW METAL

WINDOW FRAME FINISHES
CA: CLEAR ANODIZED
BA: BRONZE ANODIZED
PNT: PAINTED

GLAZING TYPES
1: TEMPERED GRAYLITE
2: CLEAR TEMPERED
3: DUAL PANE
4: FIRE SAFETY GLASS

GLAZING NOTE
1. GLAZING U-FACTOR
OPERABLE=0.60
FIXED=0.52
2. SHGC RANGE: 0.25
3. VT

WINDOW SCHEDULE

WINDOW TYPE	WINDOW WIDTH	WINDOW HEIGHT	WINDOW FRAME	FRAME FINISH	WINDOW GLAZING	REMARKS
A	4'-0"	4'-0"	AL	CA	3	SCREENED
B	2'-0"	3'-0"	AL	CA	3	

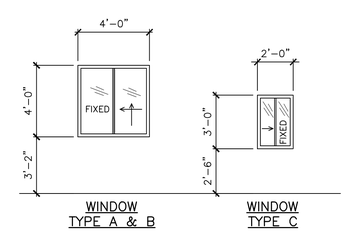

WINDOW NOTE
BASEMENTS, HABITABLE ATTICS

GLOBAL MODULAR Incorporated
AURORA DESIGNS MODTECH Designs MODULAR STRUCTURES INTERNATIONAL INC. DESIGNS
CONTRACTORS LICENSE #837357

NORTHERN CALIFORNIA DIVISON
450 COMMERCE AVE
ATWATER, CA 95301
PHONE: (209) 676-8029
FAX: (209) 676-8067
WEBSITE: WWW.GDVI.NET

SOUTHERN CALIFORNIA DIVISON
1860 CHICAGO AVE., SUITE I-7
RIVERSIDE, CA 92507
PHONE: (951) 686-3633
FAX: (951) 686-3666
WEBSITE: WWW.GDVI.NET

THIS DRAWING AND THE MATERIAL CONTAINED THERE-IN ARE THE PROPERTY OF GLOBAL MODULAR, INC. AND SHALL NOT BE REPRODUCED, COPED OR OTHERWISE DISPOSED OF DIRECTLY OR INDIRECTLY AND SHALL NOT BE USED IN WHOLE OR IN PART TO ASSIST IN THE MAKING OF OR FOR THE PURPOSE OF FURNISHING ANY INFORMATION FOR THE MAKING OF DRAWINGS, PRINTS APPARATUS OR PARTS THEREOF WITHOUT THE FULL KNOWLEDGE AND WRITTEN CONSENT OF GLOBAL MODULAR, INC. ALL PATENTABLE MATERIAL CONTAINED HEREIN AND ORIGINATING WITH GLOBAL MODULAR, INC, SHALL BE THE PROPERTY OF GLOBAL MODULAR, INC.

PROJECT NAME:

48x60
VENTURA
FIRE DEPARTMENT
2269 ALESSANDRO DR, VENTURA, CA 93001

PUBLIC WORKS DEPARTMENT ENGINEERING DIVISION
CITY OF SAN BUENAVENTURA

PRINCIPAL ENGINEER — DATE: 5 May 2026
CITY ENGINEER — DATE: 5/7/2026

ARCHITECT OF RECORD

MFR. STRUCTURAL ENGINEER OF RECORD

MFR. PROJECT SPECIFIC PROFESSIONAL OF RECORD

SHEET TITLE:
FINISH, DOOR & WINDOW SCHEDULES

REVISIONS
1 -
2 -
3 -
4 -

PROJECT NO.:	00-0000
DRAWN BY:	00
SCALE:	AS NOTED
DATE:	00-00-00

SHEET NUMBER
A0.3

SPEC NO. 2025-010 DWG. NO. 2025-D-010

FOR REFERENCE ONLY

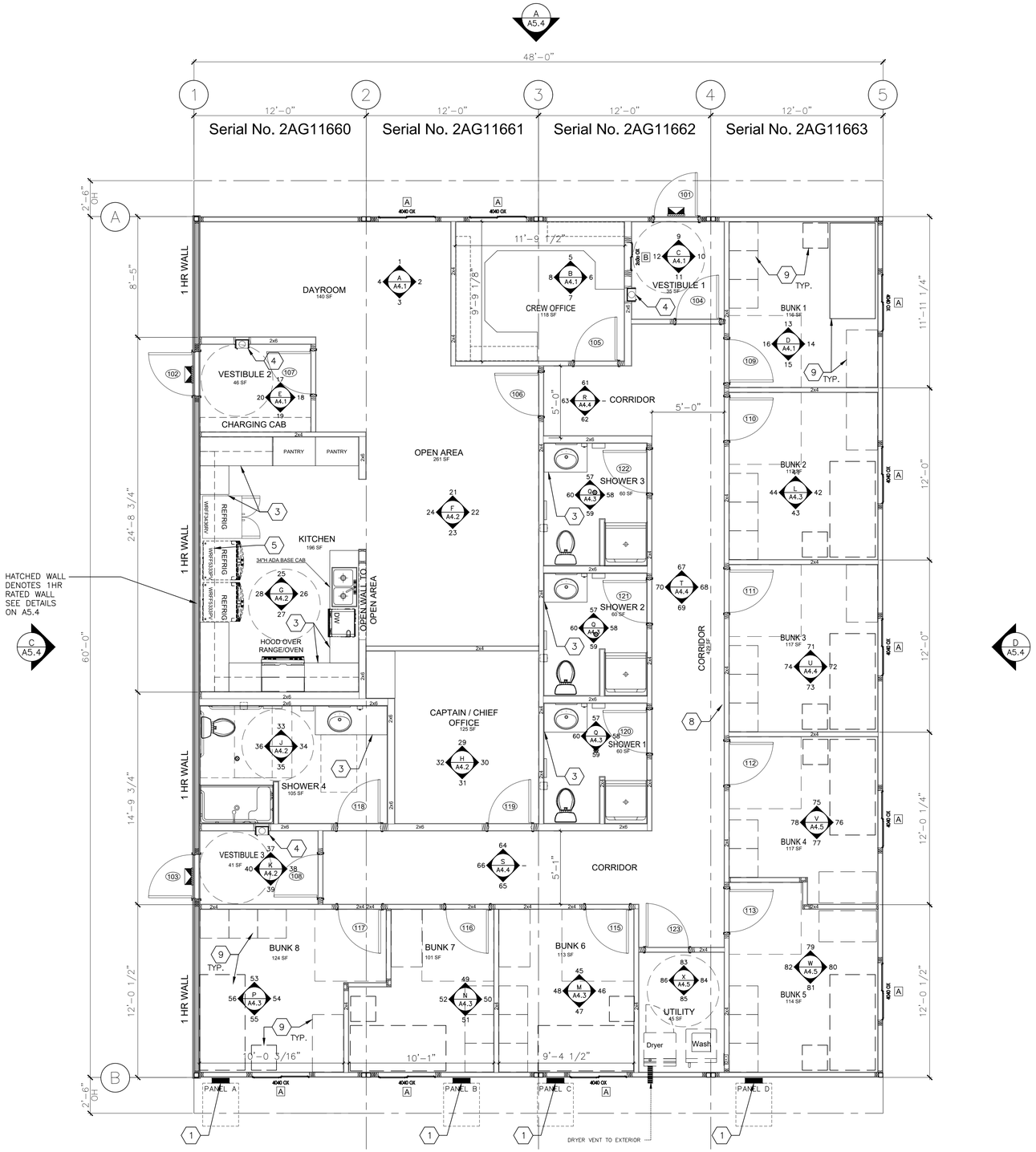

FLOOR PLAN

SCALE: 1/4"=1'-0"

KEY NOTES

1. ELECTRICAL PANEL (SEE ELECTRICAL SHEETS)
2. AC UNIT (SEE MECHANICAL SHEETS)
3. BASE CABINET(S)
4. FIRE EXTINGUISHER–5 LB DRY CHEMICAL W/ 2A–10B–C UL RATING +48" AFF TO TOP OF HANDLE IN SEMI–RECESSED CABINET WITH 4" MAX PROJECTION, TYP.
5. UPPER CABINET(S)
6. ROOM SIGNAGE (SEE SIGNAGE SPECIFICATIONS A0.4 SHEET)
7. EXIT SIGNAGE (SEE SIGNAGE SPECIFICATIONS A0.4 SHEET)
8. INTERIOR WALL
9. FURNITURE BY OTHERS
10. OCCUPANT LOAD SIGN (SEE SIGNAGE SPECIFICATIONS A0.4 SHEET)

GLOBAL MODULAR incorporated

AURORA DESIGNS · MODTECH Design · MODULAR STRUCTURES INTERNATIONAL, INC. DESIGN

CONTRACTORS LICENSE #837357

NORTHERN CALIFORNIA DIVISON
450 COMMERCE AVE
ATWATER, CA 95301
PHONE: (209) 676–8029
FAX: (209) 676–8067
WEBSITE: WWW.GDVI.NET

SOUTHERN CALIFORNIA DIVISON
1860 CHICAGO AVE., SUITE I–7
RIVERSIDE, CA 92507
PHONE: (951) 686–3633
FAX: (951) 686–3666
WEBSITE: WWW.GDVI.NET

THIS DRAWING AND THE MATERIAL CONTAINED THERE-IN ARE THE PROPERTY OF GLOBAL MODULAR, INC. AND SHALL NOT BE REPRODUCED, COPIED OR OTHERWISE DISPOSED OF DIRECTLY OR INDIRECTLY AND SHALL NOT BE USED IN WHOLE OR IN PART TO ASSIST IN THE MAKING OF OR FOR THE PURPOSE OF FURNISHING ANY INFORMATION FOR THE MAKING OF DRAWINGS, PRINTS APPARATUS OR PARTS THEREOF WITHOUT THE FULL KNOWLEDGE AND WRITTEN CONSENT OF GLOBAL MODULAR, INC. ALL PATENTABLE MATERIAL CONTAINED HEREIN AND ORIGINATING WITH GLOBAL MODULAR, INC, SHALL BE THE PROPERTY OF GLOBAL MODULAR, INC.

PROJECT NAME:

48x60
VENTURA
FIRE DEPARTMENT
2269 ALESSANDRO DR, VENTURA, CA 93001

PUBLIC WORKS DEPARTMENT ENGINEERING DIVISION
CITY OF SAN BUENAVENTURA

PRINCIPAL ENGINEER — DATE: 5 May 2026

CITY ENGINEER — DATE: 5/7/2026

ARCHITECT OF RECORD

MFR. STRUCTURAL ENGINEER OF RECORD

MFR. PROJECT SPECIFIC PROFESSIONAL OF RECORD

SHEET TITLE:

FLOOR PLAN

REVISIONS

1 -
2 -
3 -
4 -

PROJECT NO.:	00-0000
DRAWN BY:	00
SCALE:	AS NOTED
DATE:	00-00-00

SHEET NUMBER

A1.0

SPEC NO. 2025-010 DWG. NO. 2025-D-010

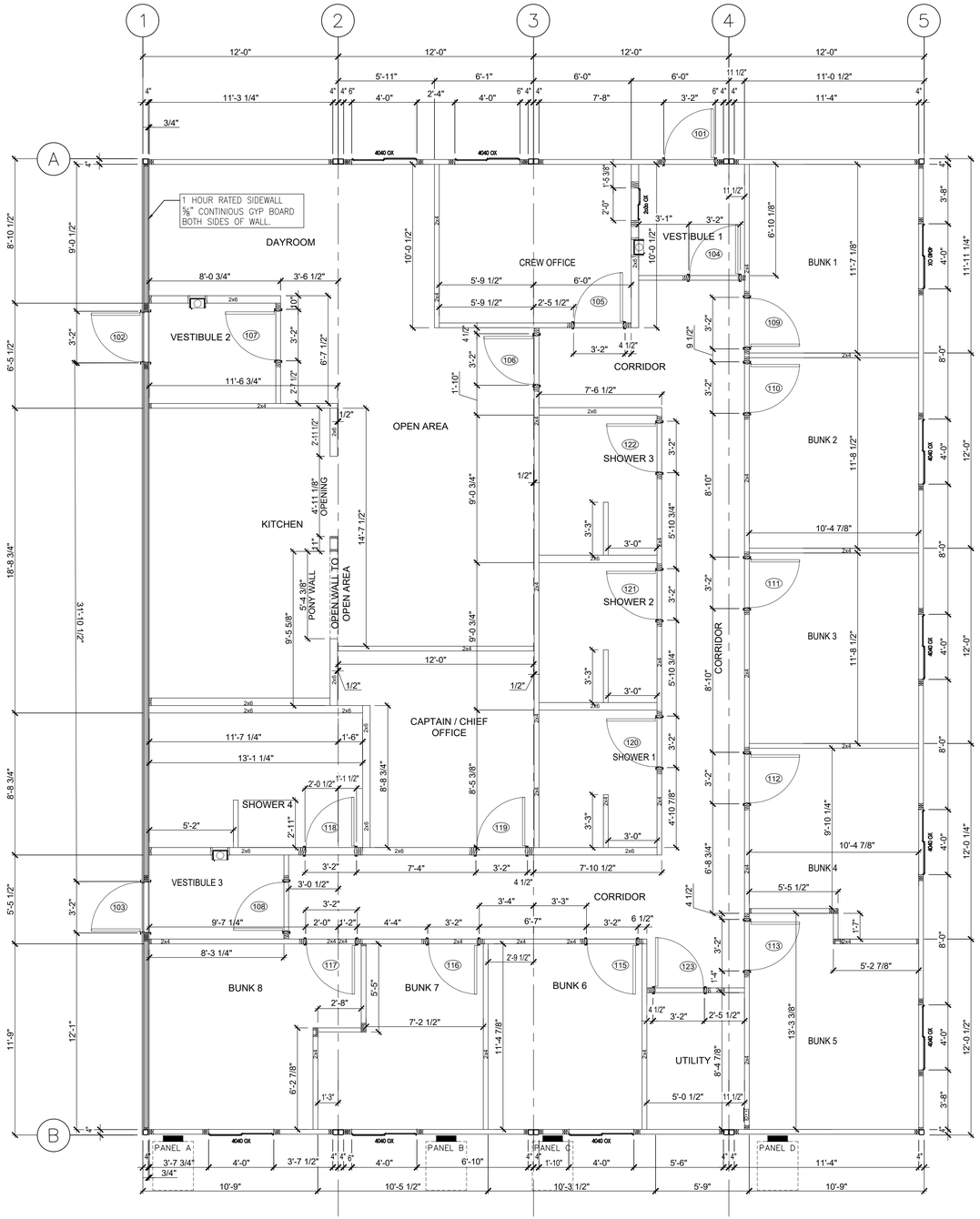

A WALL FRAMING PLAN
SCALE: 1/4"=1'-0"

GLOBAL MODULAR Incorporated

AURORA DESIGNS · MODTECH Designs · MODULAR STRUCTURES INTERNATIONAL, INC. DESIGNS

CONTRACTORS LICENSE #837357

NORTHERN CALIFORNIA DIVISON
450 COMMERCE AVE
ATWATER, CA 95301
PHONE: (209) 676-8029
FAX: (209) 676-8067
WEBSITE: WWW.GDVI.NET

SOUTHERN CALIFORNIA DIVISON
1860 CHICAGO AVE., SUITE I-7
RIVERSIDE, CA 92507
PHONE: (951) 686-3633
FAX: (951) 686-3666
WEBSITE: WWW.GDVI.NET

THIS DRAWING AND THE MATERIAL CONTAINED THERE-IN ARE THE PROPERTY OF GLOBAL MODULAR, INC. AND SHALL NOT BE REPRODUCED, COPED OR OTHERWISE DISPOSED OF DIRECTLY OR INDIRECTLY AND SHALL NOT BE USED IN WHOLE OR IN PART TO ASSIST IN THE MAKING OF OR FOR THE PURPOSE OF FURNISHING ANY INFORMATION FOR THE MAKING OF DRAWINGS, PRINTS APPARATUS OR PARTS THEREOF WITHOUT THE FULL KNOWLEDGE AND WRITTEN CONSENT OF GLOBAL MODULAR, INC. ALL PATENTABLE MATERIAL CONTAINED HEREIN AND ORIGINATING WITH GLOBAL MODULAR, INC, SHALL BE THE PROPERTY OF GLOBAL MODULAR, INC.

PROJECT NAME:

48x60
VENTURA
FIRE DEPARTMENT
2269 ALESSANDRO DR, VENTURA, CA 93001

PUBLIC WORKS DEPARTMENT ENGINEERING DIVISION
CITY OF SAN BUENAVENTURA

PRINCIPAL ENGINEER — DATE: 5 May 2026
CITY ENGINEER — DATE: 5/7/2026

ARCHITECT OF RECORD

MFR. STRUCTURAL ENGINEER OF RECORD

MFR. PROJECT SPECIFIC PROFESSIONAL OF RECORD

SHEET TITLE:
WALL FRAMING PLAN

REVISIONS
1 -
2 -
3 -
4 -

PROJECT NO.:	00-0000
DRAWN BY:	00
SCALE:	AS NOTED
DATE:	00-00-00

SHEET NUMBER
A2.0

SPEC NO. 2025-010 DWG. NO. 2025-D-010

FOR REFERENCE ONLY

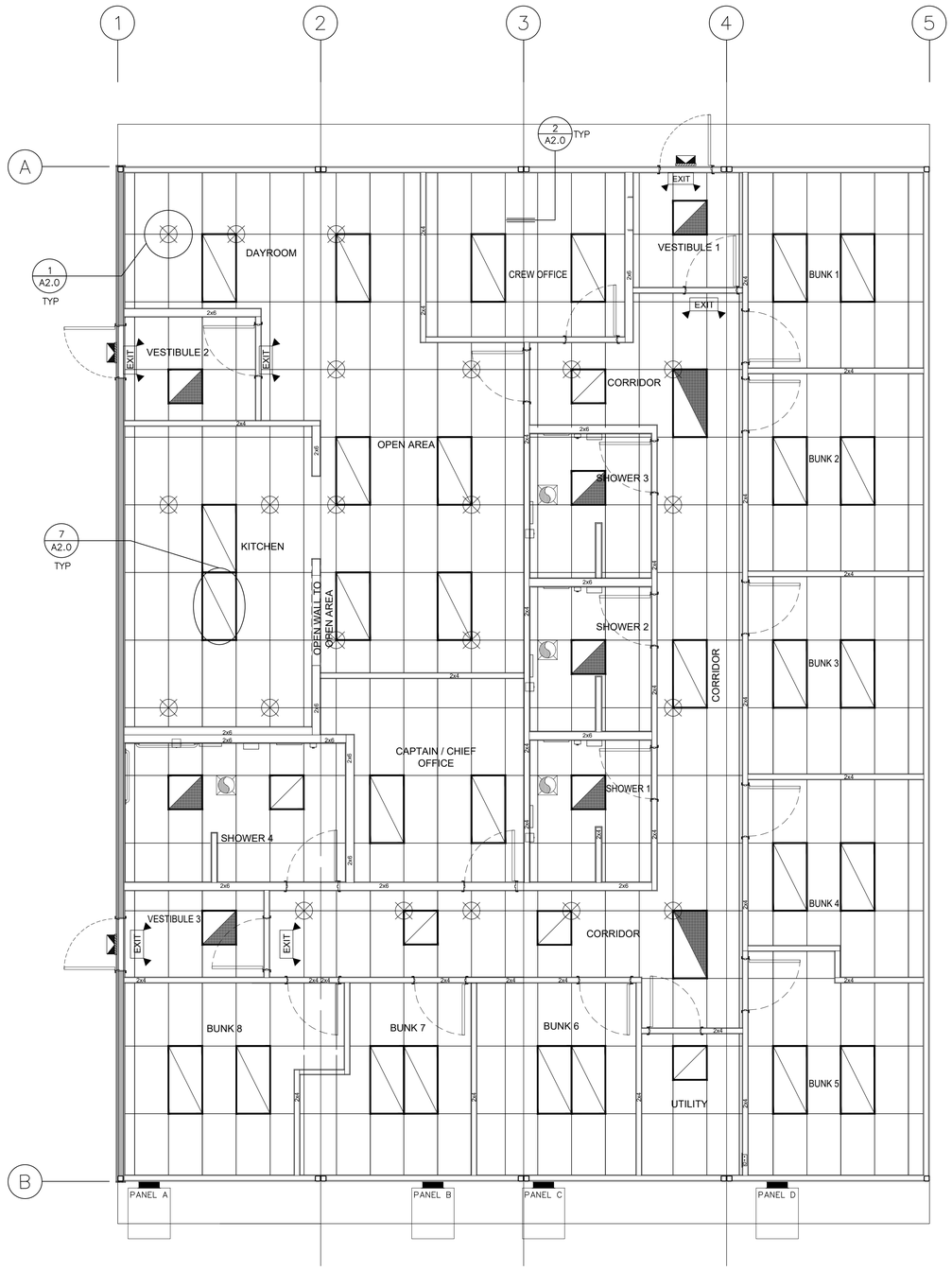

REFLECTED CEILING PLAN

SCALE: 1/4"=1'-0"

LEGEND

SUPPLY AIR DIFFUSERS NOT SHOWN FOR CLARITY (SEE MECHANICAL PLAN)

2'x4' FLUORESCENT DROP-IN FIXTURE (SEE ELECTRICAL PLAN)

4-WAY SPLAY WIRE SYSTEM

48" 24" T-GRID CEILING

INDICATES FREE SIDE. ALL OTHER SIDES SHALL BE FIXED (SEE DETAIL 3/A2.0 OR 20/A2.0)

INDICATES MAIN RUNNER LOCATIONS

FOR NOTES SEE SHEET A2.0

GLOBAL MODULAR incorporated

AURORA DESIGNS · MODTECH Design · MODULAR STRUCTURES INTERNATIONAL, INC. DESIGN

CONTRACTORS LICENSE #837357

NORTHERN CALIFORNIA DIVISON
450 COMMERCE AVE
ATWATER, CA 95301
PHONE: (209) 676-8029
FAX: (209) 676-8067
WEBSITE: WWW.GDVI.NET

SOUTHERN CALIFORNIA DIVISON
1860 CHICAGO AVE., SUITE I-7
RIVERSIDE, CA 92507
PHONE: (951) 686-3633
FAX: (951) 686-3666
WEBSITE: WWW.GDVI.NET

THIS DRAWING AND THE MATERIAL CONTAINED THERE-IN ARE THE PROPERTY OF GLOBAL MODULAR, INC. AND SHALL NOT BE REPRODUCED, COPED OR OTHERWISE DISPOSED OF DIRECTLY OR INDIRECTLY AND SHALL NOT BE USED IN WHOLE OR IN PART TO ASSIST IN THE MAKING OF OR FOR THE PURPOSE OF FURNISHING ANY INFORMATION FOR THE MAKING OF DRAWINGS, PRINTS APPARATUS OR PARTS THEREOF WITHOUT THE FULL KNOWLEDGE AND WRITTEN CONSENT OF GLOBAL MODULAR, INC. ALL PATENTABLE MATERIAL CONTAINED HEREIN AND ORIGINATING WITH GLOBAL MODULAR, INC, SHALL BE THE PROPERTY OF GLOBAL MODULAR, INC.

PROJECT NAME:

48x60
VENTURA
FIRE DEPARTMENT
2269 ALESSANDRO DR, VENTURA, CA 93001

PUBLIC WORKS DEPARTMENT ENGINEERING DIVISION
CITY OF SAN BUENAVENTURA

PRINCIPAL ENGINEER — DATE: 5 May 2026

CITY ENGINEER — DATE: 5/7/2026

ARCHITECT OF RECORD

MFR. STRUCTURAL ENGINEER OF RECORD

MFR. PROJECT SPECIFIC PROFESSIONAL OF RECORD

SHEET TITLE:
REFLECTED CEILING PLAN

REVISIONS
1 -
2 -
3 -
4 -

PROJECT NO.:	00-0000
DRAWN BY:	00
SCALE:	AS NOTED
DATE:	00-00-00

SHEET NUMBER
A2.3

SPEC NO. 2025-010 DWG. NO. 2025-D-010

FOR REFERENCE ONLY

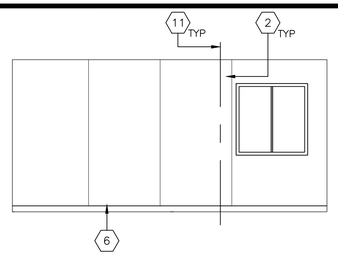

ELEVATION 1

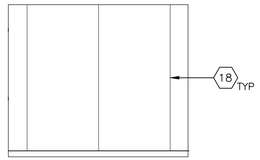

ELEVATION 2

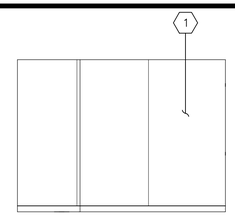

ELEVATION 3

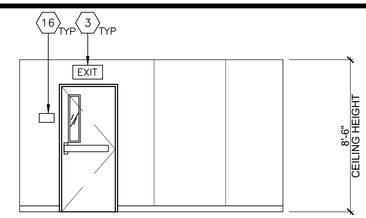

ELEVATION 4

DAYROOM

A

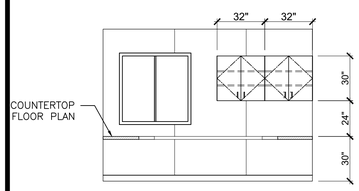

ELEVATION 5

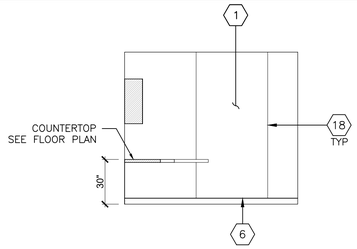

ELEVATION 6

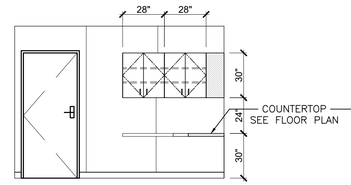

ELEVATION 7

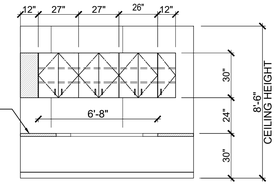

ELEVATION 8

CREW OFFICE

B

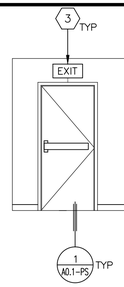

ELEVATION 9

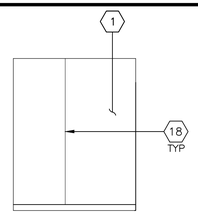

ELEVATION 10

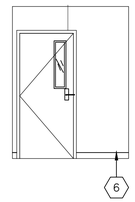

ELEVATION 11

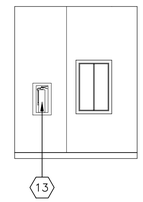

ELEVATION 12

VESTIBULE 1

C

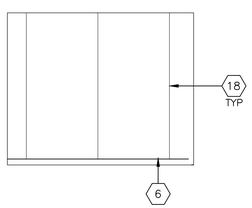

ELEVATION 13

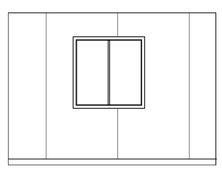

ELEVATION 14

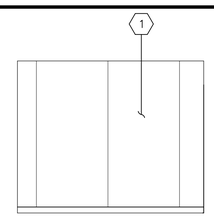

ELEVATION 15

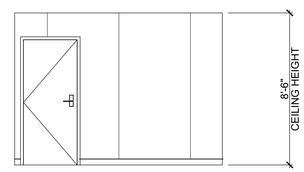

ELEVATION 16

BUNK 1

D

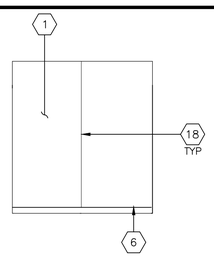

ELEVATION 17

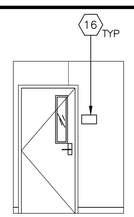

ELEVATION 18

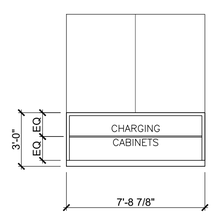

ELEVATION 19

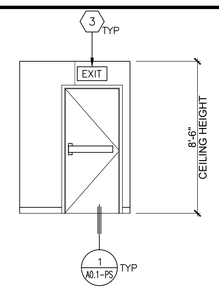

ELEVATION 20

VESTIBULE 2

E

INTERIOR ELEVATIONS 1/4"=1'-0"

KEY NOTES

1. TYPICAL INTERIOR FINISH (PAINT COLOR NACRE)
2. CLOSURE AT MODULAR JOINT
3. LIGHTED EXIT SIGN (SEE ELECTRICAL PLAN)
4. FIRE ALARM PULL STATION (SEE ELECTRICAL PLAN)
5. OCCUPANCY SENSOR OR LIGHT SWITCH (SEE ELECTRICAL PLAN)
6. TOP SET BASE (SEE FINISH SCHEDULE)
7. RETURN AIR GRILL
8. NOT USED
9. OPTIONAL INTERIOR WALL/DOOR
10. THERMOSTAT SEE MECHANICAL PLAN
11. MODULAR JOINT
12. 8'-0" x 4'-0" MARKER BOARD EASIER RAIL PROJECT 4" MAX
13. FIRE EXTINGUISHER IN SEMI-RECESSED CABINET 48" MAX A.F.F. TO F.E. HANDLE
14. 12" DIA ELECTRIC CLOCK (OPTIONAL) (SEE ELECTRICAL PLAN)
15. HORN/STROBE (SEE ELECTRICAL PLAN)
16. TACTILE EXIT SIGNAGE (SEE SIGNAGE SHEET)
17. WALL SYSTEM (SEE WALL FRAMING ELEVATION SHEET)
18. INTERIOR FINISH SEAM
19. OCCUPANT LOAD SIGN (SEE SIGNAGE SHEET)
20. ASSISTIVE LISTENING SIGN (SEE SIGNAGE SHEET)

GLOBAL MODULAR Incorporated

AURORA DESIGNS MODTECH Designs MODULAR STRUCTURES INTERNATIONAL INC DESIGNS

CONTRACTORS LICENSE #837357

NORTHERN CALIFORNIA DIVISON
450 COMMERCE AVE
ATWATER, CA 95301
PHONE: (209) 676-8029
FAX: (209) 676-8067
WEBSITE: WWW.GDVI.NET

SOUTHERN CALIFORNIA DIVISON
1860 CHICAGO AVE., SUITE I-7
RIVERSIDE, CA 92507
PHONE: (951) 686-3633
FAX: (951) 686-3666
WEBSITE: WWW.GDVI.NET

THIS DRAWING AND THE MATERIAL CONTAINED THERE-IN ARE THE PROPERTY OF GLOBAL MODULAR, INC. AND SHALL NOT BE REPRODUCED, COPED OR OTHERWISE DISPOSED OF DIRECTLY OR INDIRECTLY AND SHALL NOT BE USED IN WHOLE OR IN PART TO ASSIST IN THE MAKING OF OR FOR THE PURPOSE OF FURNISHING ANY INFORMATION FOR THE MAKING OF DRAWINGS, PRINTS APPARATUS OR PARTS THEREOF WITHOUT THE FULL KNOWLEDGE AND WRITTEN CONSENT OF GLOBAL MODULAR, INC. ALL PATENTABLE MATERIAL CONTAINED HEREIN AND ORIGINATING WITH GLOBAL MODULAR, INC, SHALL BE THE PROPERTY OF GLOBAL MODULAR, INC.

PROJECT NAME:

48x60
VENTURA
FIRE DEPARTMENT
2269 ALESSANDRO DR, VENTURA, CA 93001

PUBLIC WORKS DEPARTMENT ENGINEERING DIVISION
CITY OF SAN BUENAVENTURA

PRINCIPAL ENGINEER — DATE: 5 May 2026

CITY ENGINEER — DATE: 5/7/2026

ARCHITECT OF RECORD

MFR. STRUCTURAL ENGINEER OF RECORD

MFR. PROJECT SPECIFIC PROFESSIONAL OF RECORD

SHEET TITLE:
INTERIOR ELEVATIONS

REVISIONS
1 -
2 -
3 -
4 -

PROJECT NO.:	00-0000
DRAWN BY:	00
SCALE:	AS NOTED
DATE:	00-00-00

SHEET NUMBER
A4.1

SPEC NO. 2025-010 DWG. NO. 2025-D-010

FOR REFERENCE ONLY

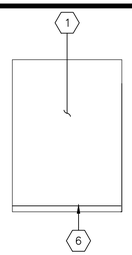

ELEVATION 21

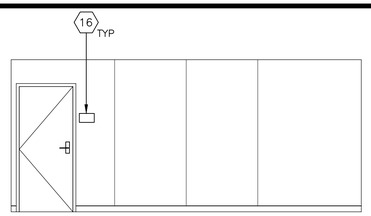

ELEVATION 22

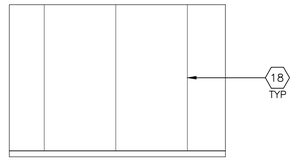

ELEVATION 23

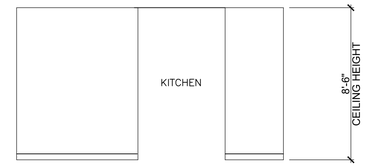

ELEVATION 24

OPEN AREA

F

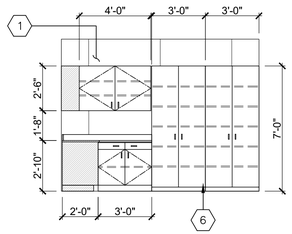

ELEVATION 25

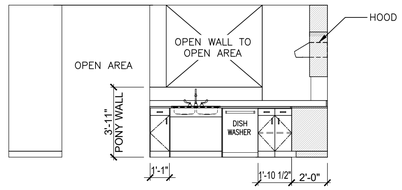

ELEVATION 26

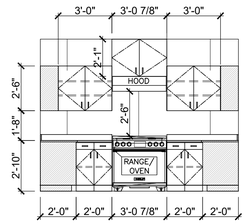

ELEVATION 27

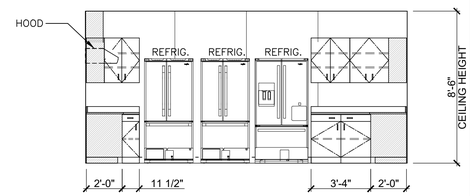

ELEVATION 28

KITCHEN

G

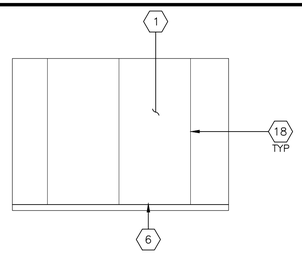

ELEVATION 29

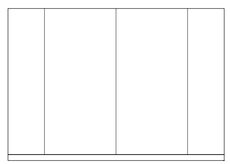

ELEVATION 30

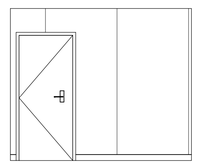

ELEVATION 31

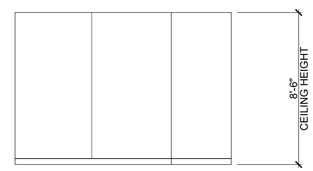

ELEVATION 32

CAPTAIN/ CHIEF OFFICE

H

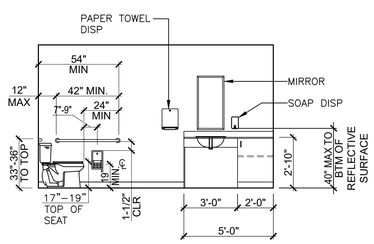

ELEVATION 33

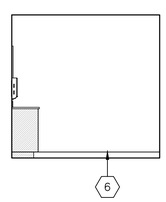

ELEVATION 34

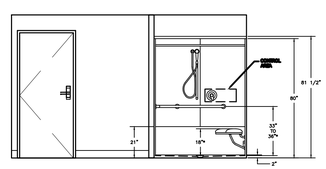

ELEVATION 35

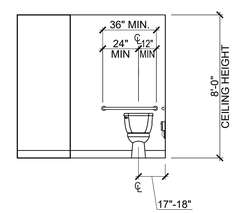

ELEVATION 36

SHOWER 3

J

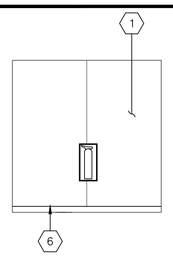

ELEVATION 37

ELEVATION 38

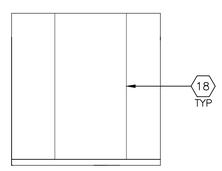

ELEVATION 39

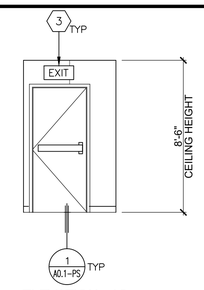

ELEVATION 40

VESTIBULE 3

K

INTERIOR ELEVATIONS 1/4"=1'-0"

FOR REFERENCE ONLY

KEY NOTES

1. TYPICAL INTERIOR FINISH (PAINT COLOR NACRE)
2. CLOSURE AT MODULAR JOINT
3. LIGHTED EXIT SIGN (SEE ELECTRICAL PLAN)
4. FIRE ALARM PULL STATION (SEE ELECTRICAL PLAN)
5. OCCUPANCY SENSOR OR LIGHT SWITCH (SEE ELECTRICAL PLAN)
6. TOP SET BASE (SEE FINISH SCHEDULE)
7. RETURN AIR GRILL
8. ELECTRICAL PANEL +48" TO HANDLE
9. OPTIONAL INTERIOR WALL/DOOR
10. THERMOSTAT SEE MECHANICAL PLAN
11. MODULAR JOINT
12. 8'–0" x 4'–0" MARKER BOARD EASIER RAIL PROJECT 4" MAX
13. FIRE EXTINGUISHER IN SEMI–RECESSED CABINET 48" MAX A.F.F. TO F.E. HANDLE
14. 12" DIA ELECTRIC CLOCK (OPTIONAL) (SEE ELECTRICAL PLAN)
15. HORN/STROBE (SEE ELECTRICAL PLAN)
16. TACTILE EXIT SIGNAGE (SEE SIGNAGE SHEET)
17. WALL SYSTEM (SEE WALL FRAMING ELEVATION SHEET)
18. INTERIOR FINISH SEAM
19. OCCUPANT LOAD SIGN (SEE SIGNAGE SHEET)
20. ASSISTIVE LISTENING SIGN (SEE SIGNAGE SHEET)

GLOBAL MODULAR Incorporated
AURORA DESIGNS · MODTECH Designs · MODULAR STRUCTURES INTERNATIONAL, INC. DESIGNS

CONTRACTORS LICENSE #837357

NORTHERN CALIFORNIA DIVISON
450 COMMERCE AVE
ATWATER, CA 95301
PHONE: (209) 676–8029
FAX: (209) 676–8067
WEBSITE: WWW.GDVI.NET

SOUTHERN CALIFORNIA DIVISON
1860 CHICAGO AVE., SUITE I–7
RIVERSIDE, CA 92507
PHONE: (951) 686–3633
FAX: (951) 686–3666
WEBSITE: WWW.GDVI.NET

THIS DRAWING AND THE MATERIAL CONTAINED THERE-IN ARE THE PROPERTY OF GLOBAL MODULAR, INC. AND SHALL NOT BE REPRODUCED, COPED OR OTHERWISE DISPOSED OF DIRECTLY OR INDIRECTLY AND SHALL NOT BE USED IN WHOLE OR IN PART TO ASSIST IN THE MAKING OF OR FOR THE PURPOSE OF FURNISHING ANY INFORMATION FOR THE MAKING OF DRAWINGS, PRINTS APPARATUS OR PARTS THEREOF WITHOUT THE FULL KNOWLEDGE AND WRITTEN CONSENT OF GLOBAL MODULAR, INC. ALL PATENTABLE MATERIAL CONTAINED HEREIN AND ORIGINATING WITH GLOBAL MODULAR, INC, SHALL BE THE PROPERTY OF GLOBAL MODULAR, INC.

PROJECT NAME:

48x60
VENTURA
FIRE DEPARTMENT
2269 ALESSANDRO DR, VENTURA, CA 93001

PUBLIC WORKS DEPARTMENT ENGINEERING DIVISION
CITY OF SAN BUENAVENTURA

PRINCIPAL ENGINEER — DATE: 5 May 2026

CITY ENGINEER — DATE: 5/7/2026

ARCHITECT OF RECORD

MFR. STRUCTURAL ENGINEER OF RECORD

MFR. PROJECT SPECIFIC PROFESSIONAL OF RECORD

SHEET TITLE:

INTERIOR
ELEVATIONS

REVISIONS
1 -
2 -
3 -
4 -

PROJECT NO.:	00-0000
DRAWN BY:	00
SCALE:	AS NOTED
DATE:	00-00-00

SHEET NUMBER

A4.2

SPEC NO. 2025-010 DWG. NO. 2025-D-010

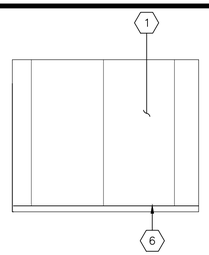

ELEVATION 41

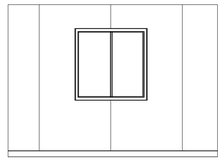

ELEVATION 42

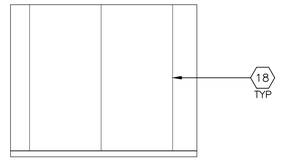

ELEVATION 43

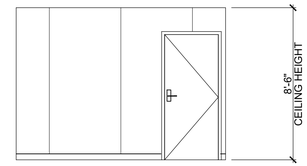

ELEVATION 44

BUNK 2

L

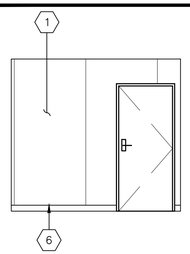

ELEVATION 45

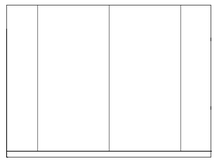

ELEVATION 46

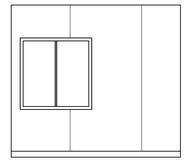

ELEVATION 47

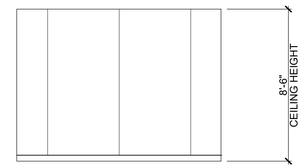

ELEVATION 48

BUNK 6

M

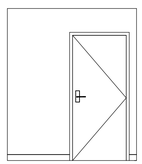

ELEVATION 49

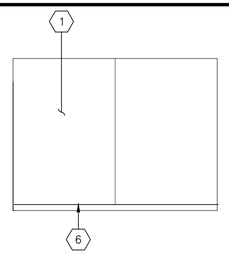

ELEVATION 50

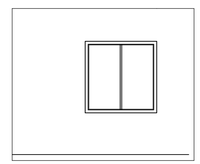

ELEVATION 51

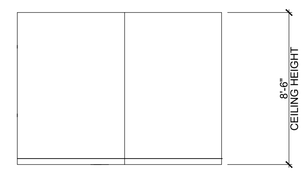

ELEVATION 52

BUNK 7

N

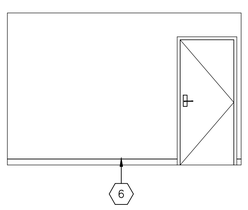

ELEVATION 53

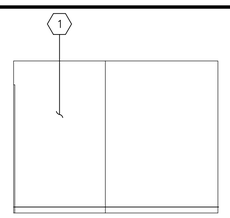

ELEVATION 54

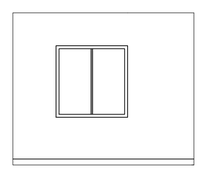

ELEVATION 55

ELEVATION 56

BUNK 8

P

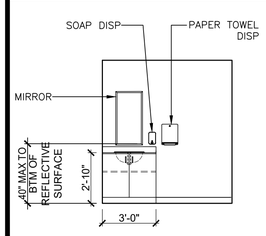

ELEVATION 57

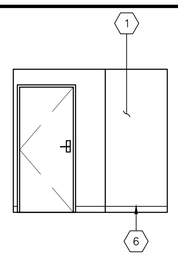

ELEVATION 58

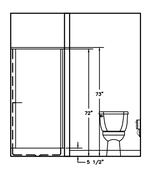

ELEVATION 59

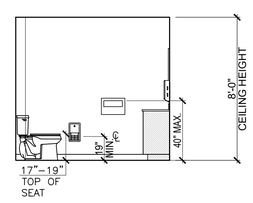

ELEVATION 60

UNISEX RESTROOM/ SHOWER 1 & 2

Q

INTERIOR ELEVATIONS 1/4"=1'-0"

FOR REFERENCE ONLY

KEY NOTES

1. TYPICAL INTERIOR FINISH (PAINT COLOR NACRE)
2. CLOSURE AT MODULAR JOINT
3. LIGHTED EXIT SIGN (SEE ELECTRICAL PLAN)
4. FIRE ALARM PULL STATION (SEE ELECTRICAL PLAN)
5. OCCUPANCY SENSOR OR LIGHT SWITCH (SEE ELECTRICAL PLAN)
6. TOP SET BASE (SEE FINISH SCHEDULE)
7. RETURN AIR GRILL
8. ELECTRICAL PANEL +48" TO HANDLE
9. OPTIONAL INTERIOR WALL/DOOR
10. THERMOSTAT SEE MECHANICAL PLAN
11. MODULAR JOINT
12. 8'-0" x 4'-0" MARKER BOARD EASIER RAIL PROJECT 4" MAX
13. FIRE EXTINGUISHER IN SEMI-RECESSED CABINET 48" MAX A.F.F. TO F.E. HANDLE
14. 12" DIA ELECTRIC CLOCK (OPTIONAL) (SEE ELECTRICAL PLAN)
15. HORN/STROBE (SEE ELECTRICAL PLAN)
16. TACTILE EXIT SIGNAGE (SEE SIGNAGE SHEET)
17. WALL SYSTEM (SEE WALL FRAMING ELEVATION SHEET)
18. INTERIOR FINISH SEAM
19. OCCUPANT LOAD SIGN (SEE SIGNAGE SHEET)
20. ASSISTIVE LISTENING SIGN (SEE SIGNAGE SHEET)

GLOBAL MODULAR Incorporated
AURORA DESIGNS · MODTECH Designs · MODULAR STRUCTURES INTERNATIONAL, INC. DESIGNS

CONTRACTORS LICENSE #837357

NORTHERN CALIFORNIA DIVISON
450 COMMERCE AVE
ATWATER, CA 95301
PHONE: (209) 676-8029
FAX: (209) 676-8067
WEBSITE: WWW.GDVI.NET

SOUTHERN CALIFORNIA DIVISON
1860 CHICAGO AVE., SUITE I-7
RIVERSIDE, CA 92507
PHONE: (951) 686-3633
FAX: (951) 686-3666
WEBSITE: WWW.GDVI.NET

THIS DRAWING AND THE MATERIAL CONTAINED THERE-IN ARE THE PROPERTY OF GLOBAL MODULAR, INC. AND SHALL NOT BE REPRODUCED, COPED OR OTHERWISE DISPOSED OF DIRECTLY OR INDIRECTLY AND SHALL NOT BE USED IN WHOLE OR IN PART TO ASSIST IN THE MAKING OF OR FOR THE PURPOSE OF FURNISHING ANY INFORMATION FOR THE MAKING OF DRAWINGS, PRINTS APPARATUS OR PARTS THEREOF WITHOUT THE FULL KNOWLEDGE AND WRITTEN CONSENT OF GLOBAL MODULAR, INC. ALL PATENTABLE MATERIAL CONTAINED HEREIN AND ORIGINATING WITH GLOBAL MODULAR, INC, SHALL BE THE PROPERTY OF GLOBAL MODULAR, INC.

PROJECT NAME:

48x60
VENTURA
FIRE DEPARTMENT
2269 ALESSANDRO DR, VENTURA, CA 93001

PUBLIC WORKS DEPARTMENT ENGINEERING DIVISION
CITY OF SAN BUENAVENTURA

PRINCIPAL ENGINEER — DATE: 5 May 2026

CITY ENGINEER — DATE: 5/7/2026

ARCHITECT OF RECORD

MFR. STRUCTURAL ENGINEER OF RECORD

MFR. PROJECT SPECIFIC PROFESSIONAL OF RECORD

SHEET TITLE:
INTERIOR ELEVATIONS

REVISIONS
1 -
2 -
3 -
4 -

PROJECT NO.:	00-0000
DRAWN BY:	00
SCALE:	AS NOTED
DATE:	00-00-00

SHEET NUMBER
A4.3
SPEC NO. 2025-010 DWG. NO. 2025-D-010

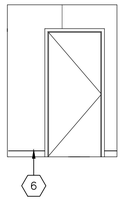

ELEVATION 61

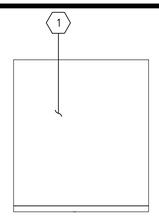

ELEVATION 62

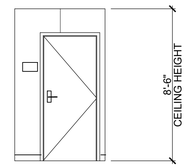

ELEVATION 63

CORRIDOR R

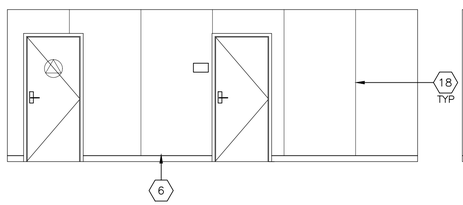

ELEVATION 64

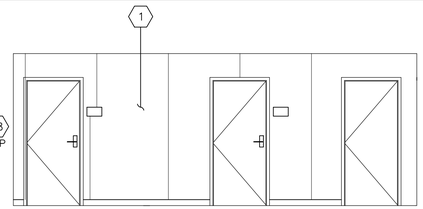

ELEVATION 65

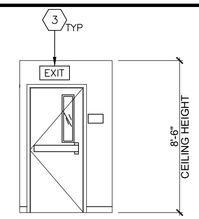

ELEVATION 66

CORRIDOR S

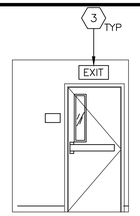

ELEVATION 67

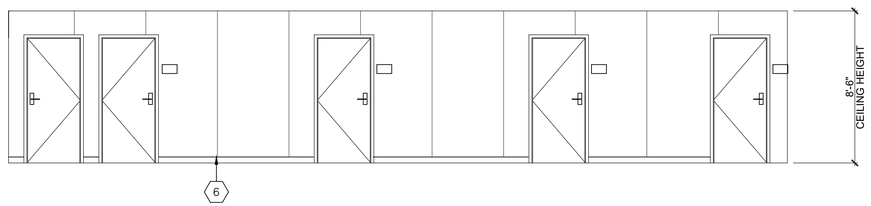

ELEVATION 68

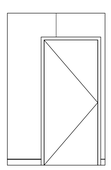

ELEVATION 69

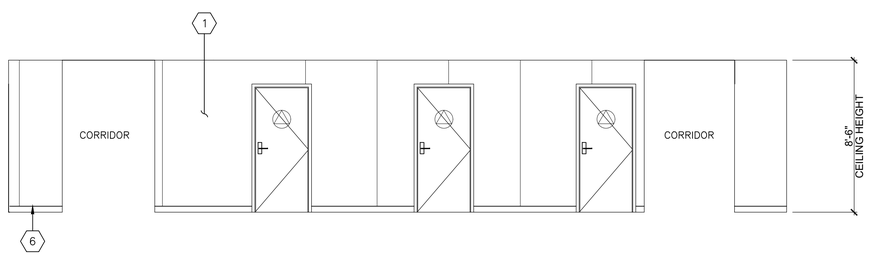

ELEVATION 70

CORRIDOR T

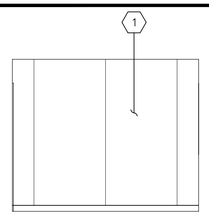

ELEVATION 71

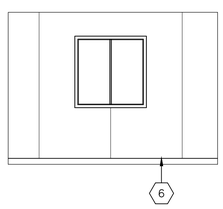

ELEVATION 72

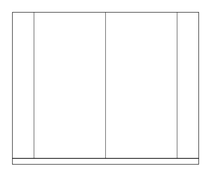

ELEVATION 73

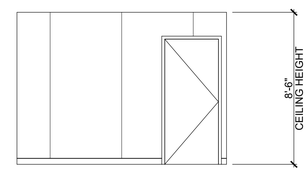

ELEVATION 74

BUNK 3 U

INTERIOR ELEVATIONS 1/4"=1'-0"

FOR REFERENCE ONLY

KEY NOTES

1. TYPICAL INTERIOR FINISH (PAINT COLOR NACRE)
2. CLOSURE AT MODULAR JOINT
3. LIGHTED EXIT SIGN (SEE ELECTRICAL PLAN)
4. FIRE ALARM PULL STATION (SEE ELECTRICAL PLAN)
5. OCCUPANCY SENSOR OR LIGHT SWITCH (SEE ELECTRICAL PLAN)
6. TOP SET BASE (SEE FINISH SCHEDULE)
7. RETURN AIR GRILL
8. ELECTRICAL PANEL +48" TO HANDLE
9. OPTIONAL INTERIOR WALL/DOOR
10. THERMOSTAT SEE MECHANICAL PLAN
11. MODULAR JOINT
12. 8'-0" x 4'-0" MARKER BOARD EASIER RAIL PROJECT 4" MAX
13. FIRE EXTINGUISHER IN SEMI-RECESSED CABINET 48" MAX A.F.F. TO F.E. HANDLE
14. 12" DIA ELECTRIC CLOCK (OPTIONAL) (SEE ELECTRICAL PLAN)
15. HORN/STROBE (SEE ELECTRICAL PLAN)
16. TACTILE EXIT SIGNAGE (SEE SIGNAGE SHEET)
17. WALL SYSTEM (SEE WALL FRAMING ELEVATION SHEET)
18. INTERIOR FINISH SEAM
19. OCCUPANT LOAD SIGN (SEE SIGNAGE SHEET)
20. ASSISTIVE LISTENING SIGN (SEE SIGNAGE SHEET)

GLOBAL MODULAR Incorporated
AURORA DESIGNS MODTECH Designs MODULAR STRUCTURES INTERNATIONAL, INC. DESIGNS

CONTRACTORS LICENSE #837357

NORTHERN CALIFORNIA DIVISON
450 COMMERCE AVE
ATWATER, CA 95301
PHONE: (209) 676-8029
FAX: (209) 676-8067
WEBSITE: WWW.GDVI.NET

SOUTHERN CALIFORNIA DIVISON
1860 CHICAGO AVE., SUITE I-7
RIVERSIDE, CA 92507
PHONE: (951) 686-3633
FAX: (951) 686-3666
WEBSITE: WWW.GDVI.NET

THIS DRAWING AND THE MATERIAL CONTAINED THERE-IN ARE THE PROPERTY OF GLOBAL MODULAR, INC. AND SHALL NOT BE REPRODUCED, COPED OR OTHERWISE DISPOSED OF DIRECTLY OR INDIRECTLY AND SHALL NOT BE USED IN WHOLE OR IN PART TO ASSIST IN THE MAKING OF OR FOR THE PURPOSE OF FURNISHING ANY INFORMATION FOR THE MAKING OF DRAWINGS, PRINTS APPARATUS OR PARTS THEREOF WITHOUT THE FULL KNOWLEDGE AND WRITTEN CONSENT OF GLOBAL MODULAR, INC. ALL PATENTABLE MATERIAL CONTAINED HEREIN AND ORIGINATING WITH GLOBAL MODULAR, INC, SHALL BE THE PROPERTY OF GLOBAL MODULAR, INC.

PROJECT NAME:

48x60
VENTURA
FIRE DEPARTMENT
2269 ALESSANDRO DR, VENTURA, CA 93001

PUBLIC WORKS DEPARTMENT ENGINEERING DIVISION
CITY OF SAN BUENAVENTURA

PRINCIPAL ENGINEER — DATE 5 May 2026

CITY ENGINEER — DATE 5/7/2026

ARCHITECT OF RECORD

MFR. STRUCTURAL ENGINEER OF RECORD

MFR. PROJECT SPECIFIC PROFESSIONAL OF RECORD

SHEET TITLE:
INTERIOR ELEVATIONS

REVISIONS
1 -
2 -
3 -
4 -

PROJECT NO.:	00-0000
DRAWN BY:	00
SCALE:	AS NOTED
DATE:	00-00-00

SHEET NUMBER
A4.4
SPEC NO. 2025-010 DWG. NO. 2025-D-010

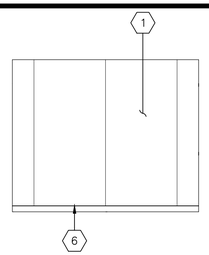

ELEVATION 75

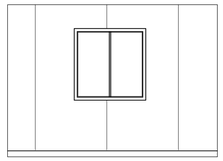

ELEVATION 76

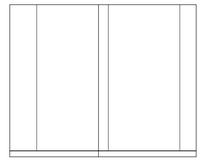

ELEVATION 77

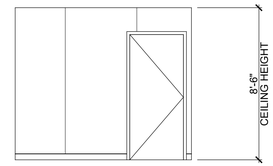

ELEVATION 78

BUNK 4

V

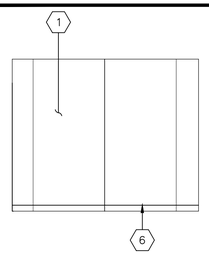

ELEVATION 79

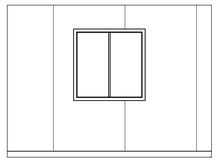

ELEVATION 80

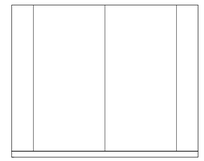

ELEVATION 81

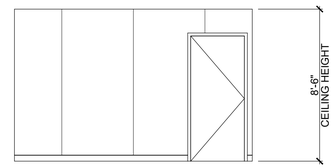

ELEVATION 82

BUNK 5

BUNK 5

W

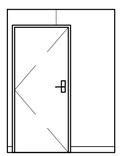

ELEVATION 83

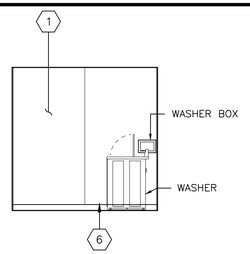

ELEVATION 84

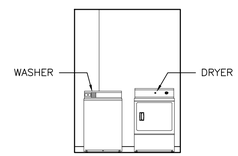

ELEVATION 85

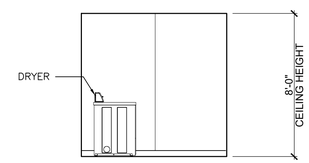

ELEVATION 86

UTILITY

X

KEY NOTES

1. TYPICAL INTERIOR FINISH (PAINT COLOR NACRE)
2. CLOSURE AT MODULAR JOINT
3. LIGHTED EXIT SIGN (SEE ELECTRICAL PLAN)
4. FIRE ALARM PULL STATION (SEE ELECTRICAL PLAN)
5. OCCUPANCY SENSOR OR LIGHT SWITCH (SEE ELECTRICAL PLAN)
6. TOP SET BASE (SEE FINISH SCHEDULE)
7. RETURN AIR GRILL
8. ELECTRICAL PANEL +48" TO HANDLE
9. OPTIONAL INTERIOR WALL/DOOR
10. THERMOSTAT SEE MECHANICAL PLAN
11. MODULAR JOINT
12. 8'-0" x 4'-0" MARKER BOARD EASIER RAIL PROJECT 4" MAX
13. FIRE EXTINGUISHER IN SEMI-RECESSED CABINET 48" MAX A.F.F. TO F.E. HANDLE
14. 12" DIA ELECTRIC CLOCK (OPTIONAL) (SEE ELECTRICAL PLAN)
15. HORN/STROBE (SEE ELECTRICAL PLAN)
16. TACTILE EXIT SIGNAGE (SEE SIGNAGE SHEET)
17. WALL SYSTEM (SEE WALL FRAMING ELEVATION SHEET)
18. INTERIOR FINISH SEAM
19. OCCUPANT LOAD SIGN (SEE SIGNAGE SHEET)
20. ASSISTIVE LISTENING SIGN (SEE SIGNAGE SHEET)

INTERIOR ELEVATIONS 1/4"=1'-0"

FOR REFERENCE ONLY

GLOBAL MODULAR Incorporated
AURORA DESIGNS MODTECH Designs MODULAR STRUCTURES INTERNATIONAL, INC. DESIGNS
CONTRACTORS LICENSE #837357

NORTHERN CALIFORNIA DIVISON
450 COMMERCE AVE
ATWATER, CA 95301
PHONE: (209) 676-8029
FAX: (209) 676-8067
WEBSITE: WWW.GDVI.NET

SOUTHERN CALIFORNIA DIVISON
1860 CHICAGO AVE., SUITE I-7
RIVERSIDE, CA 92507
PHONE: (951) 686-3633
FAX: (951) 686-3666
WEBSITE: WWW.GDVI.NET

THIS DRAWING AND THE MATERIAL CONTAINED THERE-IN ARE THE PROPERTY OF GLOBAL MODULAR, INC. AND SHALL NOT BE REPRODUCED, COPED OR OTHERWISE DISPOSED OF DIRECTLY OR INDIRECTLY AND SHALL NOT BE USED IN WHOLE OR IN PART TO ASSIST IN THE MAKING OF OR FOR THE PURPOSE OF FURNISHING ANY INFORMATION FOR THE MAKING OF DRAWINGS, PRINTS APPARATUS OR PARTS THEREOF WITHOUT THE FULL KNOWLEDGE AND WRITTEN CONSENT OF GLOBAL MODULAR, INC. ALL PATENTABLE MATERIAL CONTAINED HEREIN AND ORIGINATING WITH GLOBAL MODULAR, INC, SHALL BE THE PROPERTY OF GLOBAL MODULAR, INC.

PROJECT NAME:

48x60
VENTURA
FIRE DEPARTMENT
2269 ALESSANDRO DR, VENTURA, CA 93001

PUBLIC WORKS DEPARTMENT ENGINEERING DIVISION
CITY OF SAN BUENAVENTURA

PRINCIPAL ENGINEER — DATE: 5 May 2026

CITY ENGINEER — DATE: 5/7/2026

ARCHITECT OF RECORD

MFR. STRUCTURAL ENGINEER OF RECORD

MFR. PROJECT SPECIFIC PROFESSIONAL OF RECORD

SHEET TITLE:
INTERIOR ELEVATIONS

REVISIONS
1 -
2 -
3 -
4 -

PROJECT NO.:	00-0000
DRAWN BY:	00
SCALE:	AS NOTED
DATE:	00-00-00

SHEET NUMBER
A4.5
SPEC NO. 2025-010 DWG. NO. 2025-D-010

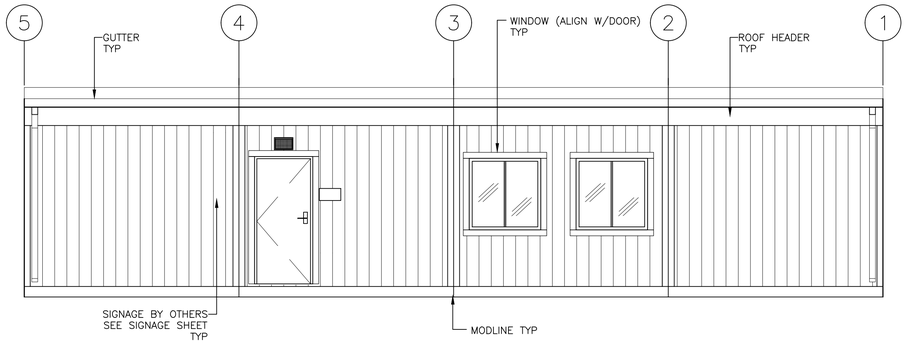

ELEVATION A

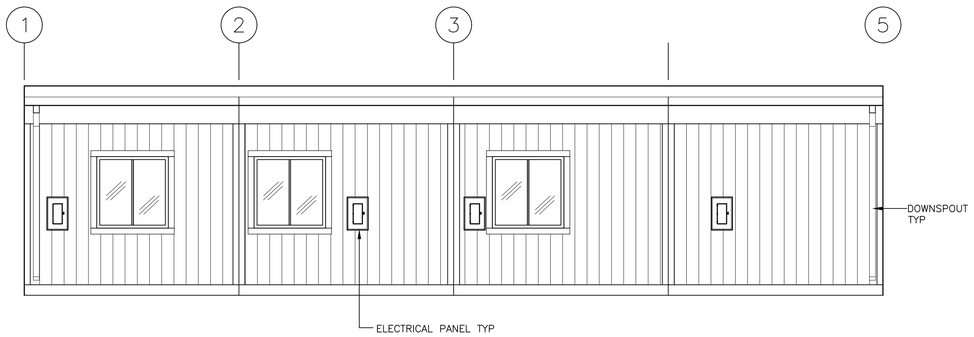

ELEVATION B

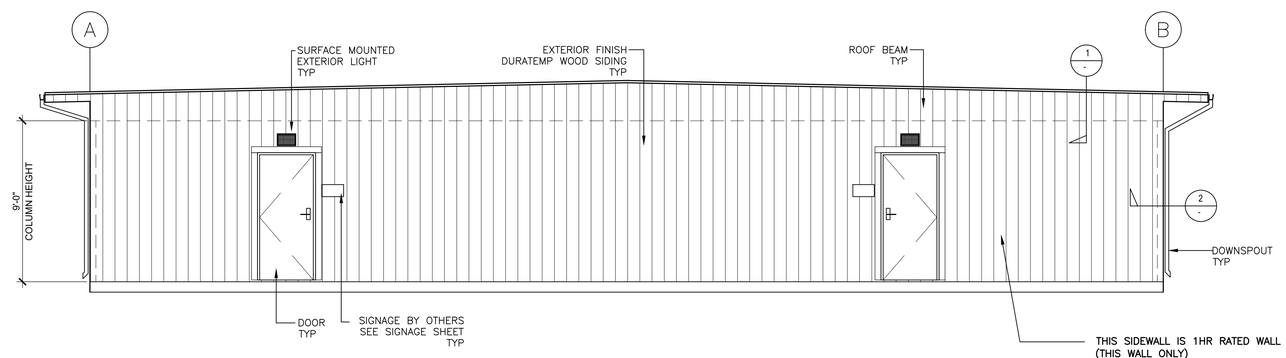

ELEVATION C

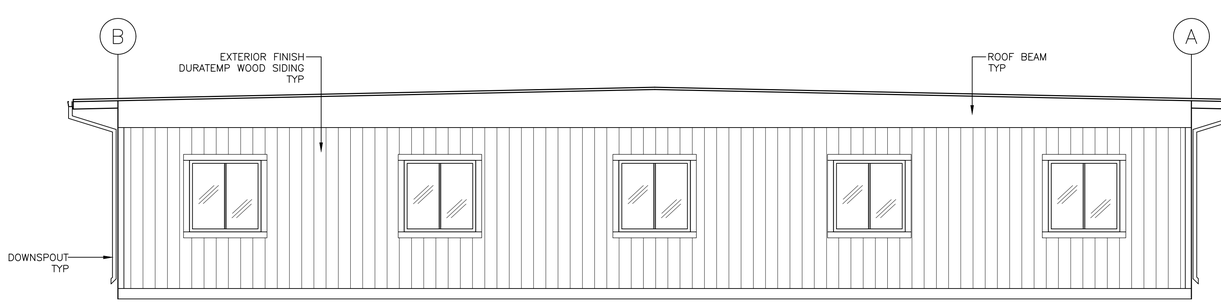

ELEVATION D

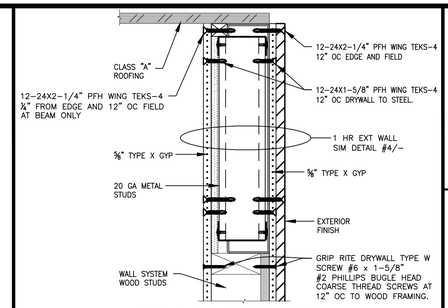

EXT 1 HR ROOF BEAM

SCALE: 3"=1'-0"

1

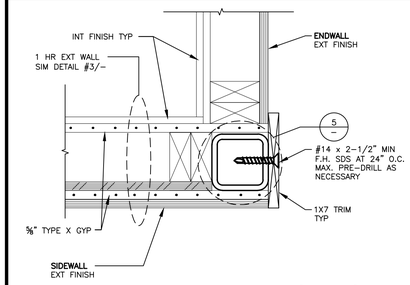

1 HR COLUMN WOOD STUDS (SIDING)

SCALE: 3"=1'-0"

2

GA FILE NO WP 3614

GYPSUM WALLBOARD, WOOD STUDS

ONE LAYER 5/8" TYPE 'X' GYPSUM WALLBOARD OR GYPSUM VENEER BASE APPLIED PARALLEL OR AT RIGHT ANGLES TO EACH SIDE OF 2x4 WOOD STUDS 16" OC WITH 1 1/4" TYPE W DRYWALL SCREWS 12" OC

JOINTS STAGGERED 16" ON OPPOSITE SIDES (LOAD BEARING)

THICKNESS: 4 3/4"
APPROX. WEIGHT: 7 PSF
FIRE TEST: SWRI 01-4511-619[1], 3-94
SOUND TEST: SEE WP 3520 (G&H NG-246FT, 7-2-65)

1 HOUR INTERIOR PARTITION-WOOD STUD

SCALE: NTS

3

GA FILE NO. WP 1072

GYPSUM WALLBOARD, STEEL STUDS

ONE LAYER 5/8" TYPE 'X' GYPSUM WALLBOARD OR VENEER BASE APPLIED PARALLEL OR AT RIGHT ANGLES TO EACH SIDE OF 3 5/8"x20 GA STEEL STUDS 16" OC WITH 1" TYPE S DRYWALL SCREWS 8" OC AT VERTICAL JOINTS AND 12" OC AT FLOOR AND CEILING RUNNERS AND INTERMEDIATE STUDS

JOINTS STAGGERED 24" ON EACH SIDE AND ON OPPOSITE SIDES SOUND TESTED WITH 3 1/2" GLASS FIBER FRICTION FIT IN STUD SPACE (NLB)

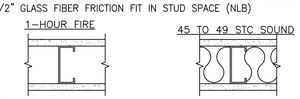

THICKNESS: 4 7/8"
APPROX. WEIGHT: 6 PSF
FIRE TEST: SEE WP 1350 (FM WP-45, 6-19-68; OSU T-1770, 8-61; ULC 79T484, 79T500, 79T497, 8-12-81, ULC DESIGN W415)
SOUND TEST: NRCC 816-NV, 2-3-81

1 HOUR INTERIOR PARTITION-STEEL STUD

SCALE: NTS

4

NOTES:

1. COLUMN SHALL BE FREE OF DIRT, LOOSE SCALE AND OIL. COLUMN SHALL BE PRIMED WITH 0.003 INCHES DRY FILM THICKNESS OF MODIFIED ALKYD, EPOXY, ORGANIC ZINC OR INORGANIC ZINC BASED PRIMER.
2. MASTIC COATINGS – COATING SPRAY, BRUSH OR TROWEL APPLIED DIRECTLY FROM CONTAINERS TO DESIRED THICKNESS. SEE TABLE BELOW
3. REFER TO SHEET A0.1 FOR SPECIAL INSPECTION REQUIRMENTS

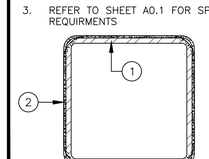

HSS: 4 x 4 x 3/8
0.073 INCHES
24 HRS
86° F
SHORE D: 70 (CURED)

FIRE RATED COLUMN – INTUMESCENT

5

GLOBAL MODULAR Incorporated
AURORA DESIGNS · MODTECH Designs · MODULAR STRUCTURES INTERNATIONAL INC DESIGNS
CONTRACTORS LICENSE #837357

NORTHERN CALIFORNIA DIVISON
450 COMMERCE AVE
ATWATER, CA 95301
PHONE: (209) 676-8029
FAX: (209) 676-8067
WEBSITE: WWW.GDVI.NET

SOUTHERN CALIFORNIA DIVISON
1860 CHICAGO AVE., SUITE I-7
RIVERSIDE, CA 92507
PHONE: (951) 686-3633
FAX: (951) 686-3666
WEBSITE: WWW.GDVI.NET

THIS DRAWING AND THE MATERIAL CONTAINED THERE-IN ARE THE PROPERTY OF GLOBAL MODULAR, INC. AND SHALL NOT BE REPRODUCED, COPED OR OTHERWISE DISPOSED OF DIRECTLY OR INDIRECTLY AND SHALL NOT BE USED IN WHOLE OR IN PART TO ASSIST IN THE MAKING OF OR FOR THE PURPOSE OF FURNISHING ANY INFORMATION FOR THE MAKING OF DRAWINGS, PRINTS APPARATUS OR PARTS THEREOF WITHOUT THE FULL KNOWLEDGE AND WRITTEN CONSENT OF GLOBAL MODULAR, INC. ALL PATENTABLE MATERIAL CONTAINED HEREIN AND ORIGINATING WITH GLOBAL MODULAR, INC, SHALL BE THE PROPERTY OF GLOBAL MODULAR, INC.

PROJECT NAME:

48x60
VENTURA
FIRE DEPARTMENT
2269 ALESSANDRO DR, VENTURA, CA 93001

PUBLIC WORKS DEPARTMENT ENGINEERING DIVISION
CITY OF SAN BUENAVENTURA

PRINCIPAL ENGINEER — DATE: 5 May 2026

CITY ENGINEER — DATE: 5/7/2026

ARCHITECT OF RECORD

MFR. STRUCTURAL ENGINEER OF RECORD

MFR. PROJECT SPECIFIC PROFESSIONAL OF RECORD

SHEET TITLE:

EXTERIOR ELEVATIONS

REVISIONS

1 -
2 -
3 -
4 -

PROJECT NO.:	00-0000
DRAWN BY:	00
SCALE:	AS NOTED
DATE:	00-00-00

SHEET NUMBER

A5.4

SPEC NO. 2025-010 DWG. NO. 2025-D-010

FOR REFERENCE ONLY

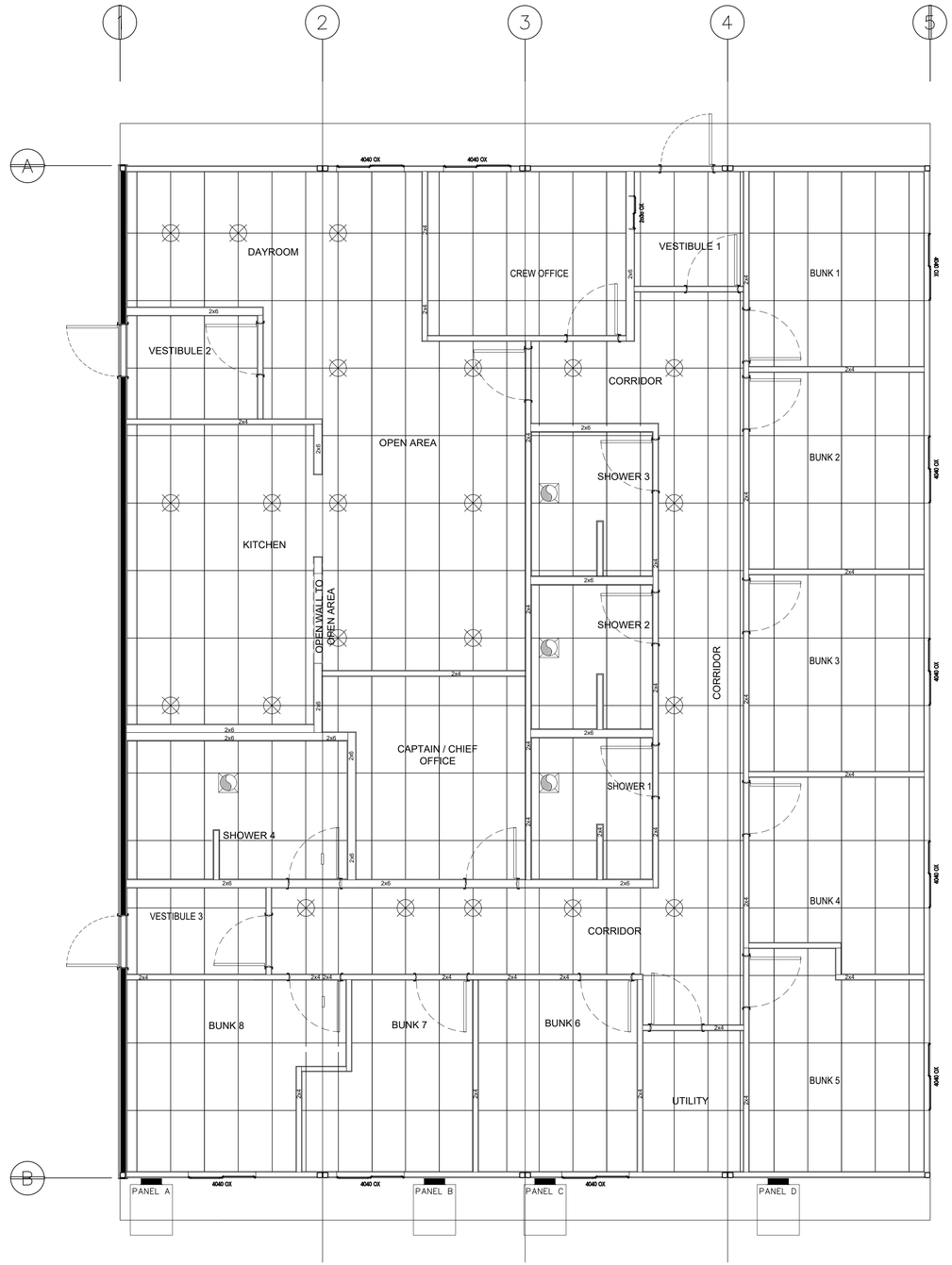

AIR CONDITIONING PLAN VIEW

SCALE: 1/4" = 1'-0"

NOTES:

1. REFER TO SHEET M0.0 FOR DETAILS, LEGEND AND SCHEDULES.
2. BUILDING OVERHANG PROJECTION MUST BE A MINIMUM 36" LONG FOR ANY HVAC UNIT 13.00 SEER AND GREATER.

GLOBAL MODULAR Incorporated

AURORA DESIGNS · MODTECH Designs · MODULAR STRUCTURES INTERNATIONAL, INC. DESIGNS

CONTRACTORS LICENSE #837357

NORTHERN CALIFORNIA DIVISON
450 COMMERCE AVE
ATWATER, CA 95301
PHONE: (209) 676-8029
FAX: (209) 676-8067
WEBSITE: WWW.GDVI.NET

SOUTHERN CALIFORNIA DIVISON
1860 CHICAGO AVE., SUITE I-7
RIVERSIDE, CA 92507
PHONE: (951) 686-3633
FAX: (951) 686-3666
WEBSITE: WWW.GDVI.NET

THIS DRAWING AND THE MATERIAL CONTAINED THERE-IN ARE THE PROPERTY OF GLOBAL MODULAR, INC. AND SHALL NOT BE REPRODUCED, COPIED OR OTHERWISE DISPOSED OF DIRECTLY OR INDIRECTLY AND SHALL NOT BE USED IN WHOLE OR IN PART TO ASSIST IN THE MAKING OF OR FOR THE PURPOSE OF FURNISHING ANY INFORMATION FOR THE MAKING OF DRAWINGS, PRINTS APPARATUS OR PARTS THEREOF WITHOUT THE FULL KNOWLEDGE AND WRITTEN CONSENT OF GLOBAL MODULAR, INC. ALL PATENTABLE MATERIAL CONTAINED HEREIN AND ORIGINATING WITH GLOBAL MODULAR, INC, SHALL BE THE PROPERTY OF GLOBAL MODULAR, INC.

PROJECT NAME:

48x60
VENTURA
FIRE DEPARTMENT
2269 ALESSANDRO DR, VENTURA, CA 93001

PUBLIC WORKS DEPARTMENT ENGINEERING DIVISION
CITY OF SAN BUENAVENTURA

PRINCIPAL ENGINEER — DATE: 5 May 2026

CITY ENGINEER — DATE: 5/7/2026

ARCHITECT OF RECORD

MFR. STRUCTURAL ENGINEER OF RECORD

MFR. PROJECT SPECIFIC PROFESSIONAL OF RECORD

SHEET TITLE:
MECHANICAL PLAN
WALL MOUNT

REVISIONS
1 -
1 -
1 -
1 -

PROJECT NO.:	00-0000
DRAWN BY:	00
SCALE:	AS NOTED
DATE:	00-00-00

SHEET NUMBER
M1.3

SPEC NO. 2025-010 DWG. NO. 2025-D-010

LIGHTING LEGEND & SYMBOLS

SYMBOL	DESCRIPTION
	2'x4' LED LOW PROFILE RECESSED TROFFER LIGHT FIXTURE WITH INTEGRAL EMERGENCY BATTERY WITH 90MIN BATTERY BACK UP PACK PS1055LCP. LITHONIA #2GTL4 4400LM LP840 4000K 120V, 34.1W, 0–10V DIMMING DRIVER SUITABLE FOR DAMP LOCATION
	2'x4' LED LOW PROFILE RECESSED TROFFER LIGHT FIXTURE LITHONIA #2GTL4 4400LM LP840 4000K 120V, 34.1W, 0–10V DIMMING DRIVER SUITABLE FOR DAMP LOCATION
	10"x48" LED LOW PROFILE CURVED BASKET WRAPAROUND SURFACE MOUNT LIGHT FIXTURE LITHONIA #LBL4 LP840 4000LM 5000K 120V, 32W, EL7L 700 NOMINAL LUMEN BATTERY PACK
	10"x48" LED LOW PROFILE CURVED BASKET WRAPAROUND SURFACE MOUNT LIGHT FIXTURE LITHONIA #LBL4 LP840 4000LM 5000K 120V, 32W
	2'x2' LED LOW PROFILE RECESSED TROFFER LIGHT FIXTURE WITH INTEGRAL EMERGENCY BATTERY WITH 90MIN BATTERY BACK UP PACK PS1055LCP LITHONIA #2GTL2 3300LM LP840 4000K 120V, 32.3W, 0–10V DIMMING DRIVER
	2'x2' LED LOW PROFILE RECESSED TROFFER LIGHT FIXTURE LITHONIA #2GTL2 3300LM LP840 4000K 120V, 32.3W, 0–10V DIMMING DRIVER
	2'x4' LED RECESSED WET LOCATION TROFFER LIGHT FIXTURE LITHONIA #WRTL F L48 5000LM OAW AFL MVOLT GZ1 40K 80CRI PS1050 EMERGENCY BATTERY PACK WH 120V, 38.7W, 53 LBS, WHEN HATCHED REPRESENTS BATTERY BACKUP UNIT.
	1'x4' LED RECESSED WET LOCATION TROFFER LIGHT FIXTURE LITHONIA #WRTL F L48 5000LM OAW AFL MVOLT GZ1 40K 80CRI PS1050 EMERGENCY BATTERY PACK WH 120V, 44W, 36 LBS, WHEN HATCHED REPRESENTS BATTERY BACKUP UNIT.
	2'x2' LED RECESSED WET LOCATION TROFFER LIGHT FIXTURE LITHONIA #WRTL F L48 5000LM OAW AFL MVOLT GZ1 40K 80CRI PS1050 EMERGENCY BATTERY PACK WH 120V, 38.7W, 36 LBS, WHEN HATCHED REPRESENTS BATTERY BACKUP UNIT.
	RECESSED DOWN LIGHT RECESSED TROFFER LIGHT FIXTURE 120V, 10W, DIMMABLE DOWN TO 10% OF FULL LIGHT
	AC ELECTRONICS AC106 37W 120/277V EXTERIOR WALL MOUNT LED WALLPACK FIXTURE WITH 90 MIN EMERGENCY BACK UP PS1055LCP
	SURFACE MOUNTED CEILING DOUBLE FACE EXIT SIGN (UNIVERSAL ARROWS INDICATED AS NEEDED)
	SURFACE MOUNTED CEILING SINGLE FACE EXIT SIGN (UNIVERSAL ARROWS INDICATED AS NEEDED)
EXIT	EXIT WITH 90 MIN BATTERY BACKUP LITHONIA LHQM–LED–R–HO RO 4.3 WATTS UL DAMP LOCATION LISTED +6" ABOVE FLOOR (AS APPLICABLE/ SECT. 1013.7)
EXIT	EXIT/ EMERGENCY WITH 90 MIN BATTERY BACKUP LITHONIA LHQM–LED–R–HO 4.3 WATTS UL DAMP LOCATION LISTED
	LITHONIA QUANTUM LED EMERGENCY LIGHT ELM2LF–FIXED OPTICS 4.8W. ADD WPVS ACCESORY FOR DAMP LOCATION

POWER LEGEND & SYMBOLS

SYMBOL	DESCRIPTION
$	DUPLEX RECEPTACLE–SPLIT WIRED,SWITCHED +15" AFF BOT OF BOX (U.N.O.)
$	QUADPLEX RECEPTACLE–SPLIT WIRED,SWITCHED +15" AFF BOT OF BOX (U.N.O.)
C	DUPLEX RECEPTACLE CELING MOUNTED
DED	DEDICATED DUPLEX RECEPTACLE +15" AFF BOT OF BOX (U.N.O.)
	DUPLEX RECEPTACLE +15" AFF BOT OF BOX (U.N.O.) R=RECESSED
	DUPLEX FLOOR RECEPTACLE OUTLET
	QUAD–PLEX RECEPTACLE +15" AFF BOT OF BOX (U.N.O.)
	QUAD–PLEX FLOOR RECEPTACLE OUTLET
GFCI	DUPLEX RECEPTACLE/ GFCI +15" AFF BOT OF BOX (U.N.O.)
	SINGLE CLOCK RECEPT +8'–0"
	EXHAUST FAN, 100 CFM (156 WATTS) MIN FOR SINGLE OCCUPANT
	EXHAUST FAN, 350 CFM (180 WATTS) MIN FOR MULTIPLE OCCUPANTS
$*	TAMPER–RESISTANT KEY TOGGLE SWITCH LEVITON M1221–L
$°	DECORA SINGLE SWITCH +48" AFF TOP OF BOX (U.N.O.)
$3	DECORA 3–WAY SWITCH +48" AFF TOP OF BOX (U.N.O.) LEVITON 5623–2W 120/277V
$4	DECORA 4–WAY SWITCH +48" AFF TOP OF BOX (U.N.O.)
DIM2 $	OCCUPANCY SENSOR DIMMER SWITCH LEVITON OSD10–I0W +48" AFF TOP OF BOX (U.N.O.)
DIM $	DIMMER SWITCH +48" AFF TOP OF BOX (U.N.O.) LEVITON DS710–10Z 120/277V
occ1 $	DECORA WALL SWITCH MULTI–TECHNOLOGY OCCUPANCY SENSOR LEVITON OSSMT 3X3 OSSMT–GDW
occ2 $	DECORA WALL SWITCH MULTI–TECHNOLOGY OCCUPANCY SENSOR LEVITON OSSMD
PP1	LEVITON POWER PACK OPP20–D2 120/230/277V
PP2	LEVITON POWER PACK OPP20–RD4 120/230/277V
TC	TIME CLOCK (EXTERIOR LIGHTS) +48" AFF TOP OF BOX (U.N.O.)
PC	PHOTO CONTROL SENSOR LEVITON ODCOP–DOW
OS	OCCUPANCY SENSOR CEILING MOUNTED (LIGHTING) ☐LEVITON OSC10–M0W ☐ LEVITON OSC20–M0W
OS	OCCUPANCY SENSOR (LIGHTING) WALL MOUNTED +48" AFF TOP OF BOX (U.N.O.) LEVITON ODS15–IDW
F	DISCONNECT SWITCH H.P. RATED 600 VOLTS RATED 'F' INDICATES FUSE TYPE. FUSES PER APPROVED MANUFACTURES DRAWINGS.
	PULL STATION J–BOX W/ 3/4"ø CONDUIT. INSTALL PER MOUNTING HEIGHT DETAIL U.N.O.
	EXT. HORN J–BOX W/ 3/4"Ø CONDUIT AT +90" A.F.F.
	SINGLE PLEX RECEPTACLE OUTLET (20 AMPS, 125 VOLTS). INSTALL PER MOUNTING HEIGHT DETAIL U.N.O.
WP	WEATHERPROOF DUPLEX RECEPTACLE OUTLET (20 AMPS, 125 VOLTS). INSTALL PER MOUNTING HEIGHT DETAIL.
	RECESSED CEILING MOUNTED DUPLEX RECEPTACLE OUTLET, CONVENIENCE (20 AMPS, 125 VOLTS)
	HORN/STROBE LIGHT + 80" AFF
S	SMOKE DETECTOR @ CEILING
H	HEAT DETECTOR IN ATTIC SPACE
J	WATER PROOF JUNCTION BOX WITH COVER
J	JUNCTION BOX
M	OCCUPANCY MOTION SENSOR, FLUSH CEILING MOUNTED ☐LEVITON OSC10–M0W ☐ LEVITON OSC20–M0W
	BRANCH PANEL BOARD, WALL MOUNTED, SEE PLANS AND SCHEDULE (SURFACE MOUNTED)
	BRANCH PANEL BOARD, WALL MOUNTED, SEE PLANS AND SCHEDULE (RECESSED MOUNTED)
	MANUAL DIMMING WITH COMBINED BUILT–IN OCCUPANCY SENSOR: LUTRON 'MAESTRO' MS–Z101. THIS IS SWITCH IS APPLICABLE FOR DIMMING LED BULB, CFL BULB, INCANDESCENT AND DIMMABLE FLUORESCENT BALLAST WITH MAX 20 FT RANGE FROM WALL. REFER TO CATALOG CUT SHEET FOR ADDITIONAL INFORMATION. INSTALL PER MOUNTING HEIGHT DETAIL UNO
*	DIMMING OCCUPANCY SENSOR: LUTRON 'MAESTRO' MS–Z101. THIS IS SWITCH IS APPLICABLE FOR DIMMING LED BULB, CFL BULB, INCANDESCENT AND DIMMABLE FLUORESCENT BALLAST. REFER TO CATALOG CUT SHEET FOR ADDITIONAL INFORMATION. INSTALL PER MOUNTING HEIGHT DETAIL UNO

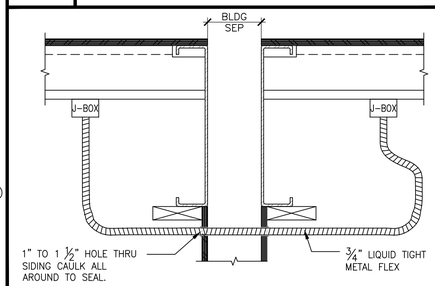

CONDUIT CONNECTION AT BLDG SEPARATION

SCALE: 1 1/2"=1'–0"

5

LOW VOLTAGE LEGEND & SYMBOLS

SYMBOL	DESCRIPTION
J	JUNCTION BOX
S	OUTDOOR WEATHER PROOF SPEAKER
	FLOOR DATA BOX W/ POWER OUTLET
TV	TV OUTLET. INSTALL PER MOUNTING HEIGHT DETAIL U.N.O.
IC	INTERCOM OUTLET. INSTALL PER MOUNTING HEIGHT DETAIL U.N.O.
	SECURITY SYSTEM DOOR SWITCH, MOUNTED AT TOP OF DOOR JAMB
SP	CEILING MOUNTED SPEAKER
	HOME RUN TO DESTINATION AS INDICATED. REFER TO CONDUIT SYMBOL ABOVE
	FLOOR DATA BOX
	DATA OUTLET +15" AFF BOT OF BOX (U.N.O.)
	WALL PHONE OUTLET +48 TOP OF BOX (U.N.O.)
	DATA/VOICE OUTLET +15" AFF BOT OF BOX (U.N.O.)
	CEILING MOUNTED DATA BOX
	NOTE: SEE DETAIL 2 FOR MOUNTING HEIGHTS

FIRE ALARM NOTES

1. FIRE ALARM SYSTEM SHALL COMPLY WITH CBC CHAPTER 9 SECTION 907.2.3 & TITLE 24, PART 3, ARTICLE 760 OF THE CALIFORNIA ELECTRICAL CODE,
2. INSTALLATION OF FIRE ALARM SYSTEM SHALL NOT BE STARTED UNTIL DETAIL PLANS, SPECIFICATIONS AND ENGINEERING CALCULATIONS HAVE BEEN ACCEPTED AND SIGNED BY THE ARCHITECT OR STRUCTURAL ENGINEER IN GENERAL CHARGE OF DESIGN. THE SIGNATURE OF THE ARCHITECT OR PROFESSIONAL ENGINEER WHO HAS BEEN DELEGATED RESPONSIBILITY COVERING THE WORK SHOWN ON A PARTICULAR PLAN OR SPECIFICATION, MUST BE APPROVED BY THE DIVISION OF THE STATE ARCHITECT AND STATE FIRE MARSHALL, PER CFC SECTION 907.1.2 & DSA GUIDELINES GL–2
3. A DEDICATED BRANCH CIRCUIT SHALL BE PROVIDED FOR FIRE ALARM EQUIPMENT. THIS CIRCUIT SHALL BE ENERGIZED FROM THE COMMON USE AREA PANEL AND SHALL HAVE NO OTHER OUTLETS. THE BREAKER SHALL HAVE A "RED" LOCKING DEVICE TO BLOCK THE HANDLE IN THE "ON" POSITION. THE CIRCUIT BREAKER SHALL BE LABELED "FIRE ALARM CIRCUIT CONTROL". CIRCUIT ID TO BE LABELED AT THE FIRE PANEL/EXTENDERS, NFPA 72 SECTION 10.6.5.2, 10.6.5.2.2, 10.6.5.2.3, 10.6.5.2.4 & 10.6.5.4
4. UPON COMPLETION OF THE INSTALLATION OF THE PROTECTIVE SIGNALING EQUIPMENT, A SATISFACTORY TEST OF THE ENTIRE SYSTEM SHALL BE MADE IN THE PRESENCE OF THE ENFORCING FIRE AGENCY.
5. ALARMS, SECTION 907, CALIFORNIA FIRE CODE. IF EMERGENCY WARNING SYSTEMS ARE REQUIRED, THEY SHALL ACTIVATE A MEANS OF WARNING THE HEARING IMPAIRED. FLASHING VISUAL WARNING SHALL HAVE A FREQUENCY OF NOT MORE THAN 60 FLASHES PER MINUTE. LOCATE PER CFC 907.5.2.3 & NFPA 72
6. EMERGENCY VOICE COMMUNICATION PER CBC 907.2.3

GENERAL NOTES

1. ALL FIRE ALARM SHOULD BE HOMERUN TO SINGLE POINT OF CONNECTION W/ 3/4" CO (UNO)
2. ALL LOW VOLTAGE CONDUIT RUNS ARE STUBBED FROM OUTLET BOX TO ATTIC SPACE (UNO). USE 1"ø CO FOR ALL OUTLET STUBS (UNO)
3. ALL WIRING & DEVICES FOR LOW VOLTAGE SYSTEMS INCLUDING BUT NOT LIMITED TO FIRE ALARM SYSTEMS ARE BY OTHERS
4. VERIFY ALL FIRE ALARM DEVICE LOCATION W/ AOR'S ELECTRICAL DWG'S FOR PROJECT SPECIFIC DESIGN
5. DRAWINGS ARE DIAGRAMMATIC AND INDICATE GENERAL ARRANGEMENT OF SYSTEMS AND SCOPE OF WORK. MAINTAIN HEADROOM AND MINIMUM CODE REQUIRED WORKING CLEARANCES AT ALL TIMES
6. CONTRACTOR SHALL COORDINATE THE LOCATION OF ALL WALL OUTLET BOXES FOR SWITCHES, BELL/STROBES, FIRE ALARM PULL STATIONS, RECEPTACLES ETC WITH CABINETS, FURNITURE, EQUIPMENT ETC, TO AVOID CONFLICT
7. SEE MECHANICAL AND PLUMBING DRAWINGS AND SPECIFICATION FOR ADDITIONAL CONNECTION REQUIREMENTS TO CONTROL PANELS, CONTROL TRANSFORMERS, POWER FOR CONTROL SYSTEM EP AND PE SWITCHES, TIME CLOCKS, VALVES, T–STATS, RELAYS, DUCT SMOKE DETECTOR LOCATIONS, ETC. INDICATED ON CONTROL WIRING DIAGRAMS. ELECTRICAL CONTRACTOR SHALL VERIFY FINAL CONTROL WIRING REQUIREMENTS PRIOR TO ANY WORK AND PROVIDE ALL NECESSARY DEVICES AND CONNECTIONS AS REQUIRED
8. ALL EXTERIOR ELECTRICAL DEVICES AND EQUIPMENT INCLUDING THOSE THAT ARE EXPOSED TO OUTSIDE ENVIRONMENT (UP TO 16') SHALL BE WEATHERPROOF TYPE, NEMA 3R
9. ALL ELECTRICAL POWER, LIGHTING, TELEPHONE OR SIGNAL WIRING IN FIRE RATED WALL IS TO BE INSTALLED IN A METALLIC CONDUIT SYSTEM
10. ALL ELECTRIC MATERIAL SHALL BE LISTED BY "UL" FOR THE TYPE OF APPLICATION AND "UL" LABEL SHALL APPEAR ON ALL ELECTRICAL EQUIPMENT.
11. ALL DISTRIBUTION AND CONTROL EQUIPMENT (SUCH AS CB's, SWITCHES, CONTRACTORS, ETC), TERMINATIONS SHALL BE FULLY RATED PER UL AS FOLLOWS:
    a. 125A OR LESS : 60°C OR MORE
    b. MORE THAN 125A : 75°C OR MORE
12. REFER TO ENERGY CODE TABLE 140.6–A FOR LIGHTING CONTROL TYPES
13. UPON SITE PLACEMENT OR SITE CONSTRUCTION. THE OPERATION AND MAINTENANCE DOCUMENTATION FOR ALL MECHANICAL AND LIGHTING SYSTEMS AND CONTROLS SHALL BE PROVIDED BY THE MODULAR BUILDING MANUFACTURER, OR THE GENERAL CONTRACTOR FOR THE PERMANENT MODULAR RELOCATABLE BUILDING AND DELIVERED TO THE OWNER.
14. ACCEPTANCE TESTS BE COMPLETED ON NEWLY INSTALLED OR REPLACEMENT OF LIGHTING CONTROLS BEFORE PROJECT COMPLETION PER THE CALIFORNIA ENERGY CODE SECTION 10–103. ACCEPTANCE TESTS MUST BE PERFORMED BY A CERTIFIED ACCEPTANCE TEST TECHNICIAN (ATT). THE ACCEPTANCE TESTING PROCEDURES MUST BE REPEATED, AND DEFICIENCIES CORRECTED UNTIL THE INSTALLATION OF THE SPECIFIED SYSTEMS CONFORM AND PASS THE REQUIRED ACCEPTANCE CRITERIA. COMPLETED NRCA FORMS SHALL BE SUBMITTED TO THE PROJECT INSPECTOR AND THE DISTRICT.A

* FOR EACH PROJECT SPECIFIC, VERIFY IF DIMMABLE BALLAST ARE APPLICABLE PER THE USE OF LIGHT FOR EACH OCCUPANCY OR ROOM. SWITCH SHALL REQUIRE A DIMMING FEATURE

NOTES

MEP COMPONENT ANCHORAGE NOTE

ALL MECHANICAL, PLUMBING, AND ELECTRICAL COMPONENTS SHALL BE ANCHORED AND INSTALLED PER THE DETAILS ON THE DSA APPROVED CONSTRUCTION DOCUMENTS. THE FOLLOWING COMPONENTS SHALL BE ANCHORED OR BRACED TO MEET THE FORCE AND DISPLACEMENT REQUIREMENTS PRESCRIBED IN THE 2022 CBC, SECTIONS 1617A.1.18 THRU 1617A.1.26 AND ASCE 7–16 CHAPTERS 13, 26 AND 30.

1. ALL PERMANENT EQUIPMENT AND COMPONENTS.
2. TEMPORARY, MOVABLE OR MOBILE EQUIPMENT THAT IS PERMANENTLY ATTACHED (E.G. HARD WIRED) TO THE BUILDING UTILITY SERVICES SUCH AS ELECTRICITY, GAS OR WATER. "PERMANENTLY ATTACHED" SHALL INCLUDE ALL ELECTRICAL CONNECTIONS EXCEPT PLUGS FOR 110/220 VOLT RECEPTACLES HAVING A FLEXIBLE CABLE
3. TEMPORARY, MOVABLE OR MOBILE EQUIPMENT WHICH IS HEAVIER THAT 400 POUNDS OR HAS A CENTER OF MASS LOCATED 4 FEET OR MORE ABOVE THE ADJACENT FLOOR OR ROOF LEVEL THAT DIRECTLY SUPPORTS THE COMPONENT IS REQUIRED TO BE RESTRAINED IN A MANER APPROVED BY DSA.

THE FOLLOWING MECHANICAL AND ELECTRICAL COMPONENTS SHALL BE POSITIVELY ATTACHED TO THE STRUCTURE BUT NEED NOT DEMONSTRATE DESIGN COMPLIANCE WITH THE REFERENCES NOTED ABOVE. THESE COMPONENTS SHALL HAVE FLEXIBLE CONNECTIONS PROVIDED BETWEEN THE COMPONENT AND ASSOCIATED DUCTWORK, PIPING, AND CONDUIT. FLEXIBLE CONNECTIONS MUST ALLOW MOVEMENT IN BOTH TRANSVERSE AND LONGITUDINAL DIRECTIONS:

A. COMPONENTS WEIGHING LESS THAN 400 POUNDS AND HAVE A CENTER OF MASS LOCATED 4 FEET OR LESS ABOVE THE ADJACENT FLOOR OR ROOF LEVEL THAT DIRECTLY SUPPORT THE COMPONENT.

B. COMPONENTS WEIGHING LESS THAN 20 POUNDS, OR IN THE CASE OF DISTRIBUTED SYSTEMS, LESS THAN 5 POUNDS PER FOOT, WHICH ARE SUSPENDED FROM A ROOF OR FLOOR OR HUNG FROM A WALL.

THE ANCHORAGE OF ALL MECHANICAL, ELECTRICAL AND PLUMBING COMPONENTS SHALL BE SUBJECT TO THE APPROVAL OF THE DESIGN PROFESSIONAL IN GENERAL RESPONSIBLE CHARGE OR STRUCTURAL ENGINEER DELEGATED RESPONSIBILITY AND ACCEPTANCE BY DSA. THE PROJECT INSPECTOR WILL VERIFY THAT ALL COMPONENTS AND EQUIPMENT HAVE BEEN ANCHORED IN ACCORDANCE THE ABOVE REQUIREMENTS.

PIPING, DUCTWORK AND ELECTRICAL DISTRIBUTION SYSTEM BRACING NOTE

PIPING, DUCTWORK, AND ELECTRICAL DISTRIBUTION SYSTEMS SHALL BE BRACED TO COMPLY WITH THE FORCES AND DISPLACEMENTS PRESCRIBED IN ASCE 7–16 SECTION 13.3 AS DEFINED IN ASCE 7–16 SECTION 13.6.5, 13.6.6, 13.6.7, 13.6.8, AND 2022 CBC, SECTIONS 1617A.1.24, 1617A.1.25 AND 1617A.1.26.

THE METHOD OF SHOWING BRACING AND ATTACHAMENTS TO THE STRUCTURE FOR THE IDENTIFIED DISTRIBUTION SYSTEM ARE AS NOTED TO THE RIGHT. WHEN BRACING AND ATTACHMENTS ARE BASED ON A PREAPPROVED INSTALLATION GUIDE (E.G. OSHPD OPM FOR 2013 CBC OR LATER), COPIES OF THE BRACING SYSTEM INSTALLATION GUIDE OR MANUAL SHALL BE AVAILABLE ON THE JOBSITE PRIOR TO THE START OF AND DURING THE HANGING AND BRACING OF THE DISTRIBUTION SYSTEMS. THE STRUCTURAL ENGINEER OF RECORD SHALL VERIFY THE ADEQUACY OF THE STRUCTURE TO SUPPORT THE HANGER AND BRACE LOADS.

MECHANICAL PIPING (MP), MECHANICAL DUCTS (MD), PLUMBING PIPING (PP), ELECTRICAL DISTRIBUTION SYSTEMS (E):

MP☐ MD☐ PP☐ E■– OPTION 1: DETAILED ON THE APPROVED DRAWINGS WITH PROJECT SPECIFIC NOTES AND DETAILS

MP☐ MD☐ PP☐ E☐– OPTION 2: SHALL COMPLY WITH THE APPLICABLE OSHPD PRE–APPROVAL (OPM #) #_____.

LOW VOLTAGE LEGEND & SYMBOLS

CAM	J BOX FOR CAMERA W/SINGLE DEVICE COVER W/ BLANK PLATE 4SQ BOX W/3/4" CONDUIT TO ATTIC W/PULLSTRING
4	CAT6E CABLE WALL BOX & PLATE WITH RJ45 JACK–(4) PORTS
2	CAT6E CABLE WALL BOX & PLATE WITH RJ45 JACK–(2) PORTS
	IT EQUIPMENT & TELECOM CENTER,USDD ATX & FIRE ALARM PANEL
WAP	CAT6E CABLE AND RJ45 PLUG FOR CEILING MOUNTED WIRELESS ACCESS POINT
RR2 CIR	ROOM REMOTE/COLOR REMOTE (USDD)
MSS	MESSAGE SIGN BOARD (USDD)
TVR	HDTV REMOTE (USDD)
PB RED / PB BLACK	BELL (USDD)
S	LED ALERTING SPEAKER (USDD DISPATCH ALERTING)

LIGHTING CONTROL SYSTEM SEQUENCE OF OPERATIONS

THE LIGHTING CONTROL SYSTEM BASIS OF DESIGN SHALL BE THE LUTRON VIVE WIRELESS LIGHTING CONTROL SYSTEM. THE SYSTEM SHALL BE CAPABLE OF PROVIDING MANUAL CONTROL, OCCUPANCY SENSING CONTROL AND DAYLIGHT HARVESTING CONTROL.

SEQUENCE:

OCCUPANT ENTERS:
ALL LIGHTS AUTOMATICALLY TURN ON TO 50% LIGHT LEVEL. OCCUPANT MAY INCREASE LIGHTS TO MAXIMUM LEVEL MANUALLY WITH WALL CONTROL.

WHEN OCCUPIED:
LIGHTING IN DAYLIT ZONES AUTOMATICALLY DIM/BRIGHTEN BASED ON DAYLIGHT AVAILABILITY.
OCCUPANT MAY MANUALLY DIM/BRIGHTEN THE LIGHTS WITH WALL CONTROL.

OCCUPANT EXITS:
ALL LIGHTS AUTOMATICALLY TURN OFF 15 MINUTES AFTER VACANCY.

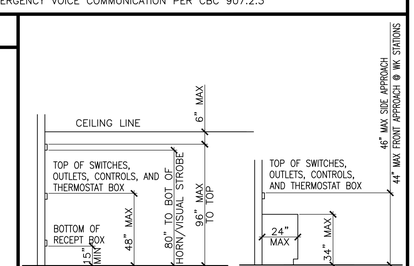

MOUNTING HEIGHT DETAIL

2

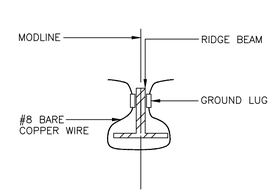

MODULE BONDING

3

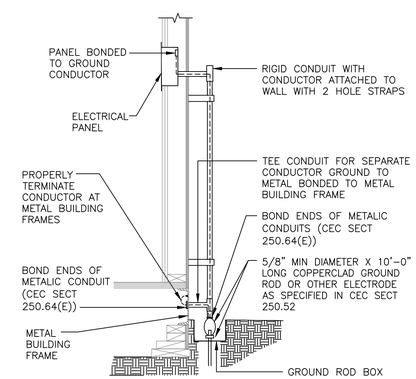

(REFER TO CEC SECTION 250 FOR THE ITEMS BELOW AND DSA IR E–1)

NOTES:

1. SIZE OF CONDUCTORS SHALL COMPLY WITH CEC TABLE 250.66
2. BOND SEPARATE CONDUCTORS FROM GROUND ROD TO ELECTRICAL PANEL AND TO METAL BUILDING FRAME (CEC 250.52). IN ADDITION TO THE DETAIL SHOWN ABOVE, BOND THE ELECTRICAL GROUND TO METAL UNDERGROUND WATER PIPE IN DIRECT CONTACT WITH THE EARTH FOR 10 FT OR MORE, IF AVAILABLE (CEC 250.52), EXCEPT FIRE SPRINKLER SYSTEM PIPING.
3. ALL MODULES OF METAL FRAME BUILDINGS SHALL BE ELECTRICALLY BONDED TOGETHER. (BOLTING ONLY IS NOT ACCEPTABLE BONDING).
4. CHECK RESISTANCE TO GROUND. IF RESISTANCE EXCEEDS 25 OHMS, INSTALL ADDITIONAL GROUND ROD GREATER THAN SIX FEET AWAY (CEC 250.53 (A) & (B). ONCE THE SECOND GROUND ROD IS INSTALLED, ADDITIONAL GROUND RESISTANCE TESTING IS NOT REQUIRED.
5. WHERE MODULAR BUILDING ARE GROUPED TOGETHER, A GROUND ROD MAY BE INSTALLED AT THE END BUILDINGS AND A GROUND RING MAY BE INSTALLED BETWEEN THEM. EACH INTERMEDIATE MODULAR BUILDING MAY BE BONDED TO THAT GROUND RING. WHERE THIS METHOD IS USED, GROUND RESISTANCE TESTING SHALL NOT BE REQUIRED
6. WHERE MODULAR BUILDINGS ARE INSTALLED ON CONCRETE FOUNDATIONS, A UFER GROUND SHALL BE INSTALLED IN THE FOOTING PER [CEC 250.52 (A) (3)]
7. OTHER GROUNDING METHODS IDENTIFIED IN CEC 250 SHALL BE ACCEPTABLE MEANS TO ACHIEVE ADEQUATE GROUNDING OF METAL BUILDINGS IN COMPLIANCE WITH THE ABOVE

ACCEPTABLE GROUNDING DETAIL

NOT BY BUILDING MANUFACTURER

1

PROJECT SPECIFIC STATE AGENCY APPROVAL

GLOBAL MODULAR incorporated

AURORA DESIGNS · MODTECH Designs · MODULAR STRUCTURES INTERNATIONAL, INC. DESIGNS

CONTRACTORS LICENSE #837357

NORTHERN CALIFORNIA DIVISON
450 COMMERCE AVE
ATWATER, CA 95301
PHONE: (209) 676–8029
FAX: (209) 676–8067
WEBSITE: WWW.GDVI.NET

SOUTHERN CALIFORNIA DIVISON
1860 CHICAGO AVE., SUITE I–7
RIVERSIDE, CA 92507
PHONE: (951) 686–3633
FAX: (951) 686–3666
WEBSITE: WWW.GDVI.NET

THIS DRAWING AND THE MATERIAL CONTAINED THERE-IN ARE THE PROPERTY OF GLOBAL MODULAR, INC. AND SHALL NOT BE REPRODUCED, COPIED OR OTHERWISE DISPOSED OF DIRECTLY OR INDIRECTLY AND SHALL NOT BE USED IN WHOLE OR IN PART TO ASSIST IN THE MAKING OF OR FOR THE PURPOSE OF FURNISHING ANY INFORMATION FOR THE MAKING OF DRAWINGS, PRINTS APPARATUS OR PARTS THEREOF WITHOUT THE FULL KNOWLEDGE AND WRITTEN CONSENT OF GLOBAL MODULAR, INC. ALL PATENTABLE MATERIAL CONTAINED HEREIN AND ORIGINATING WITH GLOBAL MODULAR, INC. SHALL BE THE PROPERTY OF GLOBAL MODULAR, INC.

PROJECT NAME:

SHEET TITLE:

ELECTRICAL DETAILS

PUBLIC WORKS DEPARTMENT ENGINEERING DIVISION

CITY OF SAN BUENAVENTURA

PRINCIPAL ENGINEER — DATE: 5 May 2026

CITY ENGINEER — DATE: 5/7/2026

PRE-CHECK (PC) DOCUMENT
CODE: 2022 CBC

A SEPARATE PROJECT APPLICATION FOR CONSTRUCTION IS REQUIRED

MFR. STRUCTURAL ENGINEER OF RECORD ON PC

MFR. PROJECT SPECIFIC PROFESSIONAL OF RECORD

ARCHITECT OF RECORD

REVISIONS
1 -
2 -
3 -
4 -

PROJECT NO.:	00-0000
DRAWN BY:	00
SCALE:	AS NOTED
DATE:	00-00-00

SHEET NUMBER

E0.0

SPEC NO. 2025-010 DWG. NO. 2025-D-010

FOR REFERENCE ONLY

PANEL SCHEDULE

PANEL A
MAIN BREAKER 200A

Rated Amps: 200 A | Interior: | Exterior: X | NEMA Rated: NEMA 3R
Volts: 120/208 | Phase / Wire: 3 PHASE/4 WIRE | Flush: | Surface: X

Description	Load	Ckt Bkr			Ckt Bkr	Load	Description
			1	2	2	5000	RANGE/OVEN
			3	4	50	5000	RANGE/OVEN
			5	6	1/20	300	HOOD/FAN
			7	8	1/20	360	RECEPT for TV
RECEPTS	1260	1/20	9	10	1/20	780	REFRIGERATOR
RECEPTS	900	1/20	11	12	1/20	780	REFRIGERATOR
RECEPTS	900	1/20	13	14	1/20	780	REFRIGERATOR
RECEPTS	1080	1/20	15	16	1/20	840	DISPOSER
RECEPTS	1440	1/20	17	18			
			19	20			
			21	22	1/20	180	FIRE ALARM
			23	24	1/20	2200	DISHWASHER

15,360 Watts + 17,460 Watts + 13,940 Watts + 11,690 25% Watts ÷ 360 Voltage = 162 A Amps Per Phase

PANEL B
MAIN BREAKER 125A

Rated Amps: 125A | Interior: | Exterior: X | NEMA Rated: NEMA 3R
Volts: 120/208 | Phase / Wire: 3 PHASE/4 WIRE | Flush: | Surface: X

Description	Load	Ckt Bkr			Ckt Bkr	Load	Description
			1	2	1/20	540	EXT. RECEPT/GFCI/WP
			3	4			
			5	6	1/20	360	RECEPT for TV
RECEPT	900	1/20	7	8			
RECEPT	900	1/20	9	10			
RECEPT	900	1/20	11	12			
			13	14			
INT/EXT/EXIT LIGHTS EXH FAN	766	1/20	15	16			
			17	18			
			19	20			
			21	22			
			23	24			

1,440 Watts + 1,666 Watts + 1,260 Watts + 1,092 25% Watts ÷ 360 Voltage = 15 A Amps Per Phase

PANEL C
MAIN BREAKER 125A

Rated Amps: 125A | Interior: | Exterior: X | NEMA Rated: NEMA 3R
Volts: 120/208 | Phase / Wire: 3 PHASE/4 WIRE | Flush: | Surface: X

Description	Load	Ckt Bkr			Ckt Bkr	Load	Description
			1	2	1/20	1440	WASHER
			3	4	2	2375	DRYER
			5	6	30	2375	DRYER
RECEPT	900	1/20	7	8	1/20	1100	INT/EXT/EXIT LIGHTS EXH FAN
RECEPT	540	1/20	9	10			
RECEPT	000	1/20	11	12	1/20	142	RECEPT for TV
			13	14			
			15	16			
			17	18			
			19	20			
			21	22			
			23	24			

11,940 Watts + 11,955 Watts + 10,837 Watts + 8,683 25% Watts ÷ 360 Voltage = 121 A Amps Per Phase

PANEL D
MAIN BREAKER 125A

Rated Amps: 125A | Interior: | Exterior: X | NEMA Rated: NEMA 3R
Volts: 120/208 | Phase / Wire: 3 PHASE/4 WIRE | Flush: | Surface: X

Description	Load	Ckt Bkr			Ckt Bkr	Load	Description
			1	2	1/20	720	RECEPT
			3	4	1/20	720	RECEPT
			5	6			
RECEPT	900	1/20	7	8	1/20	540	RECEPT
RECEPT	720	1/20	9	10			
RECEPTS/GFCI	900	1/20	11	12			
			13	14			
			15	16			
			17	18			
			19	20			
			21	22			
			23	24			

10,480 Watts + 9,760 Watts + 9,220 Watts + 7,365 25% Watts ÷ 360 Voltage = 102 A Amps Per Phase

(L) LABEL AND LOCK ON DEVICE

* CIRCUIT BREAKER TO BE IN ACCORDANCE WITH MANUFACTURER'S RECOMMENDATIONS

** DEDICATED CIRCUIT (RED, LOCKING) LABELED PER NFPA 72:10.6.5.2

CAM — J BOX FOR CAMERA W/SINGLE DEVICE COVER W/ BLANK PLATE 4SQ BOX W/3/4" CONDUIT TO ATTIC W/ PULLSTRING

4 — CAT6E CABLE WALL BOX & PLATE WITH RJ45 JACK-(4) PORTS

2 — CAT6E CABLE WALL BOX & PLATE WITH RJ45 JACK-(2) PORTS

IT EQUIPMENT & TELECOM CENTER,USDD ATX & FIRE ALARM PANEL

RR2 CIR — ROOM REMOTE/COLOR REMOTE (USDD)

MSS — MESSAGE SIGN BOARD (USDD)

TVR — HDTV REMOTE (USDD)

PB RED PB BLACK — BELL (USDD)

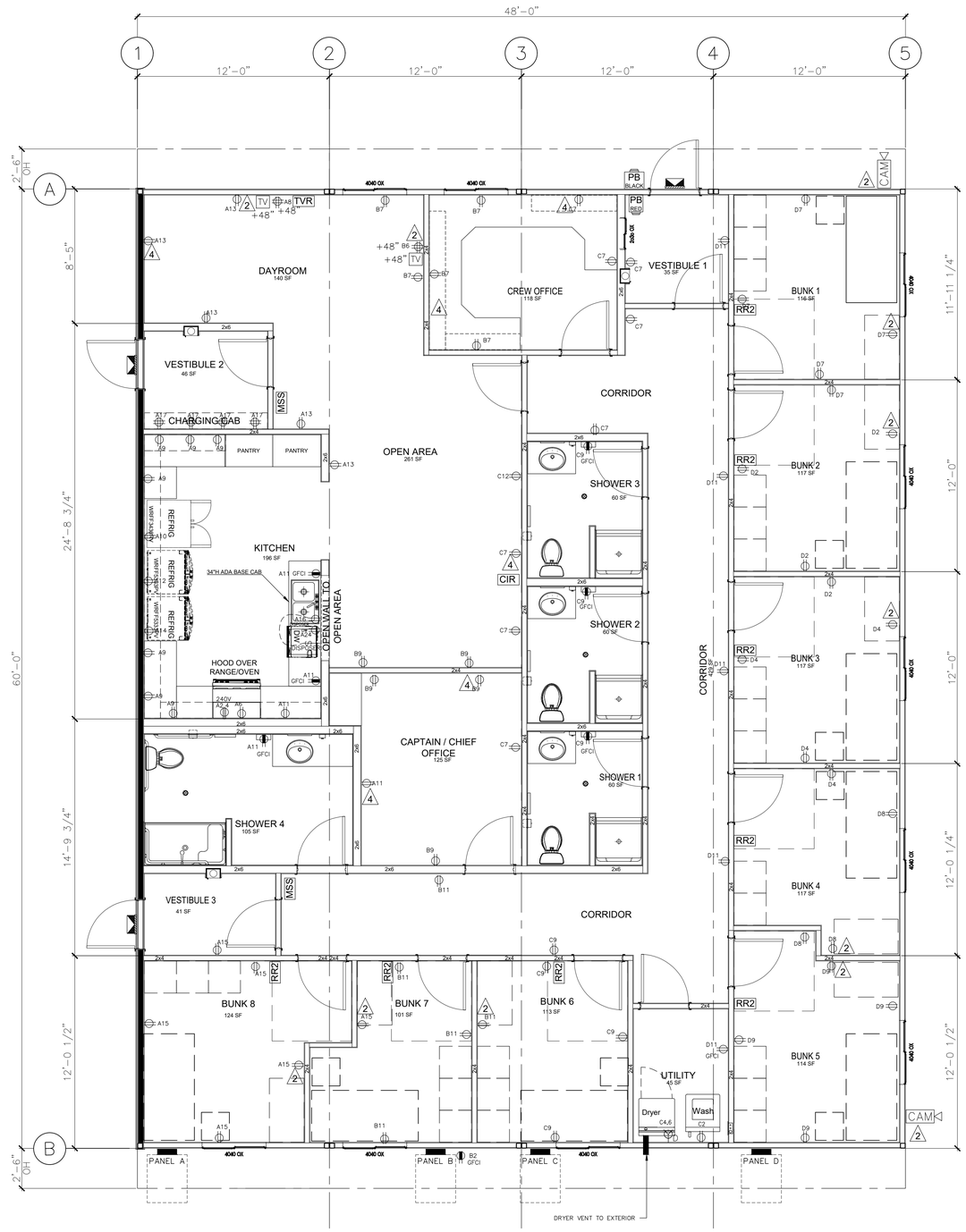

GLOBAL MODULAR incorporated

AURORA DESIGNS | MODTECH Designs | MODULAR STRUCTURES INTERNATIONAL, INC. DESIGN

CONTRACTORS LICENSE #837357

NORTHERN CALIFORNIA DIVISON
450 COMMERCE AVE
ATWATER, CA 95301
PHONE: (209) 676–8029
FAX: (209) 676–8067
WEBSITE: WWW.GDVI.NET

SOUTHERN CALIFORNIA DIVISON
1860 CHICAGO AVE., SUITE I–7
RIVERSIDE, CA 92507
PHONE: (951) 686–3633
FAX: (951) 686–3666
WEBSITE: WWW.GDVI.NET

THIS DRAWING AND THE MATERIAL CONTAINED THERE-IN ARE THE PROPERTY OF GLOBAL MODULAR, INC. AND SHALL NOT BE REPRODUCED, COPED OR OTHERWISE DISPOSED OF DIRECTLY OR INDIRECTLY AND SHALL NOT BE USED IN WHOLE OR IN PART TO ASSIST IN THE MAKING OF OR FOR THE PURPOSE OF FURNISHING ANY INFORMATION FOR THE MAKING OF DRAWINGS, PRINTS APPARATUS OR PARTS THEREOF WITHOUT THE FULL KNOWLEDGE AND WRITTEN CONSENT OF GLOBAL MODULAR, INC. ALL PATENTABLE MATERIAL CONTAINED HEREIN AND ORIGINATING WITH GLOBAL MODULAR, INC, SHALL BE THE PROPERTY OF GLOBAL MODULAR, INC.

PROJECT NAME:

48x60
VENTURA
FIRE DEPARTMENT
2269 ALESSANDRO DR, VENTURA, CA 93001

PUBLIC WORKS DEPARTMENT ENGINEERING DIVISION
CITY OF SAN BUENAVENTURA

PRINCIPAL ENGINEER — DATE: 5 May 2026
CITY ENGINEER — DATE: 5/7/2026
ARCHITECT OF RECORD

MFR. STRUCTURAL ENGINEER OF RECORD

MFR. PROJECT SPECIFIC PROFESSIONAL OF RECORD

SHEET TITLE:
ELECTRICAL PLAN
POWER

REVISIONS
1 -
2 -
3 -
4 -

PROJECT NO.:	00-0000
DRAWN BY:	00
SCALE:	AS NOTED
DATE:	00-00-00

SHEET NUMBER
E1.0
SPEC NO. 2025-010 DWG. NO. 2025-D-010

FOR REFERENCE ONLY

PANEL SCHEDULE

PANEL A
MAIN BREAKER 200A

Rated Amps: 200 A
Interior:
Exterior: X
NEMA Rated: NEMA 3R
Volts: 120/208
Phase / Wire: 3 PHASE/4 WIRE
Flush:
Surface: X

Description	Load	Ckt Bkr			Ckt Bkr	Load	Description
			1	2	2	5000	RANGE/OVEN
			3	4	50	5000	RANGE/OVEN
			5	6	1/20	300	HOOD/FAN
			7	8	1/20	360	RECEPT for TV
RECEPTS	1260	1/20	9	10	1/20	780	REFRIGERATOR
RECEPTS	900	1/20	11	12	1/20	780	REFRIGERATOR
RECEPTS	900	1/20	13	14	1/20	780	REFRIGERATOR
RECEPTS	1080	1/20	15	16	1/20	840	DISPOSER
RECEPTS	1440	1/20	17	18			
			19	20			
			21	22	1/20	180	FIRE ALARM
			23	24	1/20	2200	DISHWASHER

15,360 Watts + 17,460 Watts + 13,940 Watts + 11,690 25% Watts ÷ 360 Voltage = 162 A Amps Per Phase

PANEL B
MAIN BREAKER 125A

Rated Amps: 125A
Interior:
Exterior: X
NEMA Rated: NEMA 3R
Volts: 120/208
Phase / Wire: 3 PHASE/4 WIRE
Flush:
Surface: X

Description	Load	Ckt Bkr			Ckt Bkr	Load	Description
			1	2	1/20	540	EXT. RECEPT/GFCI/WP
			3	4			
			5	6	1/20	360	RECEPT for TV
RECEPT	900	1/20	7	8			
RECEPT	900	1/20	9	10			
RECEPT	900	1/20	11	12			
			13	14			
INT/EXT/EXIT LIGHTS EXH FAN	766	1/20	15	16			
			17	18			
			19	20			
			21	22			
			23	24			

1,440 Watts + 1,666 Watts + 1,260 Watts + 1,092 25% Watts ÷ 360 Voltage = 15 A Amps Per Phase

PANEL C
MAIN BREAKER 125A

Rated Amps: 125A
Interior:
Exterior: X
NEMA Rated: NEMA 3R
Volts: 120/208
Phase / Wire: 3 PHASE/4 WIRE
Flush:
Surface: X

Description	Load	Ckt Bkr			Ckt Bkr	Load	Description
			1	2	1/20	1440	WASHER
			3	4	2	2375	DRYER
			5	6	30	2375	DRYER
RECEPT	900	1/20	7	8	1/20	1100	INT/EXT/EXIT LIGHTS EXH FAN
RECEPT	540	1/20	9	10			
RECEPT	000	1/20	11	12	1/20	142	RECEPT for TV
			13	14			
			15	16			
			17	18			
			19	20			
			21	22			
			23	24			

11,940 Watts + 11,955 Watts + 10,837 Watts + 8,683 25% Watts ÷ 360 Voltage = 121 A Amps Per Phase

PANEL D
MAIN BREAKER 125A

Rated Amps: 125A
Interior:
Exterior: X
NEMA Rated: NEMA 3R
Volts: 120/208
Phase / Wire: 3 PHASE/4 WIRE
Flush:
Surface: X

Description	Load	Ckt Bkr			Ckt Bkr	Load	Description
			1	2	1/20	720	RECEPT
			3	4	1/20	720	RECEPT
			5	6			
RECEPT	900	1/20	7	8	1/20	540	RECEPT
RECEPT	720	1/20	9	10			
RECEPTS/GFCI	900	1/20	11	12			
			13	14			
			15	16			
			17	18			
			19	20			
			21	22			
			23	24			

10,480 Watts + 9,760 Watts + 9,220 Watts + 7,365 25% Watts ÷ 360 Voltage = 102 A Amps Per Phase

(L) LABEL AND LOCK ON DEVICE

* CIRCUIT BREAKER TO BE IN ACCORDANCE WITH MANUFACTURER'S RECOMMENDATIONS

** DEDICATED CIRCUIT (RED, LOCKING) LABELED PER NFPA 72:10.6.5.2

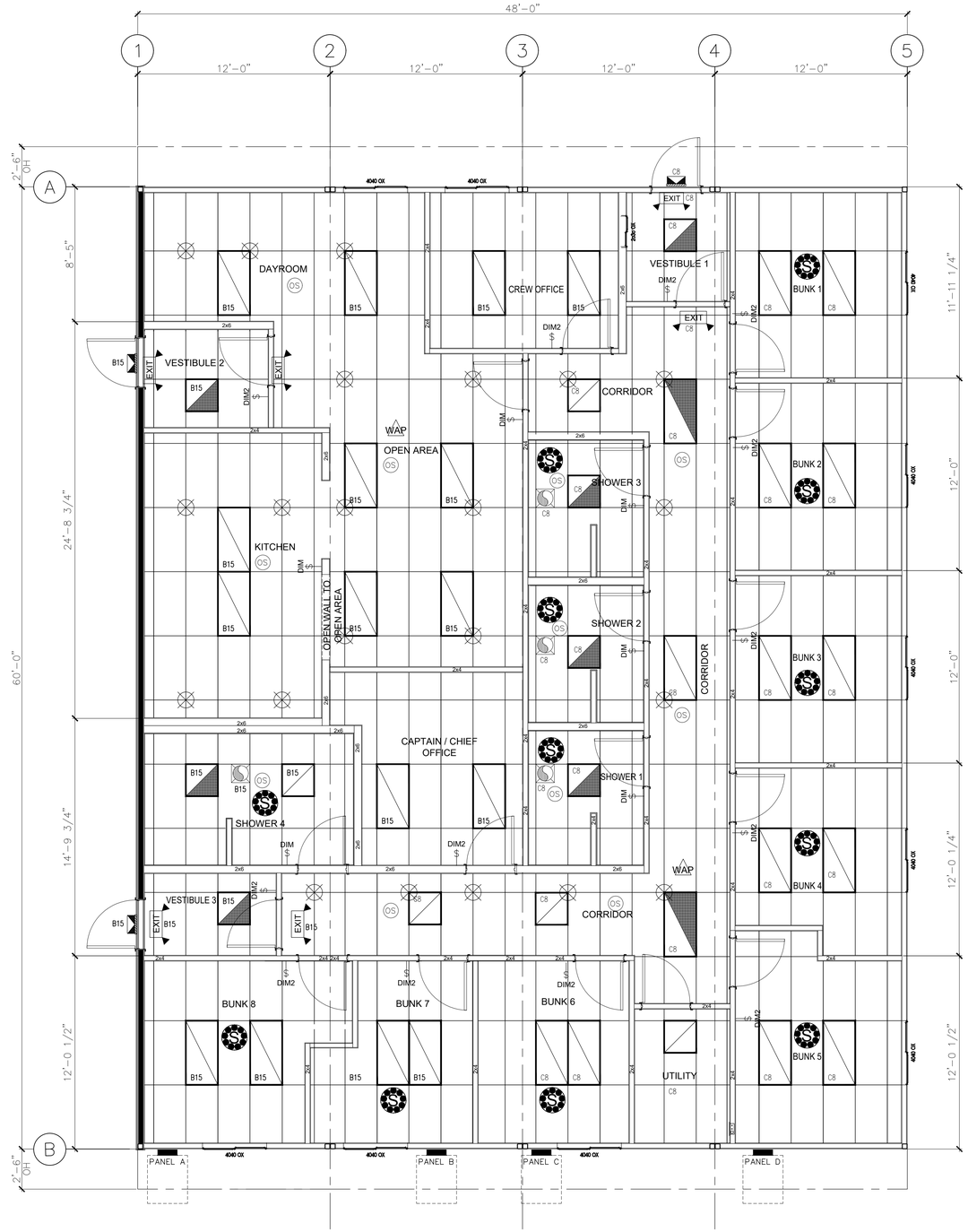

LED ALERTING SPEAKER (USDD DISPATCH ALERTING)

CAT6E CABLE AND RJ45 PLUG FOR CEILING MOUNTED WIRELESS ACCESS POINT

GLOBAL MODULAR incorporated

AURORA DESIGNS · MODTECH Designs · MODULAR STRUCTURES INTERNATIONAL, INC. DESIGNS

CONTRACTORS LICENSE #837357

NORTHERN CALIFORNIA DIVISON
450 COMMERCE AVE
ATWATER, CA 95301
PHONE: (209) 676–8029
FAX: (209) 676–8067
WEBSITE: WWW.GDVI.NET

SOUTHERN CALIFORNIA DIVISON
1860 CHICAGO AVE., SUITE I–7
RIVERSIDE, CA 92507
PHONE: (951) 686–3633
FAX: (951) 686–3666
WEBSITE: WWW.GDVI.NET

THIS DRAWING AND THE MATERIAL CONTAINED THERE-IN ARE THE PROPERTY OF GLOBAL MODULAR, INC. AND SHALL NOT BE REPRODUCED, COPED OR OTHERWISE DISPOSED OF DIRECTLY OR INDIRECTLY AND SHALL NOT BE USED IN WHOLE OR IN PART TO ASSIST IN THE MAKING OF OR FOR THE PURPOSE OF FURNISHING ANY INFORMATION FOR THE MAKING OF DRAWINGS, PRINTS APPARATUS OR PARTS THEREOF WITHOUT THE FULL KNOWLEDGE AND WRITTEN CONSENT OF GLOBAL MODULAR, INC. ALL PATENTABLE MATERIAL CONTAINED HEREIN AND ORIGINATING WITH GLOBAL MODULAR, INC, SHALL BE THE PROPERTY OF GLOBAL MODULAR, INC.

PROJECT NAME:

48x60
VENTURA
FIRE DEPARTMENT
2269 ALESSANDRO DR, VENTURA, CA 93001

PUBLIC WORKS DEPARTMENT ENGINEERING DIVISION
CITY OF SAN BUENAVENTURA

PRINCIPAL ENGINEER — DATE: 5 May 2026
CITY ENGINEER — DATE: 5/7/2026

ARCHITECT OF RECORD

MFR. STRUCTURAL ENGINEER OF RECORD

MFR. PROJECT SPECIFIC PROFESSIONAL OF RECORD

SHEET TITLE:
ELECTRICAL PLAN
LIGHTING

REVISIONS
1 -
2 -
3 -
4 -

PROJECT NO.:	00-0000
DRAWN BY:	00
SCALE:	AS NOTED
DATE:	00-00-00

SHEET NUMBER
E2.0

SPEC NO. 2025-010 DWG. NO. 2025-D-010

FOR REFERENCE ONLY

PANEL SCHEDULE

PANEL A
MAIN BREAKER 200A

Rated Amps: 200 A | Interior: | Exterior: X | NEMA Rated: NEMA 3R
Volts: 120/208 | Phase / Wire: 3 PHASE/4 WIRE | Flush: | Surface: X

Description	Load	Ckt Bkr			Ckt Bkr	Load	Description
			1	2	2	5000	RANGE/OVEN
			3	4	50	5000	RANGE/OVEN
			5	6	1/20	300	HOOD/FAN
			7	8	1/20	360	RECEPT for TV
RECEPTS	1260	1/20	9	10	1/20	780	REFRIGERATOR
RECEPTS	900	1/20	11	12	1/20	780	REFRIGERATOR
RECEPTS	900	1/20	13	14	1/20	780	REFRIGERATOR
RECEPTS	1080	1/20	15	16	1/20	840	DISPOSER
RECEPTS	1440	1/20	17	18			
			19	20			
			21	22	1/20	180	FIRE ALARM
			23	24	1/20	2200	DISHWASHER

15,360 Watts + 17,460 Watts + 13,940 Watts + 11,690 25% Watts ÷ 360 Voltage = 162 A Amps Per Phase

PANEL B
MAIN BREAKER 125A

Rated Amps: 125A | Interior: | Exterior: X | NEMA Rated: NEMA 3R
Volts: 120/208 | Phase / Wire: 3 PHASE/4 WIRE | Flush: | Surface: X

Description	Load	Ckt Bkr			Ckt Bkr	Load	Description
			1	2	1/20	540	EXT. RECEPT/GFCI/WP
			3	4			
			5	6	1/20	360	RECEPT for TV
RECEPT	900	1/20	7	8			
RECEPT	900	1/20	9	10			
RECEPT	900	1/20	11	12			
			13	14			
INT/EXT/EXIT LIGHTS EXH FAN	766	1/20	15	16			
			17	18			
			19	20			
			21	22			
			23	24			

1,440 Watts + 1,666 Watts + 1,260 Watts + 1,092 25% Watts ÷ 360 Voltage = 15 A Amps Per Phase

PANEL C
MAIN BREAKER 125A

Rated Amps: 125A | Interior: | Exterior: X | NEMA Rated: NEMA 3R
Volts: 120/208 | Phase / Wire: 3 PHASE/4 WIRE | Flush: | Surface: X

Description	Load	Ckt Bkr			Ckt Bkr	Load	Description
			1	2	1/20	1440	WASHER
			3	4	2	2375	DRYER
			5	6	30	2375	DRYER
RECEPT	900	1/20	7	8	1/20	1100	INT/EXT/EXIT LIGHTS EXH FAN
RECEPT	540	1/20	9	10			
RECEPT	000	1/20	11	12	1/20	142	RECEPT for TV
			13	14			
			15	16			
			17	18			
			19	20			
			21	22			
			23	24			

11,940 Watts + 11,955 Watts + 10,837 Watts + 8,683 25% Watts ÷ 360 Voltage = 121 A Amps Per Phase

PANEL D
MAIN BREAKER 125A

Rated Amps: 125A | Interior: | Exterior: X | NEMA Rated: NEMA 3R
Volts: 120/208 | Phase / Wire: 3 PHASE/4 WIRE | Flush: | Surface: X

Description	Load	Ckt Bkr			Ckt Bkr	Load	Description
			1	2	1/20	720	RECEPT
			3	4	1/20	720	RECEPT
			5	6			
RECEPT	900	1/20	7	8	1/20	540	RECEPT
RECEPT	720	1/20	9	10			
RECEPTS/GFCI	900	1/20	11	12			
			13	14			
			15	16			
			17	18			
			19	20			
			21	22			
			23	24			

10,480 Watts + 9,760 Watts + 9,220 Watts + 7,365 25% Watts ÷ 360 Voltage = 102 A Amps Per Phase

(L) LABEL AND LOCK ON DEVICE

* CIRCUIT BREAKER TO BE IN ACCORDANCE WITH MANUFACTURER'S RECOMMENDATIONS

** DEDICATED CIRCUIT (RED, LOCKING) LABELED PER NFPA 72:10.6.5.2

- CAM — J BOX FOR CAMERA W/SINGLE DEVICE COVER W/ BLANK PLATE 4SQ BOX W/3/4" CONDUIT TO ATTIC W/ PULLSTRING
- 4 — CAT6E CABLE WALL BOX & PLATE WITH RJ45 JACK-(4) PORTS
- 2 — CAT6E CABLE WALL BOX & PLATE WITH RJ45 JACK-(2) PORTS
- IT EQUIPMENT & TELECOM CENTER,USDD ATX & FIRE ALARM PANEL
- RR2 CIR — ROOM REMOTE/COLOR REMOTE (USDD)
- MSS — MESSAGE SIGN BOARD (USDD)
- TVR — HDTV REMOTE (USDD)
- PB RED PB BLACK — BELL (USDD)
- S — LED ALERTING SPEAKER (USDD DISPATCH ALERTING)
- WAP — CAT6E CABLE AND RJ45 PLUG FOR CEILING MOUNTED WIRELESS ACCESS POINT

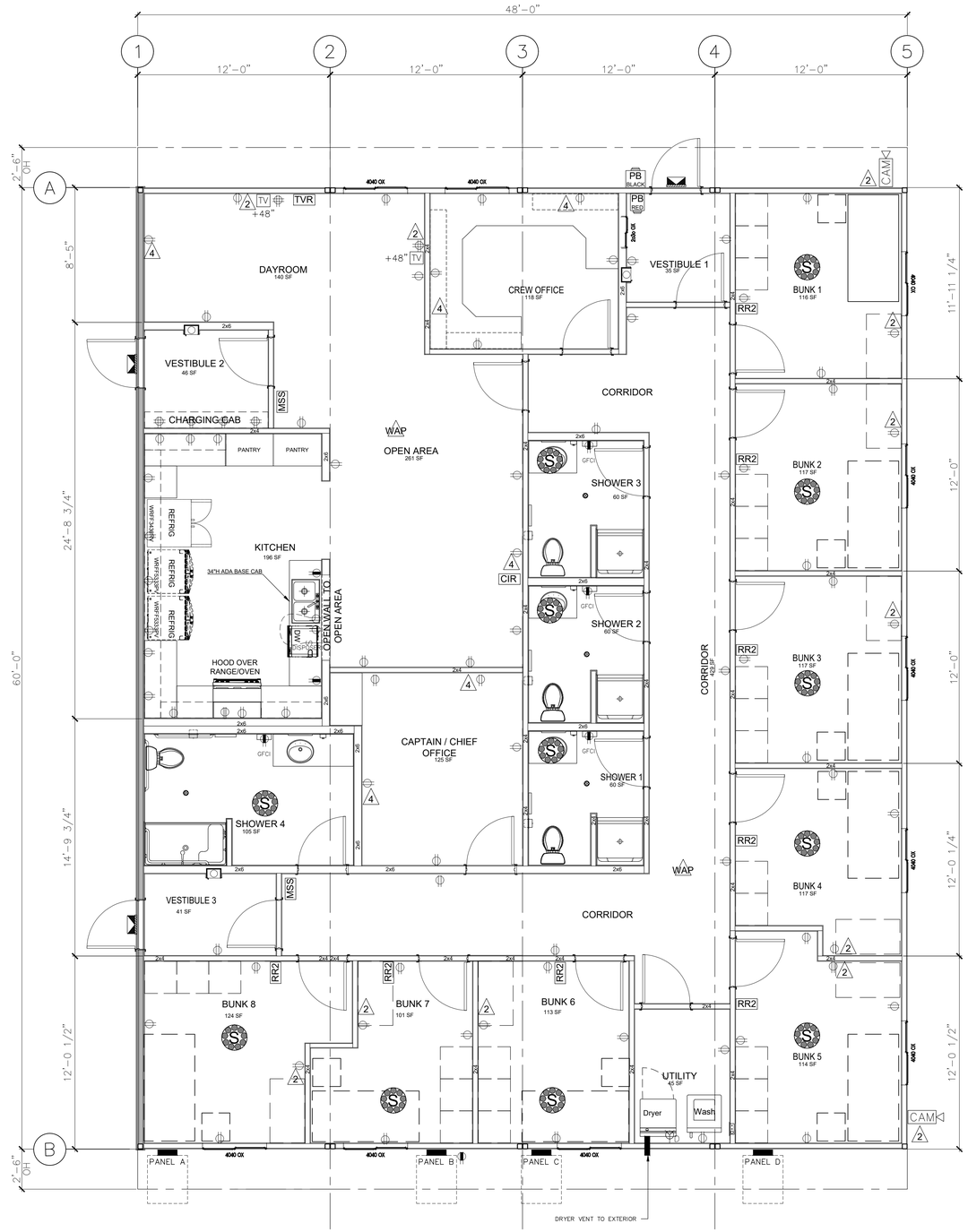

GLOBAL MODULAR incorporated
AURORA DESIGNS | MODTECH Designs | MODULAR STRUCTURES INTERNATIONAL, INC. DESIGN

CONTRACTORS LICENSE #837357

NORTHERN CALIFORNIA DIVISON
450 COMMERCE AVE
ATWATER, CA 95301
PHONE: (209) 676–8029
FAX: (209) 676–8067
WEBSITE: WWW.GDVI.NET

SOUTHERN CALIFORNIA DIVISON
1860 CHICAGO AVE., SUITE I–7
RIVERSIDE, CA 92507
PHONE: (951) 686–3633
FAX: (951) 686–3666
WEBSITE: WWW.GDVI.NET

THIS DRAWING AND THE MATERIAL CONTAINED THERE-IN ARE THE PROPERTY OF GLOBAL MODULAR, INC. AND SHALL NOT BE REPRODUCED, COPED OR OTHERWISE DISPOSED OF DIRECTLY OR INDIRECTLY AND SHALL NOT BE USED IN WHOLE OR IN PART TO ASSIST IN THE MAKING OF OR FOR THE PURPOSE OF FURNISHING ANY INFORMATION FOR THE MAKING OF DRAWINGS, PRINTS APPARATUS OR PARTS THEREOF WITHOUT THE FULL KNOWLEDGE AND WRITTEN CONSENT OF GLOBAL MODULAR, INC. ALL PATENTABLE MATERIAL CONTAINED HEREIN AND ORIGINATING WITH GLOBAL MODULAR, INC, SHALL BE THE PROPERTY OF GLOBAL MODULAR, INC.

PROJECT NAME:

48x60
VENTURA
FIRE DEPARTMENT
2269 ALESSANDRO DR, VENTURA, CA 93001

PUBLIC WORKS DEPARTMENT ENGINEERING DIVISION
CITY OF SAN BUENAVENTURA

PRINCIPAL ENGINEER — DATE: 5 May 2026
CITY ENGINEER — DATE: 5/7/2026

ARCHITECT OF RECORD

MFR. STRUCTURAL ENGINEER OF RECORD

MFR. PROJECT SPECIFIC PROFESSIONAL OF RECORD

SHEET TITLE:

ELECTRICAL PLAN
LOW VOLTAGE

REVISIONS
1 -
2 -
3 -
4 -

PROJECT NO.:	00-0000
DRAWN BY:	00
SCALE:	AS NOTED
DATE:	00-00-00

SHEET NUMBER

E3.0

SPEC NO. 2025-010 DWG. NO. 2025-D-010

FOR REFERENCE ONLY

PLUMBING GENERAL NOTES

1. DO NOT SCALE DRAWINGS. VERIFY DIMENSIONS IN FIELD PRIOR TO COMMENCING WORK.
2. REFER TO ARCHITECTURAL DRAWINGS FOR EXACT PLUMBING FIXTURE LOCATIONS, MOUNTING HEIGHTS AND PLUMBING ROUGH-IN LOCATIONS. THIS SHALL INCLUDE, BUT NOT BE LIMITED TO ALL HANDICAPPED FIXTURES. OBTAIN EXACT FLOOR DRAIN AND FLOOR SINK LOCATIONS FROM FOOD SERVICE DRAWINGS. ROUGH-IN LOCATIONS FOR KITCHENS, BARS, ETC. TO BE TAKEN FROM APPROVED FOOD SERVICE SHOP DRAWINGS.
3. ITEM DESIGNATIONS INDICATED ARE FOR PURPOSES OF THESE DOCUMENTS ONLY. CONTRACTOR SHALL VERIFY WITH THE OWNER ACTUAL DESIGNATION INFORMATION TO BE PROVIDED FOR EACH ITEM OF PLUMBING EQUIPMENT PRIOR TO NAMEPLATE ORDER RELEASE.
4. THE PLUMBING DETAILS SHALL BE INCORPORATED INTO THE ASSOCIATED WORK AND PROVIDE GENERAL GUIDANCE AS TO THE INSTALLATION INTENT WHETHER REFERENCED TO OR NOT. IT IS THE CONTRACTOR'S RESPONSIBILITY TO PROVIDE ALL NECESSARY COMPONENTS FOR A COMPLETE INSTALLATION AND ENSURE THAT ALL INSTALLATIONS ARE IN ACCORDANCE WITH THE EQUIPMENT'S LISTING AND MANUFACTURER'S WRITTEN INSTALLATION INSTRUCTION.
5. SEISMIC RESTRAINTS SHALL BE PROVIDED PER THE LATEST ADOPTED STANDARD BUILDING CODE AND THE SMACNA SEISMIC RESTRAINT MANUAL GUIDELINES FOR MECHANICAL SYSTEMS. THE CONTRACTOR SHALL SUBMIT SHOP DRAWINGS OF THE PROPOSED RESTRAINTS, STRUCTURAL ATTACHMENT METHODS AND RESTRAINT LOCATIONS TO THE ARCHITECT FOR REVIEW. THE SUBMITTED DOCUMENTS SHALL BE PREPARED AND STAMPED BY A STRUCTURAL ENGINEER LICENSED IN THE PROJECT STATE.
6. COORDINATE SPRINKLER DRAIN REQUIREMENTS AND LOCATIONS WITH THE FIRE PROTECTION DIVISION OF WORK.
7. REFER TO CIVIL DRAWINGS FOR INVERT AT SITE UTILITY POINTS OF CONNECTION. PROVIDE OFFSET AND INCREASER FOR STORM DRAIN OR SEWER AS REQUIRED FOR CONNECTION TO CIVIL.
8. PROVIDE TRAP PRIMERS FOR AREAS OF INFREQUENT USE, INCLUDING FLOOR DRAINS IN RESTROOMS AND MECHANICAL ROOMS. EQUAL TO PRECISION PRODUCTS CO. "PRIME-RITE" WITH DISTRIBUTION UNITS FOR MULTIPLE FLOOR DRAINS AND FLOOR SINKS. TRAP PRIMER SHALL BE ACCESSIBLE AND INSTALLED PER MANUFACTURER'S REQUIREMENTS. PROVIDE LINE SIZE SHUT-OFF VALVE AHEAD OF EACH TRAP PRIMER AND PRIMER LINE SHALL BE INSTALLED ON A COLD WATER LINE LESS THAN 2" DIAMETER. ALL ELECTRONIC TYPE TRAP PRIMERS SHALL BE PPP "PRIME-TIME ELECTRONIC TRAP PRIMING MANIFOLD" WITH FOUR (4) TO 30 OUTLETS, VACUUM BREAKER, 24 HOUR CLOCK, MANUAL OVERRIDE, SOLENOID VALVE, CALIBRATED MANIFOLD WITH 1/2" OUTLET COMPRESSION FITTINGS, PROVIDE 3/4" SHUT-OFF VALVE ON INLET. (ELECTRONIC TRAP PRIMERS TO BE LOCATED IN MECHANICAL ROOMS AND CONCRETE BLOCK WALLS.)
9. REFER TO BALANCING VALVE ASSEMBLY DESIGN DETAIL FOR NOMINAL GPM AT EACH HOT WATER RETURN BRANCH LINE CONNECTION.
10. HOT WATER RETURN PIPING BRANCH LINES TO DROP DOWN IN WALL AND CONNECT TO HOT WATER SUPPLY AT STOPS OR AT TEMPERING STATIONS. REFER TO DESIGN DETAILS FOR DIAGRAMS SHOWING CONNECTIONS.
11. ARRANGE WATER HEATERS AND PIPING TO PROVIDE EASE OF DISASSEMBLY AND MAINTENANCE.
12. PROVIDE A 6mm POLYETHYLENE SLEEVE EQUAL TO IPS WATER-TITE FOR COPPER DOMESTIC WATER PIPE BELOW SLAB.
13. HOT AND COLD WATER SHUT-OFF VALVES AND HOT WATER RETURN BALANCING VALVES SHALL BE LOCATED TO BE EASILY ACCESSED.
14. PROVIDE WALL CLEANOUTS AT URINALS IN ACCORDANCE WITH APPLICABLE SECTIONS OF THE ADOPTED STANDARD PLUMBING CODE.
15. VENTS THROUGH ROOF SHALL BE A MINIMUM OF 10'-0" FROM ANY OUTSIDE AIR INTAKES AND BUILDING OPENINGS.
16. EQUIPMENT AND PIPING LOCATIONS SHOWN FROM THE BEST AVAILABLE INFORMATION. CONTRACTOR SHALL FIELD VERIFY SIZE AND LOCATIONS PRIOR TO START OF WORK. IF SYSTEMS ARE NOT AS SHOWN IN DRAWINGS, REPORT DEVIATIONS TO ARCHITECT/ENGINEER WITHIN 48 HOURS OF DISCOVERY.
17. THE CONTRACTOR SHALL BE RESPONSIBLE FOR THE REPAIR AND PATCHING OF DAMAGED ARCHITECTURAL COMPONENTS TO REMAIN DURING THE REMOVAL OF DESIGNATED SYSTEMS. COORDINATE REPAIR REQUIREMENTS WITH ARCHITECT.
18. RESOLVE ALL QUESTIONS OR CONFLICTS WITH ENGINEER BEFORE ANY EQUIPMENT IS ORDERED, MATERIALS FABRICATED OR SYSTEMS INSTALLED.
19. COORDINATE THE INSTALLATION OF MECHANICAL SYSTEMS WITH OTHER TRADES.
20. COORDINATE ALL PENETRATIONS THROUGH STRUCTURAL MEMBERS WITH THE GENERAL CONTRACTOR.
21. COORDINATE AND VERIFY THAT ALL OPENINGS IN WALLS ABOVE CEILING / DOOR LOUVERS / DOOR UNDERCUTS ARE PROVIDED AS INDICATED ON THESE DRAWINGS.
22. COORDINATE EXACT SIZE OF EQUIPMENT HOUSEKEEPING PAD WITH EQUIPMENT OVERALL FOOTPRINT DIMENSIONS.
23. LEVEL ALL EQUIPMENT CURBS / BASES PRIOR TO INSTALLATION OF ANY EQUIPMENT.
24. INSTALL FULL SIZE CONDENSATE DRAIN WITH TRAP SEAL DEPTH EQUAL TO 1.5 X UNIT TOTAL STATIC PRESSURE FOR EACH COOLING COIL. DISCHARGE DRAIN TO ROOF DRAIN FOR ROOFTOP UNITS AND TO FLOOR DRAIN FOR FAN COIL UNITS AND INDOOR AIR HANDLING UNITS.
25. SEAL ALL WALL AND ROOF PENETRATIONS WATERTIGHT WITH SILICONE CAULKING AND BACKER ROD.
26. PROVIDE 30X30 ACCESS PANELS IN "HARD" CEILINGS FOR ACCESS TO ALL MOTORS / CONTROLS / BALANCING DAMPERS AND FIRE DAMPERS.
27. PROVIDE OFFSETS AS NECESSARY TO ACCOMMODATE STRUCTURE AND OTHER TRADES.
28. ALL PIPE, PIPE FITTINGS, TRAPS, FIXTURES, MATERIAL, AND DEVICES USED IN PLUMBING SYSTEM SHALL BE LISTED OR THIRD-PARTY CERTIFIED BY AN APPROVED LISTING AGENCY AND SHALL CONFORM TO APPLICABLE RECOGNIZED STANDARDS REFERENCED IN THE 2022 CALIFORNIA PLUMBING CODE.
29. THE LEAD CONTENT OF PIPES, PIPE OR PIPE FITTINGS, AND FIXTURES UBTENDED TO CONVEY OR DISPENSE WATER FOR HUMAN CONSUMPTION SHALL BE IN ACCORDANCE WITH SECTION 116875 OF THE HEALTH AND SAFETY CODE.
30. FLOOR AND TRENCH DRAINS SHALL BE IN ACCORDANCE WITH ASME A112.6.3.
31. FLOOR SINKS SHALL BE IN ACCORDANCE WITH ASME A112.6.7.
32. PROVIDE INSULATION FOR HOT WATER PIPING OM ACCORDANCE WITH SECTION 609.11.2. THE INSULATION WALL THICKNESS FOR PIPE SIZES UP TO 2" IN DIAMETER SHALL BE MOT LESS THAN DIAMETER OF THE PIPE, AND SHALL BE LESS THAN 2" FOR PIPE SIZES 2" OR MORE IN DIAMETER.
33. WATER SUPPLY AND DRAIN PIPES UNDER ACCESSIBLE LAVATORIES AND SINKS SHALL BE INSULATED. CPC 403.3, ALL PIPES TO BE INSULATED.

PIPING SUPPORT CRITERIA

MATERIAL	TYPE OF JONT	HORIZONTAL	VERTICAL
CAST	LEAD AND OAKUM	5 FEET, EXCEPT WHERE 10 FOOT LENGTHS ARE INSTALLED	BASE AND EACH FLOOR, NOT TO EXCEED 15 FEET.
CAST	COMPRESSION GASKET	EVERY OTHER JOINT, UNLESS OVER 4 FEET THEN SUPPORT EACH JOINT	BASE AND EACH FLOOR, NOT TO EXCEED 15 FEET.
COPPER	SOLDERED OR BRAZED	1 1/2 INCH AND SMALLER, 6 FEET; 2 INCHES AND LARGER, 10 FEET	BASE AND EACH FLOOR, NOT TO EXCEED 10 FEET.
SCH 40 PVC/ABS	SOLVENT CEMENTED	ALL SIZES, 4 FEET; ALLOW FOR EXPANSION EVERY 30 FEET	BASE AND EACH FLOOR; PROVIDE MID-STORY GUIDES; PROVIDE EXPANSION EVERY 30 FT.
CPVC	SOLVENT CEMENTED	1 INCH AND SMALLER, 3 FEET; 1 1/4 INCHES AND LARGER, 4 FEET	BASE AND EACH FLOOR; PROVIDE MID-STORY GUIDES
PEX	COLD EXPANSION, INSERT AND COMPRESSION	1 INCH AND SMALLER, 32 INCHES 1 1/4 INCHES AND LARGER, 4 FEET	BASE AND EACH FLOOR; PROVIDE MID-STORY GUIDES

1. SIZED PER TABLE 313.1, CPC.
2. FOR CSST PIPE FOLLOW MANUFACTURE INSTALLATION PROCEDURES.

LEGEND

ABBREVIATION	SYMBOL	DESCRIPTION
CD	CD	DRAIN PIPING
CW HW		COLD AND HOT WATER PIPING
HWR		HOT WATER RECIRCULATION PIPING
	(110°)	110° F HOT WATER PIPING
	(140°)	140° F HOT WATER PIPING
ST CR	ST CR	STEAM AND STEAM CONDENSATE RETURN PIPING
PCD	PCD	PUMPED CONDENSATE PIPING
SS	SS	SANITARY SEWER PIPING
GSS	GSS	GREASE SANITARY SEWER PIPING
GSS	GSS	GREASE SANITARY SEWER WITH HEAT TRACE
CWV	CWV	COMBINATION WASTE AND VENT PIPING
SD OD	SD OD	STORM DRAIN AND OVERFLOW STORM DRAIN PIPING
V	V	VENT PIPING
G	G	GAS PIPING
MPG	MPG	MEDIUM PRESSURE GAS PIPING
		UNION
		GATE OR BALL VALVE
		BALANCING VALVE
		PRESSURE REGULATING VALVE
PRV		PRESSURE REDUCING VALVE
		SOLENOID VALVE
		GLOBE VALVE
HEV		HOSE END DRAIN VALVE
		CHECK VALVE
		STRAINER
		LUBRICATED PLUG VALVE
		PNEUMATIC CONTROL VALVE
		TRIPLE DUTY VALVE
		COMBINATION FLOW CONTROL AND BALL VALVE
		BUTTERFLY VALVE
RPBP		REDUCED PRESSURE BACKFLOW PREVENT0R
	T	TRAP
		GAGE AND COCK
		CURB VALVE IN VALVE BOX
		RELIEF VALVE
	TP	TEST PLUG
		THERMOMETER
AAV, MAV	AAV MAV	AUTOMATIC AIR VENT AND MANUAL AIR VENT
AP		ACCESS PANEL
NC, NO		NORMALLY CLOSED, NORMALLY OPEN
S, Sp, Sv		SWITCH, SWITCH W/PILOT AND SWITCH, VARIABLE SPEED
RE:		REFERENCE
	A M-1 / A M-1 / R-1 M-1	SECTION A ON SHEET M-1 DETAIL A ON SHEET M-1 RISER R-1 ON SHEET M-1
	1 / 1 / 1	WORK NOTE 1, REVISION NOTE 1, DEMO NOTE 1, POINT OF CONNECTION
E, R, N	(E), (R), (N)	EXISTING, RELOCATED AND NEW

SHEET INDEX

DRAWING NUMBER	DRAWING TITLE
P0.1	GENERAL NOTES & LEGENDS - PLUMBING
P0.2	SCHEDULES - PLUMBING
P1.0	OVERALL FLOOR PLAN - PLUMBING
P3.0	ROOF PLAN - PLUMBING
P4.1	ENLARGE FLOOR PLAN - SANITARY WASTE & VENT
P4.2	ENLARGE FLOOR PLAN - DOMESTIC WATER
P5.1	ISOMETRIC - SANITARY WASTE & VENT
P5.2	ISOMETRIC - DOMESTIC WATER
P6.0	DETAILS - PLUMBING
P7.0	TITLE 24 - PLUMBING

APPLICABLE CODES

CONTRACTOR SHALL COMPLY WITH ALL APPLICABLE STATE CODES WHETHER INDICATED HEREIN OR NOT.

2025 CALIFORNIA BUILDING STANDARDS CODE:

- PART 1 - CALIFORNIA ADMINISTRATIVE CODE (CAC)
- PART 2 - CALIFORNIA BUILDING CODE (CBC)
- PART 3 - CALIFORNIA ELECTRICAL CODE (CEC)
- PART 4 - CALIFORNIA MECHANICAL CODE (CMC)
- PART 5 - CALIFORNIA PLUMBING CODE (CPC)
- PART 6 - CALIFORNIA ENERGY CODE (CENC)
- PART 7 - (CURRENTLY VACANT)
- PART 8 - CALIFORNIA HISTORICAL BUILDING CODE (CHBC)
- PART 9 - CALIFORNIA FIRE CODE (CFC)
- PART 10 - CALIFORNIA EXISTING BUILDING CODE (CEBC)
- PART 11 - CALIFORNIA GREEN BUILDING STANDARDS CODE (CALGREEN)
- PART 12 - CALIFORNIA REFERENCE STANDARDS CODE

GLOBAL MODULAR Incorporated

AURORA DESIGNS · MODTECH Designs · MODULAR STRUCTURES INTERNATIONAL INC. DESIGNS

CONTRACTORS LICENSE #837357

NORTHERN CALIFORNIA DIVISON
450 COMMERCE AVE
ATWATER, CA 95301
PHONE: (209) 676-8029
FAX: (209) 676-8067
WEBSITE: WWW.GDVI.NET

SOUTHERN CALIFORNIA DIVISON
1860 CHICAGO AVE., SUITE I-7
RIVERSIDE, CA 92507
PHONE: (951) 686-3633
FAX: (951) 686-3666
WEBSITE: WWW.GDVI.NET

THIS DRAWING AND THE MATERIAL CONTAINED THERE-IN ARE THE PROPERTY OF GLOBAL MODULAR, INC. AND SHALL NOT BE REPRODUCED, COPED OR OTHERWISE DISPOSED OF DIRECTLY OR INDIRECTLY AND SHALL NOT BE USED IN WHOLE OR IN PART TO ASSIST IN THE MAKING OF OR FOR THE PURPOSE OF FURNISHING ANY INFORMATION FOR THE MAKING OF DRAWINGS, PRINTS APPARATUS OR PARTS THEREOF WITHOUT THE FULL KNOWLEDGE AND WRITTEN CONSENT OF GLOBAL MODULAR, INC. ALL PATENTABLE MATERIAL CONTAINED HEREIN AND ORIGINATING WITH GLOBAL MODULAR, INC, SHALL BE THE PROPERTY OF GLOBAL MODULAR, INC.

PROJECT NAME:

48x60
VENTURA
FIRE DEPARTMENT
2269 ALESSANDRO DR, VENTURA, CA 93001

PUBLIC WORKS DEPARTMENT ENGINEERING DIVISION
CITY OF SAN BUENAVENTURA

PRINCIPAL ENGINEER — DATE: 5 May 2026

CITY ENGINEER — DATE: 5/7/2026

ARCHITECT OF RECORD

MFR. STRUCTURAL ENGINEER OF RECORD

MFR. PROJECT SPECIFIC PROFESSIONAL OF RECORD

SHEET TITLE:

GENERAL NOTES & LEGENDS - PLUMBING

REVISIONS
1 -
2 -
3 -
4 -

PROJECT NO.:	00-0000
DRAWN BY:	00
SCALE:	AS NOTED
DATE:	00-00-00

SHEET NUMBER

P0.1

SPEC NO. 2025-010 DWG. NO. 2025-D-010

FOR REFERENCE ONLY

PLUMBING FIXTURE AND EQUIPMENT SCHEDULE/CONNECTION

MARK	FIXTURE	FIXTURE ROUGH-IN W	V	CW	HW	DESCRIPTION
L-1	LAVATORY	2"	2"	1/2"	1/2"	AMERICAN STANDARD DECORUM SINK MODEL 9024000EC.020, WALL MOUNTED, VITREOUS CHINA, OVAL BASIN, W/SLOAN SENSOR FAUCET MODEL SF-2450, 0.5 GPM, OR EQUIVALENT
WC-1	WATER CLOSET	4"	2"	3/4"	-	AMERICAN STANDARD GLENWALL VORMAX TOILET MODEL 2882108.02, FLUSH TANK, WALL MOUNTED, VITREOUS CHINA, ELONGATED BOWL, W/ RIGHT HAND TRIP, 1.28 GPF, ADA COMPLIANT, OR EQUIVALENT
KS-1	KITCHEN SINK	2"	2"	1/2"	1/2"	1.8 GPM @ 60 PSI.
US-1	UTILITY SINK	2"	2"	1/2"	1/2"	2.2 GPM @ 60 PSI.
SH-1	SHOWER	2"	2"	1/2"	1/2"	1.75 GPM SHOWER HEAD @ 80 PSI MAXIMUM FLOW. PROVIDE A THERMOSTATIC OR PRESSURE BALANCE TYPE MIXING VALVE FOR THERMAL SHOCK AND SCALD PROTECTION.
DW-1	DISHWASHER	2"	2"	1/2"	1/2"	REFER TO ARCHITECT SCHEDULE FOR SPECIFICATIONS.
IM-1	ICE MAKER	-	-	1/2"	-	REFER TO ARCHITECT SCHEDULE FOR SPECIFICATIONS.
BV-1	BALANCING VALVE	-	-	-	-	BELL AND GOSSETT, MODEL CB-3/4S LF, CIRCUIT SETTER PLUS, LEAD FREE CALIBRATED BALANCE VALVE.
RCP-1	RECIRCULATING PUMP	-	-	-	-	BELL AND GOSSETT, MODEL E3-4V/BTPRZ, LEAD-FREE, ENERGY EFFICIENT E3 ECORCIRC CIRCULATOR, 2 GPM AT 2 FOOT HEAD, 115V WITH AUTOMATIC OVERLOAD PROTECTION. PUMP SHALL HAVE BUILT-IN ADJUSTABLE THERMOSTAT.
FS-1	FLOOR SINK	2"	2"	-	-	J.R. SMITH, MODEL 3111L, 6" DEEP CAST IRON BODY WITH ACID RESISTING ENAMELED INTERIOR, ANCHOIR FLANGE WITH SEEPAGE HOLES, CLAMP COLLAR, ALUMINUM SEDIMENT BUCKET, AND 12" SQUARE NICKEL BRONZE RIM AND HALF GRATE. USE PUSH-ON JOINT OF OUTLET SIZE AS SHOWN ON PLANS.
FD-1	FLOOR DRAIN	2"	2"	-	-	ZURN MEDIUM DUTY FLOOR DRAIN MODEL Z507, 7" TOP DRAIN, DURA-COATED CAST IRON BODY, OR EQUIVALENT. 2% SLOPE TO ALL FLOOR DRAINS. W/ TRAP PRIMER CONNECTION.

ACCESSORY SCHEDULE

MARK	FIXTURE	FIXTURE ROUGH-IN W	V	CW	HW	DESCRIPTION
WCO	WALL CLEANOUT	SEE PLANS	-	-	-	ZURN WALL CLEANOUT MODEL Z1441-VP, DURA-COATED CAST IRON BODY, GAS AND WATERTIGHT, VANDAL PROOF SCREWS, OR EQUIVALENT. COORDINATE FINAL LOCATIONS AND FINISH WITH ARCHITECT.
GCO	GRADE CLEANOUT	SEE PLANS	-	-	-	ZURN GRADE CLEANOUT MODEL Z1400-DC, HEAVY DUTY, ADJUSTABLE LEVELING, GAS AND WATERTIGHT, VANDAL PROOF SCREWS, OR EQUIVALENT. COORDINATE FINISH WITH ARCHITECT.
TMV-1	THERMOSTATIC MIXING VALVE	-	-	1/2"	1/2"	SYMMONS MAXLINE THERMOSTATIC MIXING VALVE MODEL 7-210-CK-D, W/ INTEGRAL CHECK VALVES AND WALL MOUNTING BRACKET, ASSE 1017 AND ASSE 1070 COMPLIANT. PROVIDE DIAL TYPE THERMOMETER ON TEMPERED WATER LINE AT TMV OULET AND SET @ 110°F.
FCO	FLOOR CLEANOUT	SEE PLANS	-	-	-	ZURN FLOOR CLEANOUT MODEL Z1400-VP, ADJUSTABLE LEVELING, GAS AND WATERTIGHT, VANDAL PROOF SCREWS, OR EQUIVALENT. COORDINATE FINAL LOCATIONS AND FINISH WITH ARCHITECT.

PIPE MATERIAL SCHEDULE

SERVICE	LOCATION	PEX	TYPE "K" COPPER	TYPE "L" COPPER	TYPE "M" COPPER	DXV COPPER	PVC SCHEDULE 40	SCH 10 STAINLESS	NO-HUB CAST IRON	SCH 40 BLACK STEEL	GROOVED TYPE L COPPER	ADDITIONAL COMMENTS
		MATERIALS										
DOMESTIC WATER	BELOW GRADE		B									
	INSIDE, 4" & SMALLER			B								
	INSIDE, 5" & LARGER							B				
DOMESTIC HOT WATER	INSIDE, 4" & SMALLER			I								
	INSIDE, 5" & LARGE							I				
NATURAL GAS	ABOVE GRADE									B		
MEDIUM PRESSURE GAS	ABOVE GRADE											N/A
WASTE	BELOW GRADE						B					
	INSIDE						B					
VENT	BELOW GRADE						B					
	ABOVE INSIDE						B					
STORM DRAIN OVERFLOW DRAIN	BELOW GRADE											N/A
	INSIDE											N/A
TRAP PRIMER	BELOW GRADE		B									
	ABOVE GRADE		B									
CONDESATE	ABOVE GRADE						B					
GREASE WASTE	BELOW GRADE						B					

LEGEND

B = BARE PIPE
I = INSULATED
H = HEAT TRACED

HYDRAULIC CALCULATION

SYSTEM PARAMETERS

Water Meter:	Yes
PRV Required:	No
Total Fixture Units:	27.00 WSFU
Total System GPM:	19 GPM
Maximum System GPM:	100 GPM
Flush Type:	Tank
(N) Water Meter Size (in):	1 1/2

	SIZE (IN)	MAKE	MODEL
(N) Backflow Prevention Device:	1 1/2	ZURN	975XL2

HYDRAULIC CALCULATIONS:

Maximum Site Pressure:	65.0 psi	Minimum Site Pressure:	55.0 psi
Pressure Loss Through 1.5-inch BFP:	13.2 psi		
Water Meter Losses:	0.5 psi		
Maximum Building Pressure:	51.3 psi	Minimum Building Pressure:	41.3 psi
Minimum Building Pressure	41.3 psi		
Pressure Loss Due to Elevation:	4.1 psi	Static Head:	9.5'
Residual Pressure @ Farthest WC Fixture:	20.0 psi	Total Developed Length:	620.0'
Pressure Available for Friction Loss:	17.2 psi	25% Fitting Length:	155.0'
Allowable Friction Loss Per 100 ft:	2.2 psi	Total Equivalent Length:	775.0'

ALLOWABLE FRICTION LOSS PER 100 FT:	**2.2 psi**

SIZING CRITERIA:

PIPE SIZE (IN)	CW FLUSH VALVE (W.S.F.U.) (8 FT/S MAX)	CW FLUSH TANK (W.S.F.U.) (8 FT/S MAX)	HW FLUSH TANK (W.S.F.U.) (5 FT/S MAX)
1/2	-	-	-
3/4	-	4	4
1	-	10	10
1 1/4	14	20	20
1 1/2	35	36	36
2	132	115	115
2 1/2	329	294	245
3	666	559	406
3 1/2	1091	945	585
4	1668	1583	840

MAXIMUM FIXTURE FLOW RATES

FIXTURE TYPE	MAXIMUM FLOW RATE
NON RESIDENTIAL LAVATORY FAUCETS	0.5 GPM @ 60 PSI
METERING FAUCETS	0.2 GALLONS/CYCLE
SINK FAUCETS	1.8 GPM @ 60 PSI
WATER CLOSETS	1.28 GALLONS/FLUSH

TANK WATER HEATER SIZING CALCULATIONS

SYSTEM PARAMETERS

Mark	Plumbing Fixtures	Quantity	GPH	Total GPH
L-1	LAVATORY	4	5	20
US-1	UTILITY SINK	1	10	10
KS-1	KITCHEN SINK	1	20	20
SH-1	SHOWER	4	30	120
DW-1	DISHWASHER	1	30	30
			Possible Maximum Demand:	**200 GPH**

Demand Factor:	0.40
Probable Maximum Demand:	**80 GPH**

WATER HEATER SELECTION REQUIREMENTS

Fuel Type:	Electric
Thermal Efficiency:	96%
Recovery Rate:	80 GPH
Temperature Rise:	80 °F
Minimum Heating Element:	**16 KW**
Storage Capacity Factor:	1.00
Minimum Storage Tank Size:	**80 GAL**

WATER SUPPLY FIXTURE QUANTITIES

Appliances, Appurtenance, or Fixtures	Quantity	WSFU Public	WSFU Total
Lavatory	4	1	4
Water Closet, 1.28 GPF Gravity Tank	4	2.5	10
Shower, each head	4	2	8
Kitchen Sink	1	1.5	1.5
Utility Sink	1	1.5	1.5
Ice Maker	1	0.5	0.5
Dishwasher	1	1.5	1.5
		TOTAL FIXTURE UNITS:	**27**
		TOTAL SYSTEM GPM:	**19**

TOTAL SYSTEM DFU

Appliances, Appurtenance, or Fixtures	Quantity	DFU Public	DFU Total
Lavatory	4	1	4
Water Closet, 1.28 GPF Gravity Tank	4	4	16
Shower, each head	4	2	8
Kitchen Sink	1	2	2
Dishwasher	1	2	2
Utility Sink	1	2	2
Floor Sink	1	2	2
Floor Drain	4	2	8
		TOTAL DFU:	**44**

ELECTRIC STORAGE TANK WATER HEATER SCHEDULE

TAG	QTY.	MANUFACTURER	MODEL	CAPACITY (GALLON)	KW	RECOVERY @100°F RISE (GPH)	ELECTRICAL DATA (V/P/A)	DIMENSION (INCHES) WIDTH	HEIGHT	CONNECTION (INCHES) CW	HW	OPERATING WEIGHT (LBS)
EWH-1	1	RHEEM	ES120	119.9	18	74	240/1/75	36	67-5/8	1-1/2	1-1/2	430

EXPANSION TANK SCHEDULE

TAG	LOCATION	QTY.	TANK VOLUME (GALLONS)	DIMENSIONS (INCHES) DIAMETER	HEIGHT	STATIC SUPPY PRESSURE (PSI)	WEIGHT (LBS)	MAKE	MODEL
ET-1	REFER TO PLUMBING PLAN	1	6.4	12	18	65	17	AMTROL	ST-12C-DD

WATER HAMMER ARRESTOR

WHA SYMBOL	I	II	III	IV	V	VI
J.R. SMITH HYDROTROL OR APPROVED EQUAL	5005	5010	5020	5030	5040	5050
FIXTURE UNITS	1-11	12-32	33-60	61-113	114-154	115-330

GLOBAL MODULAR Incorporated
AURORA DESIGNS · MODTECH Designs · MODULAR STRUCTURES INTERNATIONAL, INC. DESIGNS
CONTRACTORS LICENSE #837357

NORTHERN CALIFORNIA DIVISON
450 COMMERCE AVE
ATWATER, CA 95301
PHONE: (209) 676-8029
FAX: (209) 676-8067
WEBSITE: WWW.GDVI.NET

SOUTHERN CALIFORNIA DIVISON
1860 CHICAGO AVE., SUITE I-7
RIVERSIDE, CA 92507
PHONE: (951) 686-3633
FAX: (951) 686-3666
WEBSITE: WWW.GDVI.NET

THIS DRAWING AND THE MATERIAL CONTAINED THERE-IN ARE THE PROPERTY OF GLOBAL MODULAR, INC. AND SHALL NOT BE REPRODUCED, COPED OR OTHERWISE DISPOSED OF DIRECTLY OR INDIRECTLY AND SHALL NOT BE USED IN WHOLE OR IN PART TO ASSIST IN THE MAKING OF OR FOR THE PURPOSE OF FURNISHING ANY INFORMATION FOR THE MAKING OF DRAWINGS, PRINTS APPARATUS OR PARTS THEREOF WITHOUT THE FULL KNOWLEDGE AND WRITTEN CONSENT OF GLOBAL MODULAR, INC. ALL PATENTABLE MATERIAL CONTAINED HEREIN AND ORIGINATING WITH GLOBAL MODULAR, INC, SHALL BE THE PROPERTY OF GLOBAL MODULAR, INC.

PROJECT NAME:

48x60
VENTURA
FIRE DEPARTMENT
2269 ALESSANDRO DR, VENTURA, CA 93001

PUBLIC WORKS DEPARTMENT ENGINEERING DIVISION
CITY OF SAN BUENAVENTURA

PRINCIPAL ENGINEER — DATE: 5 May 2026
CITY ENGINEER — DATE: 5/7/2026
ARCHITECT OF RECORD

MFR. STRUCTURAL ENGINEER OF RECORD

MFR. PROJECT SPECIFIC PROFESSIONAL OF RECORD

SHEET TITLE:

SCHEDULES - PLUMBING

REVISIONS
1 -
2 -
3 -
4 -

PROJECT NO.:	00-0000
DRAWN BY:	00
SCALE:	AS NOTED
DATE:	00-00-00

SHEET NUMBER

P0.2

SPEC NO. 2025-010 DWG. NO. 2025-D-010

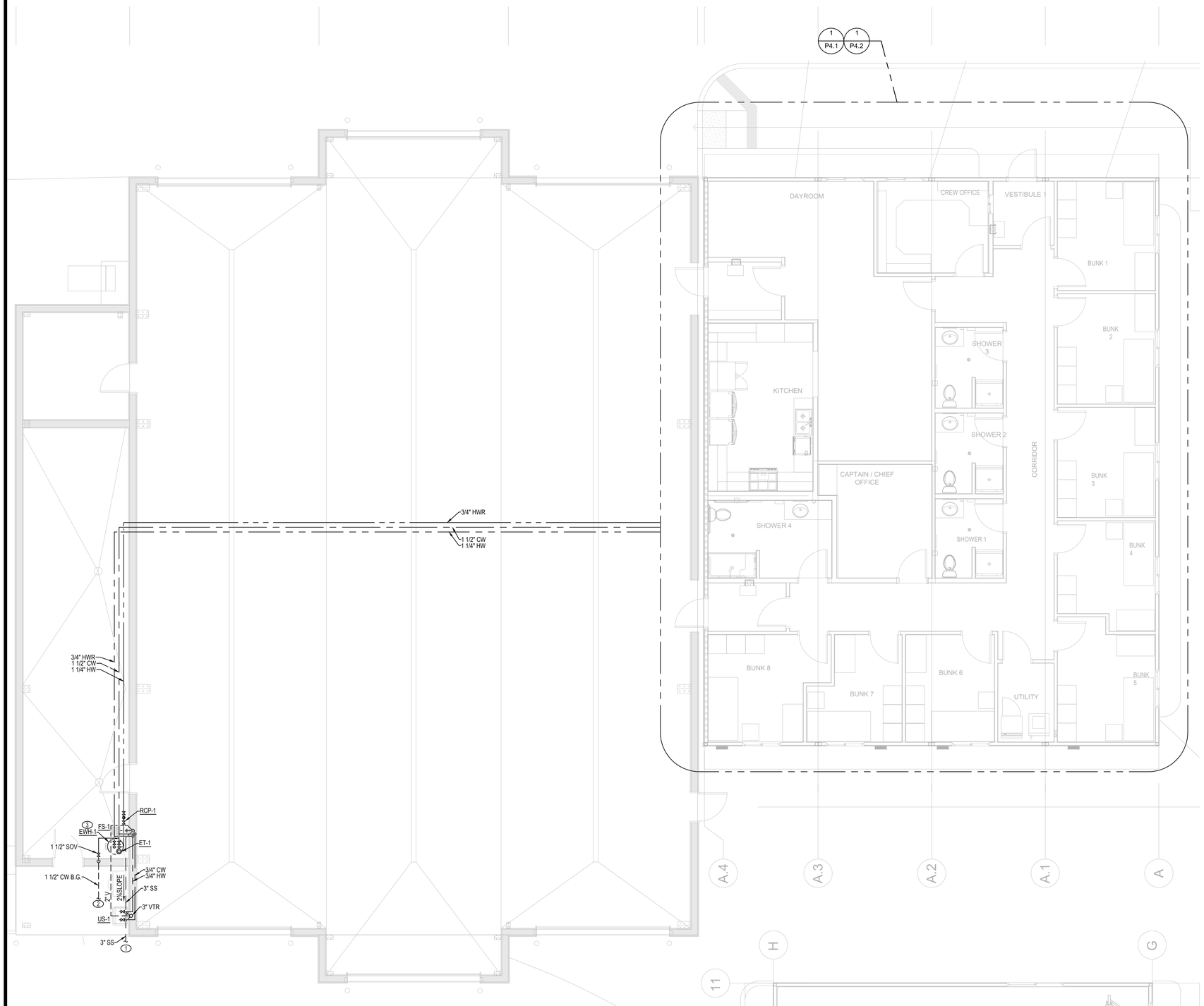

1 OVERALL FLOOR PLAN - PLUMBING
3/16" = 1'-0"

GENERAL NOTES

A. NOT IN USE.

PLUMBING KEY NOTES

1. CONNECT TO THE EXISTING SANITARY SEWER PIPE. CONTRACTOR TO VERIFY EXACT SIZE, LOCATION AND ELEVATION PRIOR TO WORK START.
2. CONNECT TO THE NEW 1 1/2" WATER METER AND NEW 1 1/2" BFP. CONTRACTOR TO VERIFY EXACT LOCATION AND ELEVATION OF WATER METER AND BFP AT SITE PRIOR OF WORK START.
3. 3/4" TEMPERATURE AND RELIEF DRAIN TERMINATE IN FLOOR SINK WITH MINIMUM 1" AIR GAP.

GLOBAL MODULAR Incorporated
AURORA DESIGNS
MODTECH Designs
MODULAR STRUCTURES INTERNATIONAL INC DESIGNS
CONTRACTORS LICENSE #837357

NORTHERN CALIFORNIA DIVISON
450 COMMERCE AVE
ATWATER, CA 95301
PHONE: (209) 676-8029
FAX: (209) 676-8067
WEBSITE: WWW.GDVI.NET

SOUTHERN CALIFORNIA DIVISON
1860 CHICAGO AVE., SUITE I-7
RIVERSIDE, CA 92507
PHONE: (951) 686-3633
FAX: (951) 686-3666
WEBSITE: WWW.GDVI.NET

THIS DRAWING AND THE MATERIAL CONTAINED THERE-IN ARE THE PROPERTY OF GLOBAL MODULAR, INC. AND SHALL NOT BE REPRODUCED, COPED OR OTHERWISE DISPOSED OF DIRECTLY OR INDIRECTLY AND SHALL NOT BE USED IN WHOLE OR IN PART TO ASSIST IN THE MAKING OF OR FOR THE PURPOSE OF FURNISHING ANY INFORMATION FOR THE MAKING OF DRAWINGS, PRINTS APPARATUS OR PARTS THEREOF WITHOUT THE FULL KNOWLEDGE AND WRITTEN CONSENT OF GLOBAL MODULAR, INC. ALL PATENTABLE MATERIAL CONTAINED HEREIN AND ORIGINATING WITH GLOBAL MODULAR, INC, SHALL BE THE PROPERTY OF GLOBAL MODULAR, INC.

PROJECT NAME:

48x60
VENTURA
FIRE DEPARTMENT
2269 ALESSANDRO DR, VENTURA, CA 93001

PUBLIC WORKS DEPARTMENT ENGINEERING DIVISION
CITY OF SAN BUENAVENTURA

PRINCIPAL ENGINEER — DATE: 5 May 2026
CITY ENGINEER — DATE: 5/7/2026

ARCHITECT OF RECORD

MFR. STRUCTURAL ENGINEER OF RECORD

MFR. PROJECT SPECIFIC PROFESSIONAL OF RECORD

SHEET TITLE:

OVERALL FLOOR PLAN - PLUMBING

REVISIONS
1 -
2 -
3 -
4 -

PROJECT NO.:	00-0000
DRAWN BY:	00
SCALE:	AS NOTED
DATE:	00-00-00

SHEET NUMBER

P1.0

SPEC NO. 2025-010 DWG. NO. 2025-D-010

FOR REFERENCE ONLY

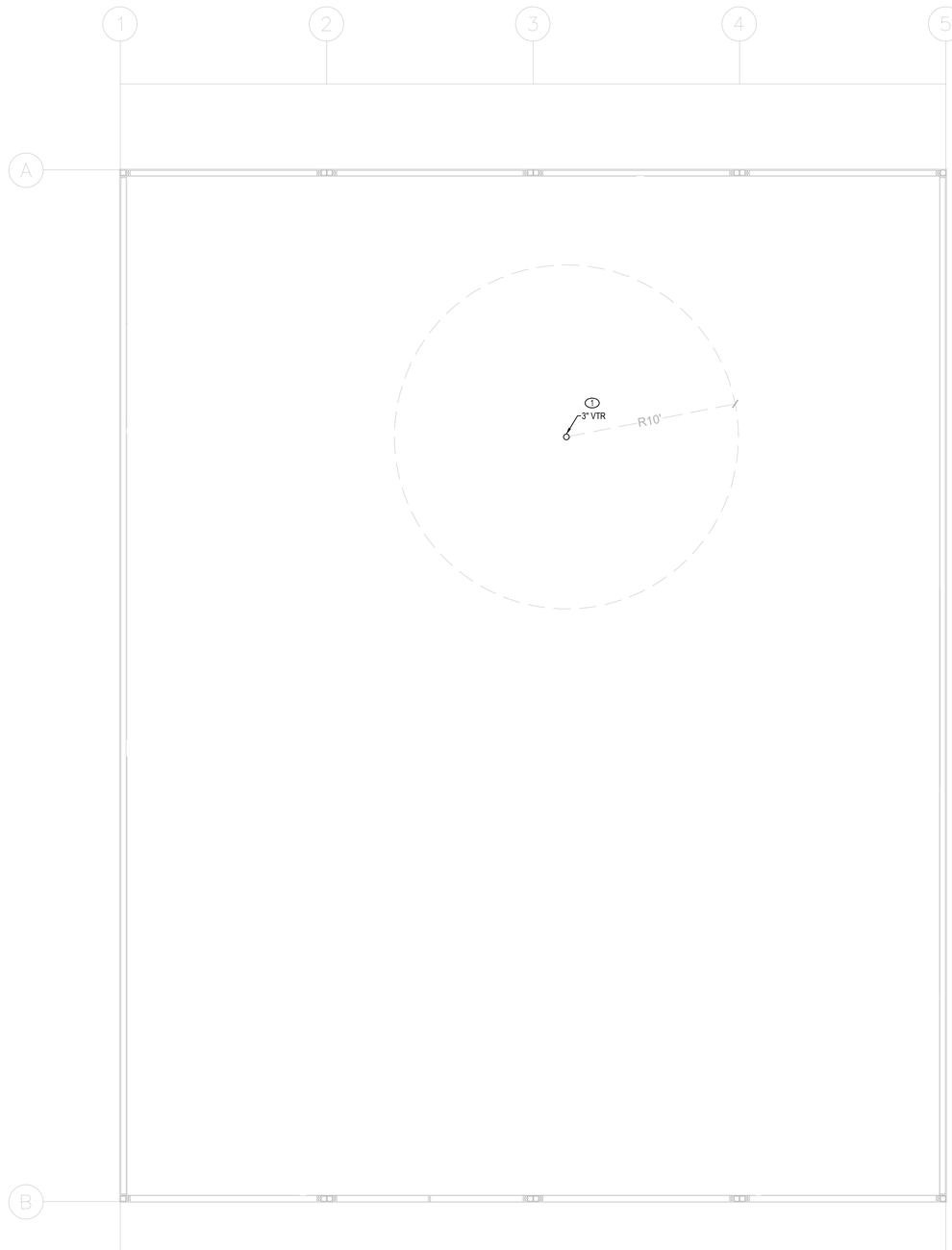

1 ROOF PLAN - PLUMBING
1/4" = 1'-0"

GENERAL NOTES

A. NOT IN USE.

PLUMBING KEY NOTES

1. 3" VENT THROUGH ROOF. VERIFY THE FINAL LOCATION PRIOR TO ROUGH-IN. VENT SHALL BE TERMINATED WITH A WEATHER PROTECTIVE CAP.

GLOBAL MODULAR Incorporated
AURORA DESIGNS · MODTECH Designs · MODULAR STRUCTURES INTERNATIONAL, INC. DESIGNS
CONTRACTORS LICENSE #837357

NORTHERN CALIFORNIA DIVISON
450 COMMERCE AVE
ATWATER, CA 95301
PHONE: (209) 676-8029
FAX: (209) 676-8067
WEBSITE: WWW.GDVI.NET

SOUTHERN CALIFORNIA DIVISON
1860 CHICAGO AVE., SUITE I-7
RIVERSIDE, CA 92507
PHONE: (951) 686-3633
FAX: (951) 686-3666
WEBSITE: WWW.GDVI.NET

THIS DRAWING AND THE MATERIAL CONTAINED THERE-IN ARE THE PROPERTY OF GLOBAL MODULAR, INC. AND SHALL NOT BE REPRODUCED, COPED OR OTHERWISE DISPOSED OF DIRECTLY OR INDIRECTLY AND SHALL NOT BE USED IN WHOLE OR IN PART TO ASSIST IN THE MAKING OF OR FOR THE PURPOSE OF FURNISHING ANY INFORMATION FOR THE MAKING OF DRAWINGS, PRINTS APPARATUS OR PARTS THEREOF WITHOUT THE FULL KNOWLEDGE AND WRITTEN CONSENT OF GLOBAL MODULAR, INC. ALL PATENTABLE MATERIAL CONTAINED HEREIN AND ORIGINATING WITH GLOBAL MODULAR, INC, SHALL BE THE PROPERTY OF GLOBAL MODULAR, INC.

PROJECT NAME:

48x60
VENTURA
FIRE DEPARTMENT
2269 ALESSANDRO DR, VENTURA, CA 93001

PUBLIC WORKS DEPARTMENT ENGINEERING DIVISION
CITY OF SAN BUENAVENTURA

PRINCIPAL ENGINEER — DATE: 5 May 2026

CITY ENGINEER — DATE: 5/7/2026

ARCHITECT OF RECORD

MFR. STRUCTURAL ENGINEER OF RECORD

MFR. PROJECT SPECIFIC PROFESSIONAL OF RECORD

SHEET TITLE:

ROOF PLAN - PLUMBING

REVISIONS
1 -
2 -
3 -
4 -

PROJECT NO.:	00-0000
DRAWN BY:	00
SCALE:	AS NOTED
DATE:	00-00-00

SHEET NUMBER

P3.0

SPEC NO. 2025-010 DWG. NO. 2025-D-010

FOR REFERENCE ONLY

GENERAL NOTES

A. NOT IN USE.

1 ENLARGE FLOOR PLAN - SANITARY WASTE & VENT
1/4" = 1'-0"

PLUMBING KEY NOTES

1. CONNECT TO THE EXISTING SANITARY SEWER PIPE. CONTRACTOR TO VERIFY EXACT SIZE, LOCATION AND ELEVATION PRIOR TO WORK START.
2. CONNECT DISHWASHER SANITARY PIPE TO THE TAILPIECE OF THE KITCHEN SINK.
3. 3/4" CD DOWN IN WALL AND CONNECT TO TAIL PIECE OF LAVATORY.

GLOBAL MODULAR Incorporated
AURORA DESIGNS · MODTECH Designs · MODULAR STRUCTURES INTERNATIONAL, INC. DESIGNS
CONTRACTORS LICENSE #837357

NORTHERN CALIFORNIA DIVISON
450 COMMERCE AVE
ATWATER, CA 95301
PHONE: (209) 676-8029
FAX: (209) 676-8067
WEBSITE: WWW.GDVI.NET

SOUTHERN CALIFORNIA DIVISON
1860 CHICAGO AVE., SUITE I-7
RIVERSIDE, CA 92507
PHONE: (951) 686-3633
FAX: (951) 686-3666
WEBSITE: WWW.GDVI.NET

THIS DRAWING AND THE MATERIAL CONTAINED THERE-IN ARE THE PROPERTY OF GLOBAL MODULAR, INC. AND SHALL NOT BE REPRODUCED, COPED OR OTHERWISE DISPOSED OF DIRECTLY OR INDIRECTLY AND SHALL NOT BE USED IN WHOLE OR IN PART TO ASSIST IN THE MAKING OF OR FOR THE PURPOSE OF FURNISHING ANY INFORMATION FOR THE MAKING OF DRAWINGS, PRINTS APPARATUS OR PARTS THEREOF WITHOUT THE FULL KNOWLEDGE AND WRITTEN CONSENT OF GLOBAL MODULAR, INC. ALL PATENTABLE MATERIAL CONTAINED HEREIN AND ORIGINATING WITH GLOBAL MODULAR, INC, SHALL BE THE PROPERTY OF GLOBAL MODULAR, INC.

PROJECT NAME:

48x60
VENTURA
FIRE DEPARTMENT
2269 ALESSANDRO DR, VENTURA, CA 93001

PUBLIC WORKS DEPARTMENT ENGINEERING DIVISION
CITY OF SAN BUENAVENTURA

PRINCIPAL ENGINEER — DATE: 5 May 2026
CITY ENGINEER — DATE: 5/7/2026

ARCHITECT OF RECORD

MFR. STRUCTURAL ENGINEER OF RECORD

MFR. PROJECT SPECIFIC PROFESSIONAL OF RECORD

SHEET TITLE:

ENLARGE FLOOR PLAN - SANITARY WASTE & VENT

REVISIONS
1 -
2 -
3 -
4 -

PROJECT NO.:	00-0000
DRAWN BY:	00
SCALE:	AS NOTED
DATE:	00-00-00

SHEET NUMBER

P4.1

SPEC NO. 2025-010 DWG. NO. 2025-D-010

GENERAL NOTES

A. NOT IN USE.

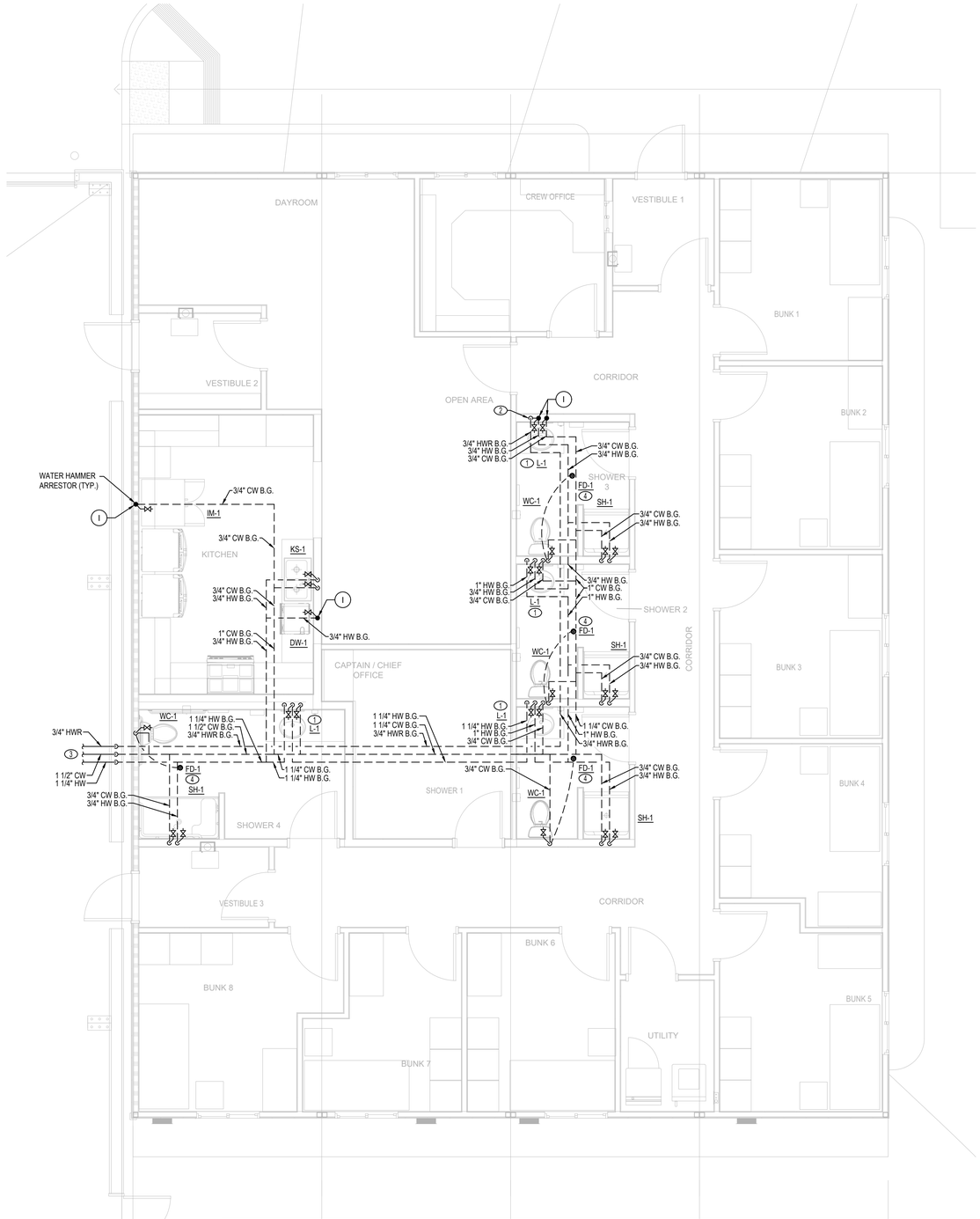

1 ENLARGE FLOOR PLAN - DOMESTIC WATER
1/4" = 1'-0"

PLUMBING KEY NOTES

1. THERMOSTATIC MIXING VALVE (TMV-1) AND SHUT OFF VALVE (SOV) PLACED VERTICALLY. REFER SHEET 4.2 FOR MORE DETAILS.
2. BALANCING VALVE (BV-1) AND CHECK VALVE PLACED VERTICALLY. REFER SHEET 4.2 FOR MORE DETAILS.
3. REFER TO SHEET P1.0 OVERALL PLAN FOR CONTINUATION.
4. 1/2" CW TO TRAP PRIMER.

GLOBAL MODULAR Incorporated

AURORA DESIGNS · MODTECH Designs · MODULAR STRUCTURES INTERNATIONAL, INC. DESIGNS

CONTRACTORS LICENSE #837357

NORTHERN CALIFORNIA DIVISON
450 COMMERCE AVE
ATWATER, CA 95301
PHONE: (209) 676-8029
FAX: (209) 676-8067
WEBSITE: WWW.GDVI.NET

SOUTHERN CALIFORNIA DIVISON
1860 CHICAGO AVE., SUITE I-7
RIVERSIDE, CA 92507
PHONE: (951) 686-3633
FAX: (951) 686-3666
WEBSITE: WWW.GDVI.NET

THIS DRAWING AND THE MATERIAL CONTAINED THERE-IN ARE THE PROPERTY OF GLOBAL MODULAR, INC. AND SHALL NOT BE REPRODUCED, COPED OR OTHERWISE DISPOSED OF DIRECTLY OR INDIRECTLY AND SHALL NOT BE USED IN WHOLE OR IN PART TO ASSIST IN THE MAKING OF OR FOR THE PURPOSE OF FURNISHING ANY INFORMATION FOR THE MAKING OF DRAWINGS, PRINTS APPARATUS OR PARTS THEREOF WITHOUT THE FULL KNOWLEDGE AND WRITTEN CONSENT OF GLOBAL MODULAR, INC. ALL PATENTABLE MATERIAL CONTAINED HEREIN AND ORIGINATING WITH GLOBAL MODULAR, INC, SHALL BE THE PROPERTY OF GLOBAL MODULAR, INC.

PROJECT NAME:

48x60
VENTURA
FIRE DEPARTMENT
2269 ALESSANDRO DR, VENTURA, CA 93001

PUBLIC WORKS DEPARTMENT ENGINEERING DIVISION
CITY OF SAN BUENAVENTURA

PRINCIPAL ENGINEER — DATE: 5 May 2026

CITY ENGINEER — DATE: 5/7/2026

ARCHITECT OF RECORD

MFR. STRUCTURAL ENGINEER OF RECORD

MFR. PROJECT SPECIFIC PROFESSIONAL OF RECORD

SHEET TITLE:

ENLARGE FLOOR PLAN - DOMESTIC WATER

REVISIONS
1 -
2 -
3 -
4 -

PROJECT NO.:	00-0000
DRAWN BY:	00
SCALE:	AS NOTED
DATE:	00-00-00

SHEET NUMBER

P4.2

SPEC NO. 2025-010 DWG. NO. 2025-D-010

PLUMBING KEY NOTES

1. CONNECT TO THE EXISTING SANITARY SEWER PIPE. CONTRACTOR TO VERIFY EXACT SIZE, LOCATION AND ELEVATION PRIOR TO WORK START.

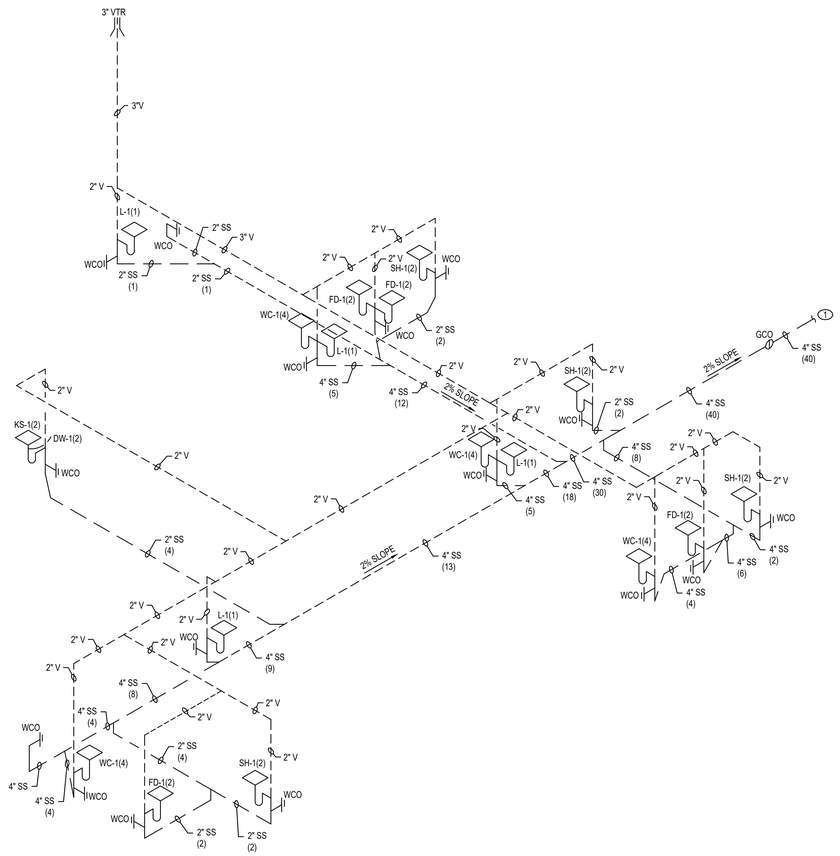

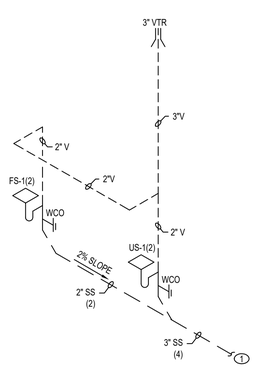

1 ISOMETRIC - SANITARY WASTE & VENT
NTS

GLOBAL MODULAR Incorporated
AURORA DESIGNS
MODTECH Designs
MODULAR STRUCTURES INTERNATIONAL, INC. DESIGNS
CONTRACTORS LICENSE #837357

NORTHERN CALIFORNIA DIVISON
450 COMMERCE AVE
ATWATER, CA 95301
PHONE: (209) 676-8029
FAX: (209) 676-8067
WEBSITE: WWW.GDVI.NET

SOUTHERN CALIFORNIA DIVISON
1860 CHICAGO AVE., SUITE I-7
RIVERSIDE, CA 92507
PHONE: (951) 686-3633
FAX: (951) 686-3666
WEBSITE: WWW.GDVI.NET

THIS DRAWING AND THE MATERIAL CONTAINED THERE-IN ARE THE PROPERTY OF GLOBAL MODULAR, INC. AND SHALL NOT BE REPRODUCED, COPED OR OTHERWISE DISPOSED OF DIRECTLY OR INDIRECTLY AND SHALL NOT BE USED IN WHOLE OR IN PART TO ASSIST IN THE MAKING OF OR FOR THE PURPOSE OF FURNISHING ANY INFORMATION FOR THE MAKING OF DRAWINGS, PRINTS APPARATUS OR PARTS THEREOF WITHOUT THE FULL KNOWLEDGE AND WRITTEN CONSENT OF GLOBAL MODULAR, INC. ALL PATENTABLE MATERIAL CONTAINED HEREIN AND ORIGINATING WITH GLOBAL MODULAR, INC, SHALL BE THE PROPERTY OF GLOBAL MODULAR, INC.

PROJECT NAME:

48x60
VENTURA
FIRE DEPARTMENT
2269 ALESSANDRO DR, VENTURA, CA 93001

PUBLIC WORKS DEPARTMENT ENGINEERING DIVISION
CITY OF SAN BUENAVENTURA

PRINCIPAL ENGINEER — DATE: 5 May 2026
CITY ENGINEER — DATE: 5/7/2026

ARCHITECT OF RECORD

MFR. STRUCTURAL ENGINEER OF RECORD

MFR. PROJECT SPECIFIC PROFESSIONAL OF RECORD

SHEET TITLE:

ISOMETRIC - SANITARY WASTE & VENT

REVISIONS
1 -
2 -
3 -
4 -

PROJECT NO.:	00-0000
DRAWN BY:	00
SCALE:	AS NOTED
DATE:	00-00-00

SHEET NUMBER

P5.1

SPEC NO. 2025-010 DWG. NO. 2025-D-010

FOR REFERENCE ONLY

PLUMBING KEY NOTES

1. CONNECT TO THE NEW 1 1/2" WATER METER AND NEW 1 1/2" BFP. CONTRACTOR TO VERIFY EXACT LOCATION AND ELEVATION OF WATER METER AND BFP AT SITE PRIOR OF WORK START.
2. 1/2" CW TO TRAP PRIMER.

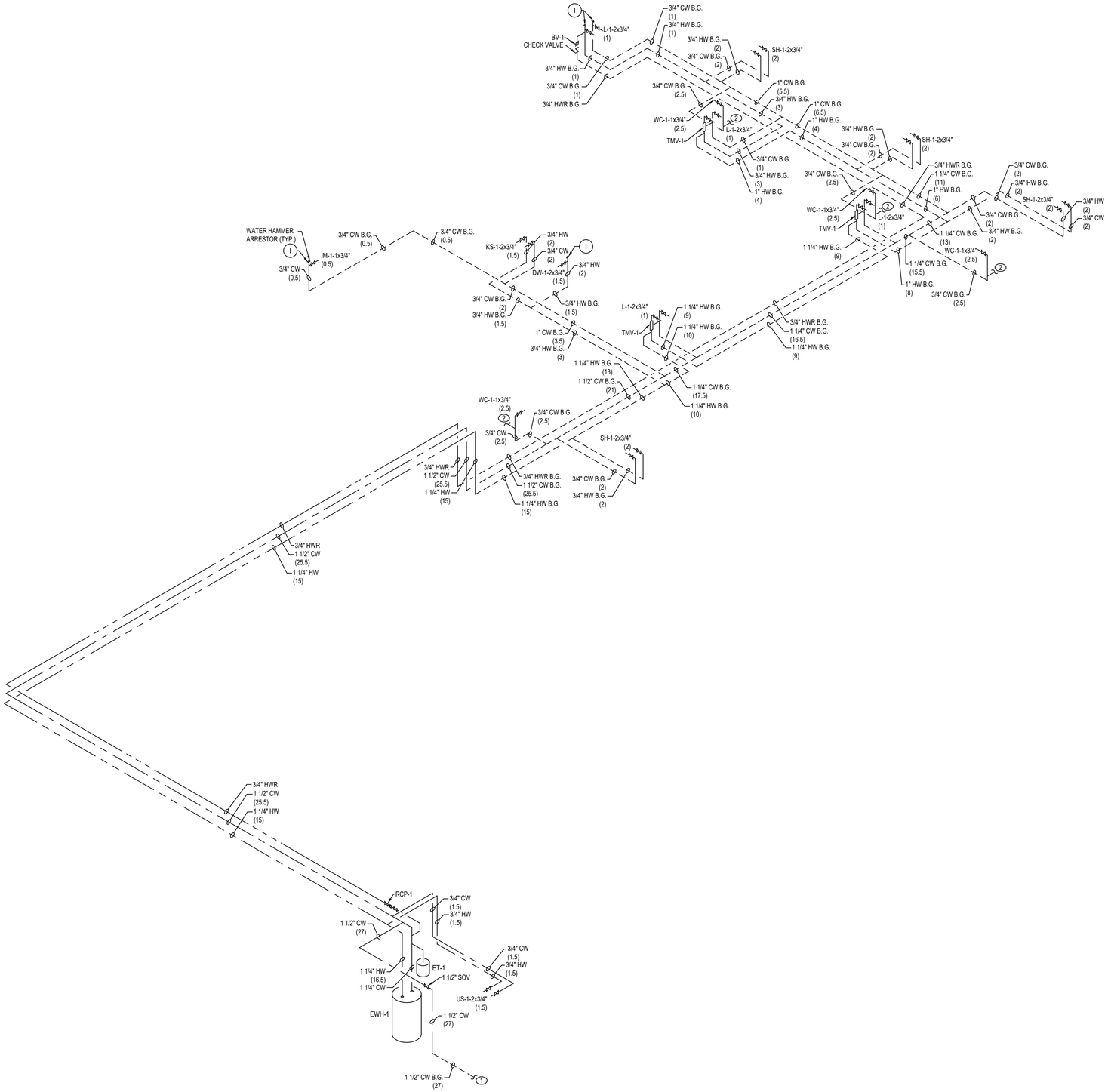

1 ISOMETRIC - DOMESTIC WATER
NTS

GLOBAL MODULAR Incorporated

AURORA DESIGNS · MODTECH Designs · MODULAR STRUCTURES INTERNATIONAL, INC. DESIGNS

CONTRACTORS LICENSE #837357

NORTHERN CALIFORNIA DIVISON
450 COMMERCE AVE
ATWATER, CA 95301
PHONE: (209) 676-8029
FAX: (209) 676-8067
WEBSITE: WWW.GDVI.NET

SOUTHERN CALIFORNIA DIVISON
1860 CHICAGO AVE., SUITE I-7
RIVERSIDE, CA 92507
PHONE: (951) 686-3633
FAX: (951) 686-3666
WEBSITE: WWW.GDVI.NET

THIS DRAWING AND THE MATERIAL CONTAINED THERE-IN ARE THE PROPERTY OF GLOBAL MODULAR, INC. AND SHALL NOT BE REPRODUCED, COPED OR OTHERWISE DISPOSED OF DIRECTLY OR INDIRECTLY AND SHALL NOT BE USED IN WHOLE OR IN PART TO ASSIST IN THE MAKING OF OR FOR THE PURPOSE OF FURNISHING ANY INFORMATION FOR THE MAKING OF DRAWINGS, PRINTS APPARATUS OR PARTS THEREOF WITHOUT THE FULL KNOWLEDGE AND WRITTEN CONSENT OF GLOBAL MODULAR, INC. ALL PATENTABLE MATERIAL CONTAINED HEREIN AND ORIGINATING WITH GLOBAL MODULAR, INC, SHALL BE THE PROPERTY OF GLOBAL MODULAR, INC.

PROJECT NAME:

48x60
VENTURA
FIRE DEPARTMENT
2269 ALESSANDRO DR, VENTURA, CA 93001

PUBLIC WORKS DEPARTMENT ENGINEERING DIVISION
CITY OF SAN BUENAVENTURA

PRINCIPAL ENGINEER — DATE: 5 May 2026

CITY ENGINEER — DATE: 5/7/2026

ARCHITECT OF RECORD

MFR. STRUCTURAL ENGINEER OF RECORD

MFR. PROJECT SPECIFIC PROFESSIONAL OF RECORD

SHEET TITLE:

ISOMETRIC - DOMESTIC WATER

REVISIONS
1 -
2 -
3 -
4 -

PROJECT NO.:	00-0000
DRAWN BY:	00
SCALE:	AS NOTED
DATE:	00-00-00

SHEET NUMBER

P5.2

SPEC NO. 2025-010 DWG. NO. 2025-D-010

FOR REFERENCE ONLY

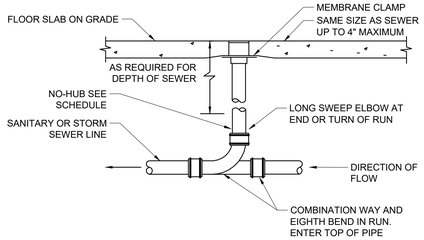

NOTES:
1. PROVIDE ROUND SECURED NICKEL BRONZE ADJUSTABLE TOP WITH "CO" CAST IN COVER.
2. PROVIDE CLEANOUTS TOP WITH VARIATIONS SUITABLE FOR FLOOR COVERING (CARPET MARKER, RECESSED FOR TILE, SCORIATED FOR UNFINISHED FLOORS).
3. PROVIDE BRONZE PLUG IN CAST IRON BODY.
4. LOCATE AT BUILDING EXIT, AT ENDS OF RUNS, AT TURNS OF PIPE GREATER THAN 45 DEGREES, AT 50' INTERVALS ON STRAIGHT RUNS, AND WHERE SHOWN ON PLANS.
5. PROVIDE BACKFILL PER ARCHITECTURAL SPECIFICATIONS.
6. LOCATE CLEANOUTS WHERE THERE IS 18" CLEAR AROUND.
7. CONSULT LOCAL CODES FOR OTHER FCO REQUIREMENTS.

1 FLOOR CLEANOUT
NTS

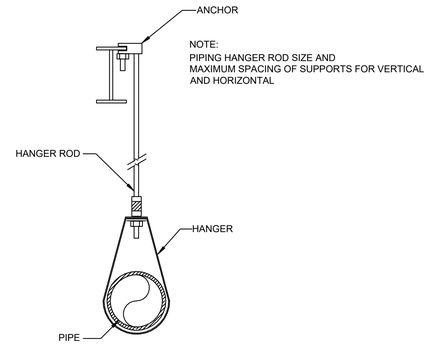

NOTE:
PIPING HANGER ROD SIZE AND MAXIMUM SPACING OF SUPPORTS FOR VERTICAL AND HORIZONTAL

2 PIPE HANGAR
NTS

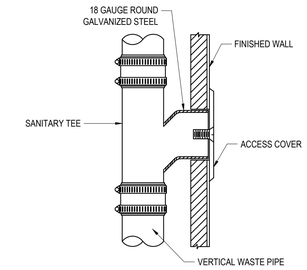

3 WALL CLEANOUT DETAIL
NTS

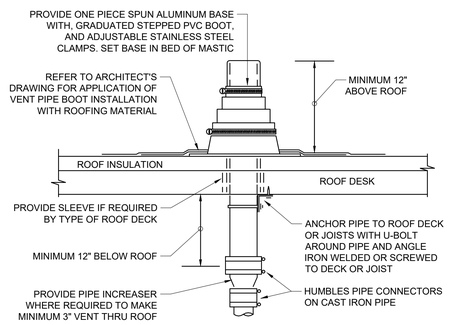

REFER TO PLANS FOR VTR PIPE SIZES AND LOCATIONS. LOCATE VTR MINIMUM TEN FEET HORIZONTAL OR THREE FEET VERTICAL ABOVE ANY BUILDING OPENING OR FRESH AIR INTAKE, AND ONE FOOT FROM ANY VERTICAL SURFACE. PROVIDE 1" FIBERGLASS INSULATION WITH ALL- SERVICE JACKET ON VENT PIPE INSIDE BUILDING WITHIN SIX FEET OF VENT THRU ROOF LOCATION. VERIFY FLASHING AND COUNTERFLASHING WITH ROOFING CONTRACTOR.

4 VENT THRU ROOF
NTS

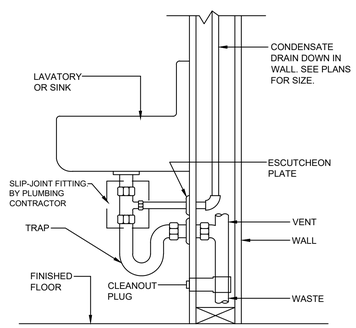

5 TYPICAL CONNECTION AT LAVATORY
NTS

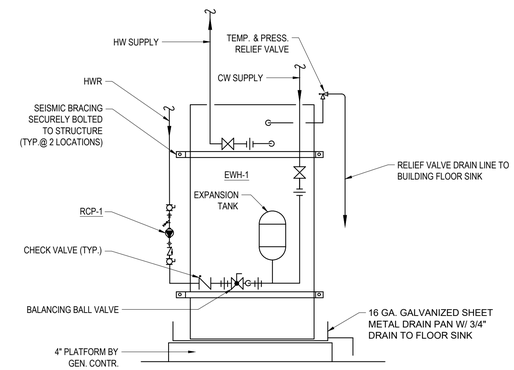

6 ELECTRIC STORAGE WATER HEATER DETAIL
NTS

GLOBAL MODULAR Incorporated
AURORA DESIGNS · MODTECH Designs · MODULAR STRUCTURES INTERNATIONAL, INC. DESIGNS
CONTRACTORS LICENSE #837357

NORTHERN CALIFORNIA DIVISON
450 COMMERCE AVE
ATWATER, CA 95301
PHONE: (209) 676-8029
FAX: (209) 676-8067
WEBSITE: WWW.GDVI.NET

SOUTHERN CALIFORNIA DIVISON
1860 CHICAGO AVE., SUITE I-7
RIVERSIDE, CA 92507
PHONE: (951) 686-3633
FAX: (951) 686-3666
WEBSITE: WWW.GDVI.NET

THIS DRAWING AND THE MATERIAL CONTAINED THERE-IN ARE THE PROPERTY OF GLOBAL MODULAR, INC. AND SHALL NOT BE REPRODUCED, COPED OR OTHERWISE DISPOSED OF DIRECTLY OR INDIRECTLY AND SHALL NOT BE USED IN WHOLE OR IN PART TO ASSIST IN THE MAKING OF OR FOR THE PURPOSE OF FURNISHING ANY INFORMATION FOR THE MAKING OF DRAWINGS, PRINTS APPARATUS OR PARTS THEREOF WITHOUT THE FULL KNOWLEDGE AND WRITTEN CONSENT OF GLOBAL MODULAR, INC. ALL PATENTABLE MATERIAL CONTAINED HEREIN AND ORIGINATING WITH GLOBAL MODULAR, INC, SHALL BE THE PROPERTY OF GLOBAL MODULAR, INC.

PROJECT NAME:

48x60
VENTURA
FIRE DEPARTMENT
2269 ALESSANDRO DR, VENTURA, CA 93001

PUBLIC WORKS DEPARTMENT ENGINEERING DIVISION
CITY OF SAN BUENAVENTURA

PRINCIPAL ENGINEER — DATE: 5 May 2026
CITY ENGINEER — DATE: 5/7/2026
ARCHITECT OF RECORD

MFR. STRUCTURAL ENGINEER OF RECORD

MFR. PROJECT SPECIFIC PROFESSIONAL OF RECORD

SHEET TITLE:

DETAILS - PLUMBING

REVISIONS
1 -
2 -
3 -
4 -

PROJECT NO.:	00-0000
DRAWN BY:	00
SCALE:	AS NOTED
DATE:	00-00-00

SHEET NUMBER
P6.0
SPEC NO. 2025-010 DWG. NO. 2025-D-010

FOR REFERENCE ONLY

STATE OF CALIFORNIA
Domestic Water Heating System
CALIFORNIA ENERGY COMMISSION

CERTIFICATE OF COMPLIANCE			NRCC-PLB-E
This document is used to demonstrate compliance for nonresidential occupancies with requirements in §110.1, §110.3, §120.3, and §140.5, and with requirements in §141.0 for additions and alterations, for domestic water heating scopes using the prescriptive path. For high-rise residential and hotel/motel occupancies compliance is demonstrated with requirements in §110.1, §110.3, §160.4 and §170.2(d), and with requirements §180.1 for additions and §180.2 for alterations.			
Project Name:	VENTURA FIRE DEPARTMENT	**Report Page:**	**(Page 1 of 7)**
Project Address:	2269 ALESSANDRO DR, VENTURA, CA 93001	**Date Prepared:**	2026-03-31T07:03:29-04:00

A. GENERAL INFORMATION

01	Project Location (city)	VENTURA	02	Climate Zone	6
03	Occupancy Types Within Project (select all that apply):				

● All Other Occupancies

B. PROJECT SCOPE

This table includes domestic water heating systems that are within the scope of the permit application and are demonstrating compliance using the prescriptive paths outlined in §140./ §170.2(d) and §141.0(a)/§180.1, or §141.0(b)2N / §180.2 for additions or alterations. Solar water heating systems are documented on the NRCC-SAB compliance document. Combined hydronic water heating systems are documented on the NRCC-MCH compliance document.

01	02	03
My project consists of (check all that apply):	System Type [1,2]	System Components
☒ New system (DHW system being installed for the first time)	Serving Nonresidential or MF/Hotel/Motel Common use area	☒ Equipment ☒ Distribution ☒ Controls
☐ System Alteration (equipment, distribution or controls)		☐ Equipment ☐ Distribution ☐ Controls

[1] *FOOTNOTES: Point of use water heaters, or other non-central systems used to serve nonresidential spaces, are considered individual systems.*
[2] *Dwelling units refers to hotel/motel guest rooms and units in a multifamily residential occupancy.*
[3] *DHW systems serving 2 or more dwelling units are considered "Central Systems" for multifamily and hotel/motel occupancies*

C. COMPLIANCE RESULTS

Table C will indicate if the project data input into the compliance document is compliant with water heating requirements. If this table says "DOES NOT COMPLY" or "COMPLIES with Exceptional Conditions" refer to Table D. or the table indicated as not compliant for guidance.

01	02	03	04	05
Domestic Hot Water Equipment	Distribution Systems	Controls	Pool/Spa	**Compliance Results**
Table F	Table G	Table H	Table J	
Yes	Yes	Yes		COMPLIES

D. EXCEPTIONAL CONDITIONS

This table is auto-filled with uneditable comments because of selections made or data entered in tables throughout the form.

STATE OF CALIFORNIA
Domestic Water Heating System
CALIFORNIA ENERGY COMMISSION

CERTIFICATE OF COMPLIANCE			NRCC-PLB-E
Project Name:	VENTURA FIRE DEPARTMENT	**Report Page:**	**(Page 2 of 7)**
		Date Prepared:	2026-03-31T07:03:29-04:00

E. ADDITIONAL REMARKS

This table includes remarks made by the permit applicant to the Authority Having Jurisdiction.

F. DOMESTIC HOT WATER EQUIPMENT

This table is used to demonstrate compliance with mandatory equipment requirements in §110.1 and §110.3. Compliance with prescriptive requirements in §140.5(c) / §170.2(d) must also be demonstrated and with §141.0 / §180.1/ §180.2 for addition and alteration scopes.

Equipment Schedule: Water Heating Efficiency and Standby Loss

01		02		03		04		
System Name	EWH-1	Space type	Nonresidential	Exception to §140.5(c)/§170.2(d)2B		Exceptions Do Not Apply	Capacity-weighted Average Efficiency %	0
05	06	07	08	09	10	11	12	13
Name or Item Tag	Quantity	System Status	Equipment Type	Volume (gal)	Rated Input Capacity (Btu/h)	Rated Efficiency	Minimum Efficiency Required	Maximum Standby Loss
EWH-1	1	New/ Addition	Electric Storage	199.9		0.98	Must meet Federal Minimum Requirements	If applicable, must meet Federal Minimum Requirements

[1] *FOOTNOTE: In systems >= 1MMBtu/h with multiple units, gas water heaters with input capacity > 100,000 Btu/h may meet 90% Et requirements via an input capacity-weighted average.*
[2] *FOOTNOTE: Compliant equipment may be found in the Modernized Appliance Efficiency Database System (MAEDBS) on the Energy Commission website: https://cacertappliances.energy.ca.gov/Pages/Search/AdvancedSearch.aspx*

System Name	EWH-1			
	Yes	No	Not Applicable	Requirement
18	☐	☐	☒	Unfired storage tank insulation shall have Internal + External >=R-16 OR External >=R-3.5. Label required per §110.3(c)3
19	☐	☐	☒	New state buildings 60% of energy for service water heating from site solar energy or recovered energy per §110.3(c)5
20	☐	☐	☒	Isolation valves for instantaneous water heater with input rating >6.8 kBTUH or 2 kW has been specified per §110.3(c)6
21	☐	☐	☒	School buildings < 25,000 ft² and < 4 stories must install a heat pump water heating system per §140.5(a)1. Water heating systems serving an individual bathroom space may be an instantaneous electric water heater.

STATE OF CALIFORNIA
Domestic Water Heating System
CALIFORNIA ENERGY COMMISSION

CERTIFICATE OF COMPLIANCE			NRCC-PLB-E
Project Name:	VENTURA FIRE DEPARTMENT	**Report Page:**	**(Page 3 of 7)**
		Date Prepared:	2026-03-31T07:03:29-04:00

DOMESTIC HOT WATER DISTRIBUTION SYSTEM

This table is used to demonstrate compliance for nonresidential occupancies with distribution requirements in §120.3 and §140.5. For multifamily and hotel/motel occupancies, compliance is demonstrated with requirements §110.3(c), §160.4, §170.2(d).

Recirculation Loops in Central Systems Serving Dwelling Units, Hotel/Motel Guest Rooms, or Nonresidential Spaces - §110.3, §170.2(d)2

System Name	EWH-1		
	Yes	No	Requirement
01	○	●	Air release valve or vertical pump installation per §110.3(c)4A
02	○	●	Check valve or similar located between recirculation pump and water heating equipment to prevent backflow per §110.3(c)4B
03	○	●	Hose bibb installed between pump and equipment and isolation valve between hose bibb and equipment per §110.3(c)4C
04	○	●	Isolation valves on both sides of the pump per §110.3(c)4D
05	○	●	Cold water and recirculation loop piping shall not be connected to the hot water storage tank drain port per §110.3(c)4E
06	○	●	Check valve installed on cold water supply between hot water system and next closest tee on cold water supply per §110.3(c)4F
07	○	●	DWELLING UNITS ONLY: For heat pump water heating systems, the hot water return from the recirculation loop shall connect to a recirculation loop tank and shall not directly connect to the primary heat pump water heater inlet or the primary thermal storage tanks per §170.2(d)2Aii.
08	○	●	DWELLING UNITS ONLY: For heat pump water heating systems, the fuel source for the recirculation loop tank shall be electricity per §170.2(d)2Aii.
09	○	●	DWELLING UNITS ONLY: The recirculation loop tank temperature setpoint shall be at least 10°F lower than the primary thermal storage tank temperature setpoint - §170.2(d)2Av
10	○	●	DWELLING UNITS ONLY: All hot water distribution piping shall be sized in accordance with the California Plumbing Code Appendix M per §170.2(d)2C.
11	○	●	DWELLING UNITS ONLY:A recirculation system with mechanical or digital thermostatic master mixing valve on each distribution supply and return loop and meet the requirements in Reference Appendix RA4.4, unless building has ≤ 8 dwelling units, per §170.2(d)2D.
12	○	●	DWELLING UNITS ONLY: Insulation for hot water pipes shall be field verified as specifid in Reference Appendix RA3.6.3 per §170.2(d)2E.

STATE OF CALIFORNIA
Domestic Water Heating System
CALIFORNIA ENERGY COMMISSION

CERTIFICATE OF COMPLIANCE			NRCC-PLB-E
Project Name:	VENTURA FIRE DEPARTMENT	**Report Page:**	**(Page 4 of 7)**
		Date Prepared:	2026-03-31T07:03:29-04:00

DOMESTIC HOT WATER DISTRIBUTION SYSTEM

Mandatory Pipe Insulation All Occupancies - §120.3, §160.4

System Name	EWH-1		
	Yes	Not Applicable	Requirement
16	○	●	For systems serving dwelling units, pipe insulation must meet the minimum insulation requirements in Table 160.4-A (see blow) except: • Piping that penetrates framing members shall not be required to have pipe insulation for the distance of the framing penetration. Piping that penetrates metal framing shall use grommets, plugs, wrapping or other insulating material to assure that no contact is made with the metal framing. Insulation shall abut securely against all framing members • Piping installed in interior or exterior walls shall not be required to have pipe insulation if all of the requirements are met for compliance with Quality Insulation Installation (QII) as specified in the Reference Residential Appendix RA3.5. • Piping surrounded with a minimum of 1 inch of wall insulation, 2 inches of crawlspace insulation, or 4 inches of attic insulation, shall not be required to have pipe insulation.
17	○	●	For systems serving nonresidential spaces, pipe insulation for the following applications is specified to comply with Table 120.3-A1 or Table 120.3-A2 (see below) per §120.3: • Recirculating system piping, including supply and return piping of the water heater • The first 8 ft of hot and cold outlet piping, including between storage tank and heat trap, for a nonrecirculating storage system • Pipes that are externally heated
18	●	○	Per §120.3(b)/ §160.4(f), pipe and appurtenance insulation shall be protected from damage, including that due to sunlight, moisture, equipment maintenance, and wind. Insulation exposed to weather shall be installed with a cover suitable for outdoor service. Pipe insulation buried below grade must be installed in a water proof and non-crushable casing or sleeve.

TABLE 160.4-A PIPE INSULATION THICKNESS

Fluid Temperature Range (°F)	Conductivity Range (Btu-in per hour per ft² per °F)	Insulation Mean Rating Temp (°F)	Nominal Pipe Diameter (in)			
			< 1	1 to < 1.5	1.5 to < 4	1.5 to < 4 Multifamily & Hotel/Motel
			Minimum Insulation Required			
105-140	0.22 - 0.28	100	1.0 in or R-7.7	1.5 in or R-12.5	1.5 in or R-11	2.0 in or R-16

DOMESTIC HOT WATER CONTROLS - §110.3, §120.9, §160.4(d), §170.2(d), §180.1(b)3

This table is used to demonstrate compliance with control requirements in §110.3 for all occupancies. For nonresidential occupancies, compliance is demonstrated with requirements in §120.9. For multifamily residential and hotel/motel occupancies, compliance is also demonstrated with requirements in §160.4(d) / §170.2(d).

STATE OF CALIFORNIA
Domestic Water Heating System
CALIFORNIA ENERGY COMMISSION

CERTIFICATE OF COMPLIANCE			NRCC-PLB-E
Project Name:	VENTURA FIRE DEPARTMENT	**Report Page:**	**(Page 5 of 7)**
		Date Prepared:	2026-03-31T07:03:29-04:00

System Name	EWH-1		
	Yes	Not Applicable	Requirement
01	☒	☐	Construction documents require manufacturer certification that service water-heating systems are equipped with automatic temperature controls capable of adjusting temperature settings per §110.3(a).
02	☐	☒	Systems with capacity > 167,000 BTUH equipped with outlet temperature controls per §110.3(c)1 unless covered by California Plumbing Code 613.0.
03	☒	☐	Controls for circulating pumps or electrical heat trace systems are capable of automatically turning off the system per §110.3(c)2 unless systems serves healthcare facility.
04	☐	☒	For recirculation systems serving multiple dwelling units, design includes a mechanical or digital thermostatic master mixing valve on each distribution supply and return loop per §170.2(d) or §180.1(b)3 for additions.
05	☐	☒	For recirculation systems serving individual dwelling units, design includes manual on/off controls as specified in Reference Appendix RA4.4.9 per §170.2(d).
06	☐	☒	Combustion air positive shut-off shall be provided per §120.9(a) & §160.4(d) on all newly installed commercial boilers as follows: • Boilers with input capacity >= 2.5 MMBtu/h, in which the boiler is designed to operate with a nonpositive vent static pressure • Boilers where one stack serves two or more boilers with a total combined input capacity per stack of 2.5 MMBtu/h.
07	☐	☒	Boiler combustion air fans with motor >= 10 hp shall meet one of the following for newly installed boilers per §120.9(b) & §160.4(d)2: • The fan motor shall be driven by a variable speed drive OR • The fan motor shall include controls that limit the fan motor demand to <=30% of the total design wattage at 50% of the design air volume.
08	☐	☒	Newly installed boilers with an input capacity (d:gte/) 5MMBtu/h and a steady state full-load combustion efficiency < 90% shall maintain excess (stack-gas) oxygen concentrations <= 5% by volume on a dry basis over firing rates of 20-100%. Combustion air volume shall be controlled with respect to firing rate or flue gas oxygen concentration. Use of a common gas and combustion air control linkage or jack shaft is prohibited per §120.9(c) & §160.4(d)3.

DECLARATION OF REQUIRED CERTIFICATES OF INSTALLATION

Selections have been made based on information provided in this document. If any selection have been changed by permit applicant, an explanation should be included in Table E. Additional Remarks. These documents must be provided to the building inspector during construction and can be found online

Form/Title
NRCI-PLB-E - Must be submitted for all buildings

STATE OF CALIFORNIA
Domestic Water Heating System
CALIFORNIA ENERGY COMMISSION

CERTIFICATE OF COMPLIANCE			NRCC-PLB-E
Project Name:	VENTURA FIRE DEPARTMENT	**Report Page:**	**(Page 6 of 7)**
		Date Prepared:	2026-03-31T07:03:29-04:00

DECLARATION OF REQUIRED CERTIFICATES OF ACCEPTANCE

There are no forms required for this project.

DECLARATION OF REQUIRED CERTIFICATES OF VERIFICATION

There are no forms required for this project.

STATE OF CALIFORNIA
Domestic Water Heating System
CALIFORNIA ENERGY COMMISSION

CERTIFICATE OF COMPLIANCE			NRCC-PLB-E
Project Name:	VENTURA FIRE DEPARTMENT	**Report Page:**	**(Page 7 of 7)**
Project Address:	2269 ALESSANDRO DR, VENTURA, CA 93001	**Date Prepared:**	2026-03-31T07:03:29-04:00

DOCUMENTATION AUTHOR'S DECLARATION STATEMENT

I certify that this Certificate of Compliance documentation is accurate and complete.

Documentation Author Name:	DONAL SHAMON	Documentation Author Signature:	
Company:	PIVOT ENGINEERING CONSULTANTS	Signature Date:	2026-03-31
Address:	11226 EVERGREEN LOOP	CEA/AEA/ECC Certification Identification (if applicable):	
City/State/Zip:	CORONA, CA 92883	Phone:	(909) 610 5364

RESPONSIBLE PERSON'S DECLARATION STATEMENT

I certify the following under penalty of perjury, under the laws of the State of California:

1. The information provided on this Certificate of Compliance is true and correct.
2. I am eligible under Division 3 of the Business and Professions Code to accept responsibility for the building design or system design identified on this Certificate of Compliance (responsible designer)
3. The energy features and performance specifications, materials, components, and manufactured devices for the building design or system design identified on this Certificate of Compliance conform to the requirements of Title 24, Part 1 and Part 6 of the California Code of Regulations.
4. The building design features or system design features identified on this Certificate of Compliance are consistent with the information provided on other applicable compliance documents, worksheets, calculations, plans and specifications submitted to the enforcement agency for approval with this building permit application.
5. I will ensure that a completed signed copy of this Certificate of Compliance shall be made available with the building permit(s) issued for the building, and made available to the enforcement agency for all applicable inspections. I understand that a completed signed copy of this Certificate of Compliance is required to be included with the documentation the builder provides to the building owner at occupancy.

Responsible Person Name:	DONAL SHAMON	Responsible Person Signature:	
Responsible Person Scope:			
Company:	PIVOT ENGINEERING CONSULTANTS	Date Signed:	2026-03-31
Address:	11226 EVERGREEN LOOP	License:	38411
City/State/Zip:	CORONA, CA 92883	Phone:	(909) 610 5364

GLOBAL MODULAR Incorporated
AURORA DESIGNS
MODTECH Designs
MODULAR STRUCTURES INTERNATIONAL INC. DESIGNS
CONTRACTORS LICENSE #837357

NORTHERN CALIFORNIA DIVISON
450 COMMERCE AVE
ATWATER, CA 95301
PHONE: (209) 676–8029
FAX: (209) 676–8067
WEBSITE: WWW.GDVI.NET

SOUTHERN CALIFORNIA DIVISON
1860 CHICAGO AVE., SUITE I–7
RIVERSIDE, CA 92507
PHONE: (951) 686–3633
FAX: (951) 686–3666
WEBSITE: WWW.GDVI.NET

THIS DRAWING AND THE MATERIAL CONTAINED THERE-IN ARE THE PROPERTY OF GLOBAL MODULAR, INC. AND SHALL NOT BE REPRODUCED, COPED OR OTHERWISE DISPOSED OF DIRECTLY OR INDIRECTLY AND SHALL NOT BE USED IN WHOLE OR IN PART TO ASSIST IN THE MAKING OF OR FOR THE PURPOSE OF FURNISHING ANY INFORMATION FOR THE MAKING OF DRAWINGS, PRINTS APPARATUS OR PARTS THEREOF WITHOUT THE FULL KNOWLEDGE AND WRITTEN CONSENT OF GLOBAL MODULAR, INC. ALL PATENTABLE MATERIAL CONTAINED HEREIN AND ORIGINATING WITH GLOBAL MODULAR, INC, SHALL BE THE PROPERTY OF GLOBAL MODULAR, INC.

PROJECT NAME:

48x60
VENTURA
FIRE DEPARTMENT
2269 ALESSANDRO DR, VENTURA, CA 93001

PUBLIC WORKS DEPARTMENT ENGINEERING DIVISION
CITY OF SAN BUENAVENTURA

PRINCIPAL ENGINEER — DATE: 5 May 2026
CITY ENGINEER — DATE: 5/7/2026

ARCHITECT OF RECORD

MFR. STRUCTURAL ENGINEER OF RECORD

MFR. PROJECT SPECIFIC PROFESSIONAL OF RECORD

SHEET TITLE:

TITLE 24 - PLUMBING

REVISIONS
1 -
2 -
3 -
4 -

PROJECT NO.:	00-0000
DRAWN BY:	00
SCALE:	AS NOTED
DATE:	00-00-00

SHEET NUMBER
P7.0
SPEC NO. 2025-010 DWG. NO. 2025-D-010

FOR REFERENCE ONLY

BUILDING CODES AND STANDARDS

2007 BUILDING STANDARDS ADMINISTRATIVE CODE, PART 1, TITLE 24 CCR
2007 CALIFORNIA BUILDING CODE (CBC), PART 2, TITLE 24 CCR
(2006 INTERNATIONAL BUILDING CODE VOLUMES 1–3 AND 2007 CALIFORNIA AMENDMENTS)
2007 CALIFORNIA ELECTRICAL CODE (CEC), PART 3, TITLE 24 CCR
(2005 NATIONAL ELECTRICAL CODE AND 2007 CALIFORNIA AMENDMENTS)
2007 CALIFORNIA MECHANICAL CODE (CMC) PART 4, TITLE 24 CCR
(2006 UNIFORM MECHANICAL CODE AND 2007 CALIFORNIA AMENDMENTS)
2007 CALIFORNIA PLUMBING CODE (CPC) PART 5, TITLE 24 CCR
(2006 UNIFORM PLUMBING CODE AND 2007 CALIFORNIA AMENDMENTS)
2007 CALIFORNIA ENERGY CODE, PART 6, TITLE 24 CCR
2004 ASME A17.1 SAFETY CODE FOR ELEVATORS AND ESCALATORS
2007 CALIFORNIA FIRE CODE, PART 9, TITLE 24 CCR
(2006 INTERNATIONAL FIRE CODE AND 2007 CALIFORNIA AMENDMENTS)
2007 CALIFORNIA REFERENCED STANDARDS, PART 12, TITLE 24 CCR
TITLE 19 CCR, PUBLIC SAFETY, STATE FIRE MARSHAL REGULATIONS

NFPA 13	AUTOMATIC SPRINKLER SYSTEMS	2002 EDITION
NFPA 14	STANDPIPE SYSTEMS	2003 EDITION
NFPA 17	DRY CHEMICAL EXTINGUISHING SYSTEMS	2002 EDITION
NFPA 17a	WET CHEMICAL SYSTEMS	2002 EDITION
NFPA 20	STATIONARY PUMPS	2003 EDITION
NFPA 24	PRIVATE FIRE MAINS	2002 EDITION
NFPA 72	NATIONAL FIRE ALARM CODE (CALIFORNIA AMENDED)	2002 EDITION
(NOTE: SEE UL STANDARD 1971 FOR "VISUAL DEVICES")		
NFPA 253	CRITICAL RADIANT FLUX OF FLOOR COVERING SYSTEMS	2006 EDITION
NFPA 2001	CLEAN AGENT FIRE EXTINGUISHING SYSTEMS	2004 EDITION

REFERENCE CODE SECTION FOR NFPA STANDARDS–2007 CBC (SFM) CHAPTER 35

CITY OF VENTURA FIRE STATION
2269 ALESSANDRO DR, VENTURA, CA 93001
MANUFACTURED MODULAR BUILDING
(1) 24' x 40'

SERIAL NO. 2BE3265 AND 2B3266

DRAWING INDEX

SHEET NO.	ARCHITECTURAL
A0.0	TITLE SHEET
A0.3	FINISH SCHEDULES
A1.1	FLOOR PLAN 24'x40'
A2.1	REFLECTED CEILING PLAN 24'x40'
A4.1	INTERIOR ELEVATIONS 24'x40'
A5.1	EXTERIOR ELEVATIONS 24'x40'–WOOD SIDING
	ELECTRICAL
E1.0	ELECTRICAL PLAN POWER 24'x40'
E2.0	ELECTRICAL PLAN LIGHTING 24'x40'
	MECHANICAL
M0.1	MECHANICAL SCHEDULE – NOTES & DETAILS
M1.0	MECHANICAL PLAN WALL MOUNT 24'x40'
	FIRE SPRINKLERS
FS–1	FIRE SPRINKLERS COVER SHEET
FS–2	MODULAR BLDG–FIRE SPRINKLER LAYOUT

PROJECT SPECIFIC STATE AGENCY APPROVAL

GLOBAL MODULAR incorporated
AURORA DESIGNS MODTECH Designs MODULAR STRUCTURES INTERNATIONAL, INC DESIGNS

CONTRACTORS LICENSE #837357

NORTHERN CALIFORNIA DIVISON
450 COMMERCE AVE
ATWATER, CA 95301
PHONE: (209) 676–8029
FAX: (209) 676–8067
WEBSITE: WWW.GDVI.NET

SOUTHERN CALIFORNIA DIVISON
1860 CHICAGO AVE., SUITE I–7
RIVERSIDE, CA 92507
PHONE: (951) 686–3633
FAX: (951) 686–3666
WEBSITE: WWW.GDVI.NET

THIS DRAWING AND THE MATERIAL CONTAINED THERE-IN ARE THE PROPERTY OF GLOBAL MODULAR, INC. AND SHALL NOT BE REPRODUCED, COPED OR OTHERWISE DISPOSED OF DIRECTLY OR INDIRECTLY AND SHALL NOT BE USED IN WHOLE OR IN PART TO ASSIST IN THE MAKING OF OR FOR THE PURPOSE OF FURNISHING ANY INFORMATION FOR THE MAKING OF DRAWINGS, PRINTS APPARATUS OR PARTS THEREOF WITHOUT THE FULL KNOWLEDGE AND WRITTEN CONSENT OF GLOBAL MODULAR, INC. ALL PATENTABLE MATERIAL CONTAINED HEREIN AND ORIGINATING WITH GLOBAL MODULAR, INC, SHALL BE THE PROPERTY OF GLOBAL MODULAR, INC.

PROJECT NAME:
24x40
GYM VENTURA
FIRE DEPARTMENT
2269 ALESSANDRO DR, VENTURA, CA 93001

SHEET TITLE:
TITLE SHEET

PUBLIC WORKS DEPARTMENT ENGINEERING DIVISION
CITY OF SAN BUENAVENTURA

PRINCIPAL ENGINEER — DATE: 5 May 2026

CITY ENGINEER — DATE: 5/7/2026

MFR. STRUCTURAL ENGINEER OF RECORD

MFR. PROJECT SPECIFIC PROFESSIONAL OF RECORD

ARCHITECT OF RECORD

REVISIONS
1 -
2 -
3 -
4 -

PROJECT NO.:
DRAWN BY:
SCALE: AS NOTED
DATE:

SHEET NUMBER
A0.0

SPEC NO. 2025-010 DWG. NO. 2025-D-010

FOR REFERENCE ONLY

HARDWARE GROUP (ENTRY/OFFICE) 1		
QTY.	ITEM	DESCRIPTION
1	LOCK SET	'FALCON': T 511 DANE LEVER 626
1	KEYING	FALCON TEMPORARY CORE
3	HINGES	'MCKINNEY': T2714 4.5"x4.5" NRP A5133
1	CLOSER	'NORTON': 8301 SLIM COVER (5 LB OPERATING PUSH/PULL PRESSURE)
1	THRESHOLD	'PEMKO': 271A 36"
1	DOOR BOTTOM	'PEMKO': 216AV 36"
1	WEATHER-STRIP	'PEMKO': 2891AS 36"x84"
1	KICK PLATE	'ROCKWOOD': K1050 8"x34"
1	DOOR STOP	'ROCKWOOD': 443 FLOOR STOP (LOCATED 4" FROM WALL)

DOOR SCHEDULE											
#	DOOR TYPE	DOOR WIDTH	DOOR HEIGHT	HARDWARE GROUP	DOOR MATERIAL	DOOR GAUGE	DOOR FRAME	FRAME GAUGE	GLAZING	FIRE RATING	REMARKS
100	A	3'-0"	7'-0"	1	STL	18	KD	16	–	–	–
101	B	6'-0"	6'-8"	–	MF	–	MF	–	YES	–	SLIDING PATIO DOOR

DOOR MATERIAL LEGEND
STL: STEEL DOOR-HOLLOW CORE
MF: PER MANUFACTURER

DOOR FRAME LEGEND
KD: KNOCK DOWN-HOLLOW METAL
MF: PER MANUFACTURER

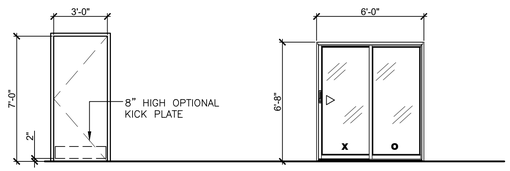

DOOR TYPE A DOOR TYPE B

STANDARD DOOR TYPE

ROOM FINISH SCHEDULE									
ROOM NAME	FLOOR FINISH	BASE	WALLS				CEILING FINISH	HEIGHT CEILING	REMARKS
			ELEV. 1	ELEV. 2	ELEV. 3	ELEV. 4			
GYM	VCT	4TB	FRP	FRP	FRP	FRP	AT	8'-6"	–

FLOOR FINISH LEGEND
VCT: VINYL COMPOSITION TILE
4TB: 4" TOP SET BASE

WALL FINISH LEGEND
FRP: 1/8" FIBERBOARD REINFORCED PANELS OVER 1/2" MOISTURE RESISTANT GYP BOARD

CEILING FINISH LEGEND
AT: ACOUSTICAL TILE IN HEAVY DUTY T-BAR GRID

WINDOW SCHEDULE							
*	WINDOW WIDTH	WINDOW HEIGHT	WINDOW FRAME	WINDOW FINISH	WINDOW GLAZING	FIRE RATING	REMARKS
A	8'-0"	4'-0"	AL	CA	1&4	–	SCREENED

WINDOW FRAME LEGEND
AL: ALUMINUM

WINDOW FINISHES
CA: CLEAR ANODIZED
BA: BRONZE ANODIZED
PNT: PAINTED

GLAZING TYPES
1: 46% TEMPERED GRAYLITE
2: 14% TEMPERED GRAYLITE
3: CLEAR TEMPERED
4: DUAL PANE
5: SINGLE PANE

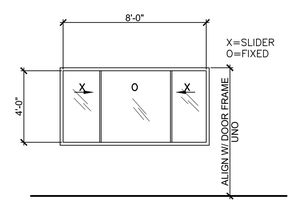

WINDOW TYPE A

WINDOW TYPE

PROJECT SPECIFIC STATE AGENCY APPROVAL

GLOBAL MODULAR incorporated
AURORA DESIGNS MODTECH Designs MODULAR STRUCTURES INTERNATIONAL, INC. DESIGNS

CONTRACTORS LICENSE #837357

NORTHERN CALIFORNIA DIVISON
450 COMMERCE AVE
ATWATER, CA 95301
PHONE: (209) 676-8029
FAX: (209) 676-8067
WEBSITE: WWW.GDVI.NET

SOUTHERN CALIFORNIA DIVISON
1860 CHICAGO AVE., SUITE I-7
RIVERSIDE, CA 92507
PHONE: (951) 686-3633
FAX: (951) 686-3666
WEBSITE: WWW.GDVI.NET

THIS DRAWING AND THE MATERIAL CONTAINED THERE-IN ARE THE PROPERTY OF GLOBAL MODULAR, INC. AND SHALL NOT BE REPRODUCED, COPED OR OTHERWISE DISPOSED OF DIRECTLY OR INDIRECTLY AND SHALL NOT BE USED IN WHOLE OR IN PART TO ASSIST IN THE MAKING OF OR FOR THE PURPOSE OF FURNISHING ANY INFORMATION FOR THE MAKING OF DRAWINGS, PRINTS APPARATUS OR PARTS THEREOF WITHOUT THE FULL KNOWLEDGE AND WRITTEN CONSENT OF GLOBAL MODULAR, INC. ALL PATENTABLE MATERIAL CONTAINED HEREIN AND ORIGINATING WITH GLOBAL MODULAR, INC, SHALL BE THE PROPERTY OF GLOBAL MODULAR, INC.

PROJECT NAME:
24x40
GYM VENTURA
FIRE DEPARTMENT
2269 ALESSANDRO DR, VENTURA, CA 93001

SHEET TITLE:
FINISH SCHEDULES

PUBLIC WORKS DEPARTMENT ENGINEERING DIVISION
CITY OF SAN BUENAVENTURA
PRINCIPAL ENGINEER — DATE: 5 May 2026
CITY ENGINEER — DATE: 5/7/2026
MFR. STRUCTURAL ENGINEER OF RECORD

MFR. PROJECT SPECIFIC PROFESSIONAL OF RECORD

ARCHITECT OF RECORD

REVISIONS
1 -
2 -
3 -
4 -

PROJECT NO.:
DRAWN BY:
SCALE: AS NOTED
DATE:

SHEET NUMBER
A0.3
SPEC NO. 2025-010 DWG. NO. 2025-D-010

FOR REFERENCE ONLY

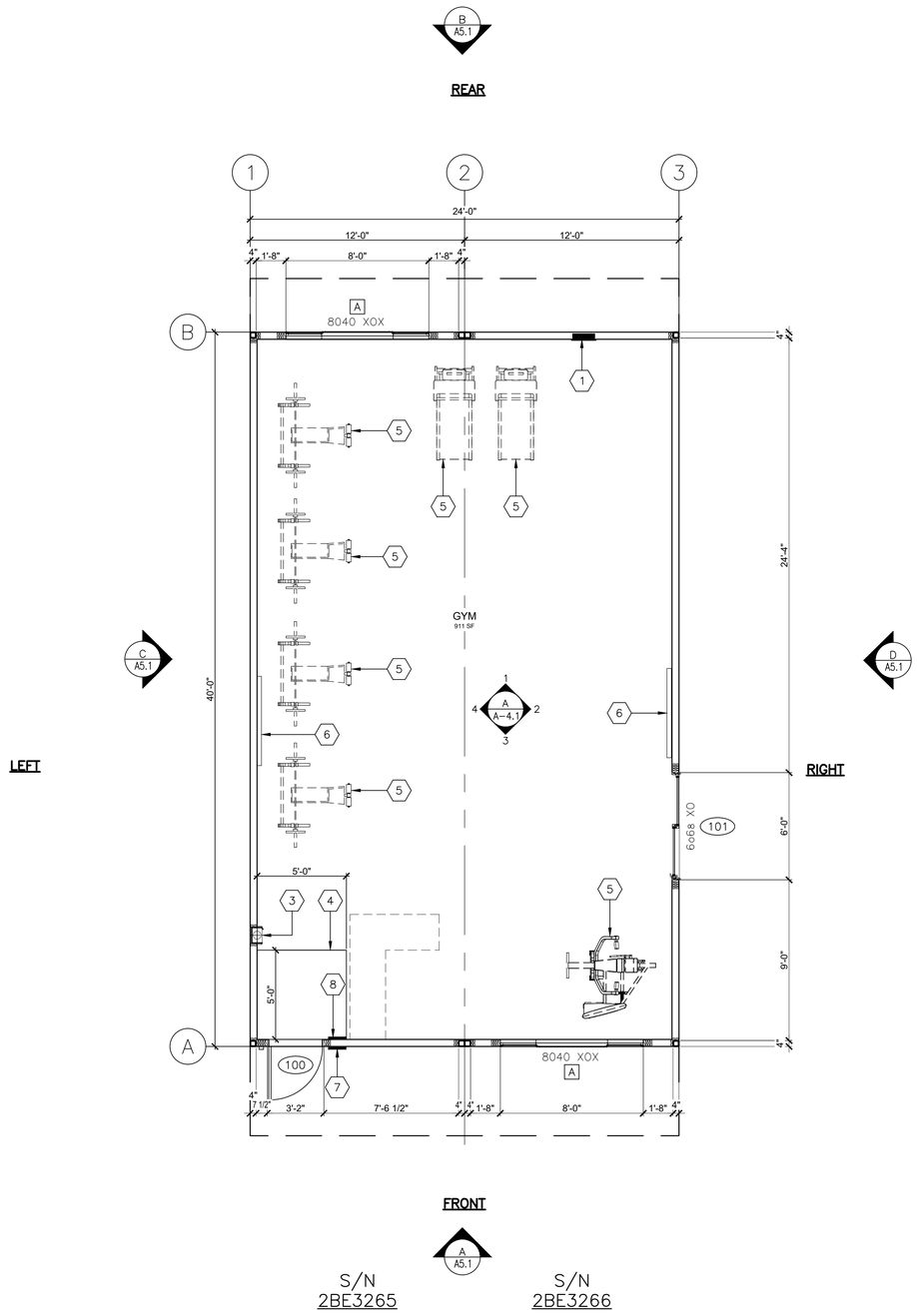

FLOOR PLAN 24'x40'

SCALE: 1/4" = 1'-0"

KEY NOTES

1. ELECTRICAL PANEL (SEE ELECTRICAL SHEETS)
2. AC UNIT (SEE MECHANICAL SHEETS)
3. FIRE EXTINGUISHER–5 LB DRY CHEMICAL W/ 2–A:20–B:C UL RATING +48" AFF TO TOP OF HANDLE IN SEMI–RECESSED CABINET WITH 4" MAX PROJECTION, TYP.
4. PRIMARY ENTRANCES SHALL REQUIRE A MIN 48" OVERHANG OR AWNING OR RECESSED AREA OR OTHER APPROPRIATE METHOD INCLUDING A 60" X 60" MIN FLOOR AREA USING VCT OR SHEET VINYL WHEN USING CARPET FLOORING PER CALGREEN SECTION 5.407.2.2.1
5. GYM EQUIPMENT (BY OTHERS)
6. 55"–65" TV (BY OTHERS)
7. ROOM SIGNAGE
8. EXIT SIGNAGE

OCCUPANT LOAD FORMULA

BUILDING SQUARE FOOTAGE	960 SQ FT
OCCUPANT NET PER TABLE 1004.5	50
MAXIMUM OCCUPANTS	19

GENERAL NOTES

1. SIGNAGE REQUIRED PER APPLICABLE CODES LISTED ON COVER SHEET PROVIDED AND INSTALLED BY OWNER ON SITE.

PROJECT SPECIFIC STATE AGENCY APPROVAL

GLOBAL MODULAR incorporated

AURORA DESIGNS · MODTECH Designs · MODULAR STRUCTURES INTERNATIONAL, INC. DESIGNS

CONTRACTORS LICENSE #837357

NORTHERN CALIFORNIA DIVISON
450 COMMERCE AVE
ATWATER, CA 95301
PHONE: (209) 676–8029
FAX: (209) 676–8067
WEBSITE: WWW.GDVI.NET

SOUTHERN CALIFORNIA DIVISON
1860 CHICAGO AVE., SUITE I–7
RIVERSIDE, CA 92507
PHONE: (951) 686–3633
FAX: (951) 686–3666
WEBSITE: WWW.GDVI.NET

THIS DRAWING AND THE MATERIAL CONTAINED THERE-IN ARE THE PROPERTY OF GLOBAL MODULAR, INC. AND SHALL NOT BE REPRODUCED, COPED OR OTHERWISE DISPOSED OF DIRECTLY OR INDIRECTLY AND SHALL NOT BE USED IN WHOLE OR IN PART TO ASSIST IN THE MAKING OF OR FOR THE PURPOSE OF FURNISHING ANY INFORMATION FOR THE MAKING OF DRAWINGS, PRINTS APPARATUS OR PARTS THEREOF WITHOUT THE FULL KNOWLEDGE AND WRITTEN CONSENT OF GLOBAL MODULAR, INC. ALL PATENTABLE MATERIAL CONTAINED HEREIN AND ORIGINATING WITH GLOBAL MODULAR, INC, SHALL BE THE PROPERTY OF GLOBAL MODULAR, INC.

PROJECT NAME:

24x40
GYM VENTURA
FIRE DEPARTMENT
2269 ALESSANDRO DR, VENTURA, CA 93001

SHEET TITLE:

FLOOR PLAN
24'X40'

PUBLIC WORKS DEPARTMENT ENGINEERING DIVISION
CITY OF SAN BUENAVENTURA

PRINCIPAL ENGINEER — DATE: 5 May 2026

CITY ENGINEER — DATE: 5/7/2026

MFR. STRUCTURAL ENGINEER OF RECORD

MFR. PROJECT SPECIFIC PROFESSIONAL OF RECORD

ARCHITECT OF RECORD

REVISIONS
1 -
2 -
3 -
4 -

PROJECT NO.:
DRAWN BY:
SCALE: AS NOTED
DATE:

SHEET NUMBER

A1.1

SPEC NO. 2025-010 DWG. NO. 2025-D-010

REAR

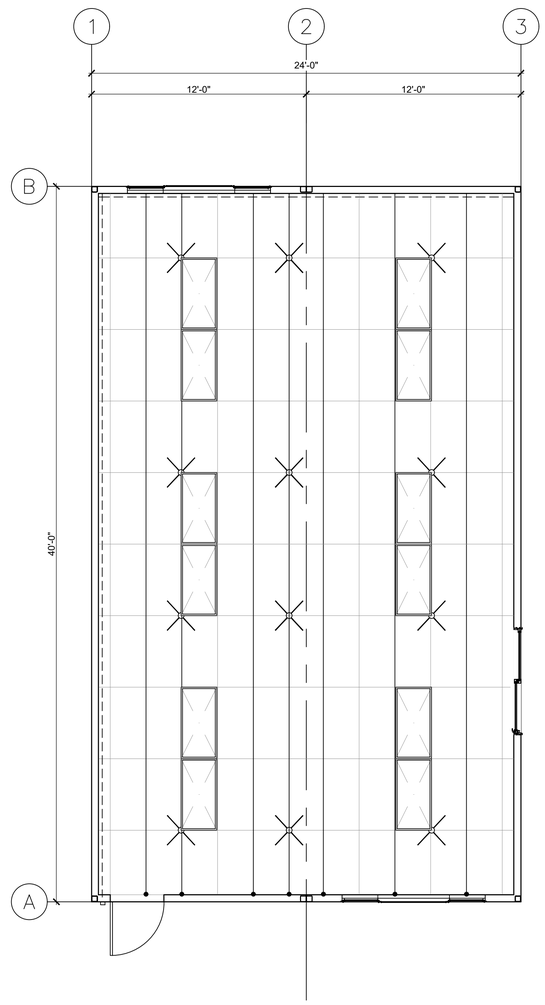

LEFT

RIGHT

FRONT

REFLECTED CEILING PLAN

SCALE: 1/4" = 1'-0"

LEGEND

SUPPLY AIR DIFFUSERS NOT SHOWN FOR CLARITY (SEE MECHANICAL PLAN)

2'x4' FLUORESCENT DROP-IN FIXTURE (SEE ELECTRICAL PLAN)

4-WAY SPLAY WIRE SYSTEM

48"
24"

T-GRID CEILING

INDICATES FREE SIDE. ALL OTHER SIDES SHALL BE FIXED

INDICATES MAIN RUNNER LOCATIONS

PROJECT SPECIFIC STATE AGENCY APPROVAL

GLOBAL MODULAR incorporated

AURORA DESIGNS · MODTECH Designs · MODULAR STRUCTURES INTERNATIONAL, INC. DESIGNS

CONTRACTORS LICENSE #837357

NORTHERN CALIFORNIA DIVISON
450 COMMERCE AVE
ATWATER, CA 95301
PHONE: (209) 676-8029
FAX: (209) 676-8067
WEBSITE: WWW.GDVI.NET

SOUTHERN CALIFORNIA DIVISON
1860 CHICAGO AVE., SUITE I-7
RIVERSIDE, CA 92507
PHONE: (951) 686-3633
FAX: (951) 686-3666
WEBSITE: WWW.GDVI.NET

THIS DRAWING AND THE MATERIAL CONTAINED THERE-IN ARE THE PROPERTY OF GLOBAL MODULAR, INC. AND SHALL NOT BE REPRODUCED, COPED OR OTHERWISE DISPOSED OF DIRECTLY OR INDIRECTLY AND SHALL NOT BE USED IN WHOLE OR IN PART TO ASSIST IN THE MAKING OF OR FOR THE PURPOSE OF FURNISHING ANY INFORMATION FOR THE MAKING OF DRAWINGS, PRINTS APPARATUS OR PARTS THEREOF WITHOUT THE FULL KNOWLEDGE AND WRITTEN CONSENT OF GLOBAL MODULAR, INC. ALL REPRODUCTIONS, DUPLICATES OR COPIES HEREOF MUST BE ACCOMPANIED WITH A NOTICE TO THE EFFECT THAT THE SAME IS THE PROPERTY OF GLOBAL MODULAR, INC.

REFLECTED CEILING PLAN
24'X40'

PROJECT NAME:
24x40
GYM VENTURA
FIRE DEPARTMENT
2269 ALESSANDRO DR, VENTURA, CA 93001

SHEET TITLE:

PUBLIC WORKS DEPARTMENT ENGINEERING DIVISION
CITY OF SAN BUENAVENTURA

PRINCIPAL ENGINEER — DATE: 5 May 2026

CITY ENGINEER — DATE: 5/7/2026

MFR. STRUCTURAL ENGINEER OF RECORD

MFR. PROJECT SPECIFIC PROFESSIONAL OF RECORD

ARCHITECT OF RECORD

REVISIONS
1 -
2 -
3 -
4 -

PROJECT NO.:
DRAWN BY:
SCALE: AS NOTED
DATE:

SHEET NUMBER
A2.1

SPEC NO. 2025-010 DWG. NO. 2025-D-010

FOR REFERENCE ONLY

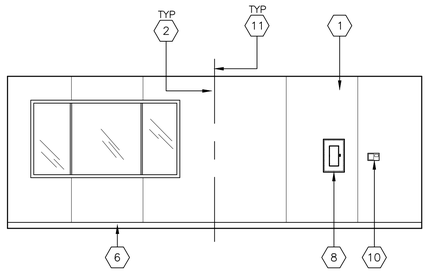

ELEVATION 1

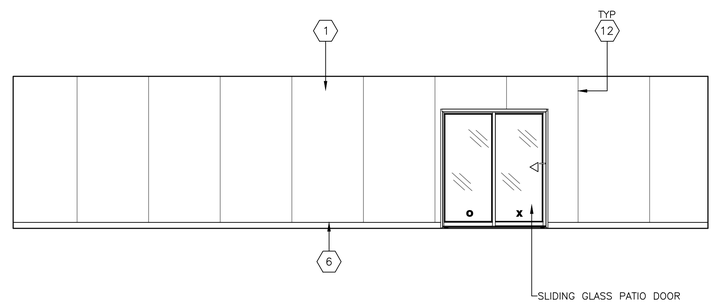

ELEVATION 2

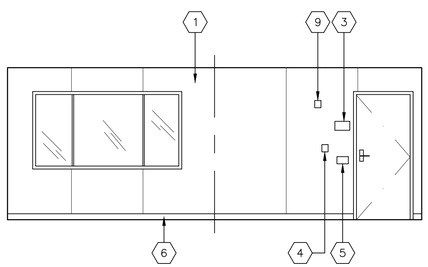

ELEVATION 3

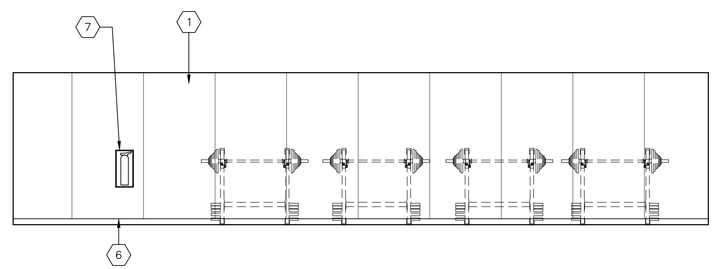

ELEVATION 4

INTERIOR ELEVATIONS

SCALE: 1/4" = 1'-0"

A

KEY NOTES

1. TYPICAL INTERIOR FINISH SEE ROOM FINISH SCHEDULE SHEET A0.3
2. MODULAR JOINT
3. TACTILE EXIT SIGNAGE (SEE SIGNAGE SHEET)
4. FIRE ALARM PULL STATION (SEE ELECTRICAL PLAN)
5. OCCUPANCY SENSOR OR LIGHT SWITCH (SEE ELECTRICAL PLAN)
6. TOP SET BASE TYPICAL (SEE FINISH SCHEDULE)
7. FIRE EXTINGUISHER IN SEMI-RECESSED CABINET
8. ELECTRICAL PANEL +48" TO HANDLE
9. HORN/STROBE (SEE ELECTRICAL PLAN)
10. THERMOSTAT (SEE MECHANICAL PLAN)
11. MODULAR JOINT
12. INTERIOR FINISH SEAM

PROJECT SPECIFIC STATE AGENCY APPROVAL

GLOBAL MODULAR incorporated

AURORA DESIGNS · MODTECH Designs · MODULAR STRUCTURES INTERNATIONAL, INC. DESIGNS

CONTRACTORS LICENSE #837357

NORTHERN CALIFORNIA DIVISON
450 COMMERCE AVE
ATWATER, CA 95301
PHONE: (209) 676-8029
FAX: (209) 676-8067
WEBSITE: WWW.GDVI.NET

SOUTHERN CALIFORNIA DIVISON
1860 CHICAGO AVE., SUITE I-7
RIVERSIDE, CA 92507
PHONE: (951) 686-3633
FAX: (951) 686-3666
WEBSITE: WWW.GDVI.NET

THIS DRAWING AND THE MATERIAL CONTAINED THERE-IN ARE THE PROPERTY OF GLOBAL MODULAR, INC. AND SHALL NOT BE REPRODUCED, COPED OR OTHERWISE DISPOSED OF DIRECTLY OR INDIRECTLY AND SHALL NOT BE USED IN WHOLE OR IN PART TO ASSIST IN THE MAKING OF OR FOR THE PURPOSE OF FURNISHING ANY INFORMATION FOR THE MAKING OF DRAWINGS, PRINTS APPARATUS OR PARTS THEREOF WITHOUT THE FULL KNOWLEDGE AND WRITTEN CONSENT OF GLOBAL MODULAR, INC. ALL PATENTABLE MATERIAL CONTAINED HEREIN AND ORIGINATING WITH GLOBAL MODULAR, INC, SHALL BE THE PROPERTY OF GLOBAL MODULAR, INC.

PROJECT NAME:

24x40
GYM VENTURA
FIRE DEPARTMENT
2269 ALESSANDRO DR, VENTURA, CA 93001

SHEET TITLE:

INTERIOR ELEVATIONS
24'X40'

PUBLIC WORKS DEPARTMENT ENGINEERING DIVISION
CITY OF SAN BUENAVENTURA

PRINCIPAL ENGINEER — DATE: 5 May 2026

CITY ENGINEER — DATE: 5/7/2026

MFR. STRUCTURAL ENGINEER OF RECORD

MFR. PROJECT SPECIFIC PROFESSIONAL OF RECORD

ARCHITECT OF RECORD

REVISIONS

1 -
2 -
3 -
4 -

PROJECT NO.:
DRAWN BY:
SCALE: AS NOTED
DATE:

SHEET NUMBER

A4.1

SPEC NO. 2025-010 DWG. NO. 2025-D-010

FOR REFERENCE ONLY

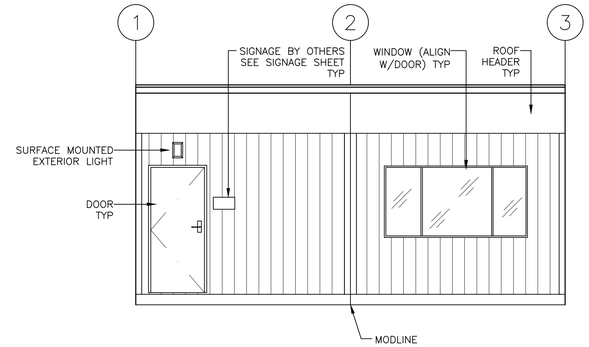

ELEVATION A

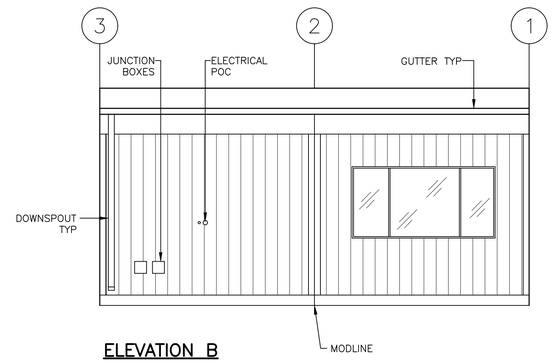

ELEVATION B

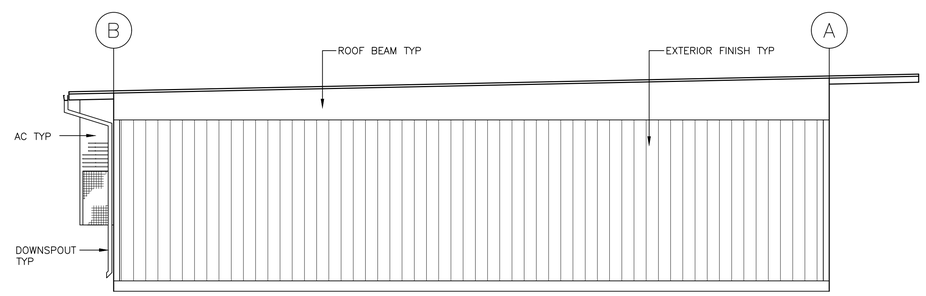

ELEVATION C

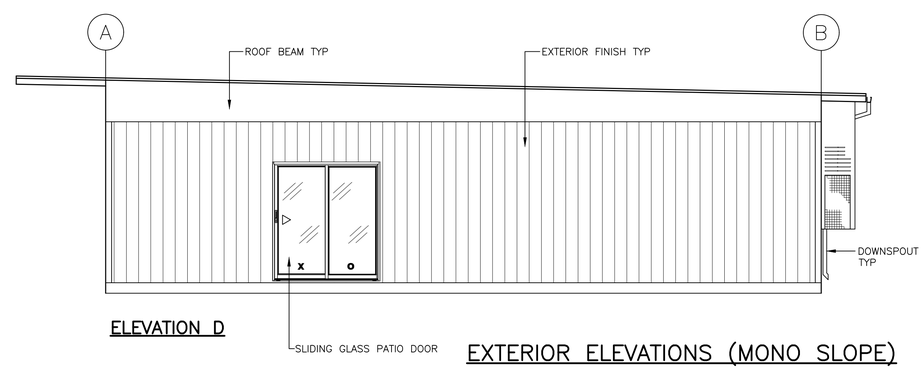

ELEVATION D

EXTERIOR ELEVATIONS (MONO SLOPE)

SCALE: 1/4" = 1'-0"

- RAMP AND LANDING NOT SHOWN FOR CLARITY

PROJECT SPECIFIC STATE AGENCY APPROVAL

GLOBAL MODULAR incorporated

AURORA DESIGNS · MODTECH Designs · MODULAR STRUCTURES INTERNATIONAL, INC. DESIGNS

CONTRACTORS LICENSE #837357

NORTHERN CALIFORNIA DIVISON
450 COMMERCE AVE
ATWATER, CA 95301
PHONE: (209) 676-8029
FAX: (209) 676-8067
WEBSITE: WWW.GDVI.NET

SOUTHERN CALIFORNIA DIVISON
1860 CHICAGO AVE., SUITE I-7
RIVERSIDE, CA 92507
PHONE: (951) 686-3633
FAX: (951) 686-3666
WEBSITE: WWW.GDVI.NET

THIS DRAWING AND THE MATERIAL CONTAINED THERE-IN ARE THE PROPERTY OF GLOBAL MODULAR, INC. AND SHALL NOT BE REPRODUCED, COPED OR OTHERWISE DISPOSED OF DIRECTLY OR INDIRECTLY AND SHALL NOT BE USED IN WHOLE OR IN PART TO ASSIST IN THE MAKING OF OR FOR THE PURPOSE OF FURNISHING ANY INFORMATION FOR THE MAKING OF DRAWINGS, PRINTS APPARATUS OR PARTS THEREOF WITHOUT THE FULL KNOWLEDGE AND WRITTEN CONSENT OF GLOBAL MODULAR, INC. ALL PATENTABLE MATERIAL CONTAINED HEREIN AND ORIGINATING WITH GLOBAL MODULAR, INC, SHALL BE THE PROPERTY OF GLOBAL MODULAR, INC.

PROJECT NAME:

24x40
GYM VENTURA
FIRE DEPARTMENT
2269 ALESSANDRO DR, VENTURA, CA 93001

SHEET TITLE:

EXTERIOR ELEVATIONS
WOOD SIDING
24'x40'

PUBLIC WORKS DEPARTMENT ENGINEERING DIVISION
CITY OF SAN BUENAVENTURA

PRINCIPAL ENGINEER — DATE: 5 May 2026

CITY ENGINEER — DATE: 5/7/2026

MFR. STRUCTURAL ENGINEER OF RECORD

MFR. PROJECT SPECIFIC PROFESSIONAL OF RECORD

ARCHITECT OF RECORD

REVISIONS

1 -
2 -
3 -
4 -

PROJECT NO.:
DRAWN BY:
SCALE: AS NOTED
DATE:

SHEET NUMBER

A5.1

SPEC NO. 2025-010 DWG. NO. 2025-D-010

POWER PANEL E

125A MAIN BKR

Rated Amps: 125A
Interior: X
Exterior:
NEMA Rated: 1R

Volts: 120/208
Phase / Wire: 3 PHASE/4 WIRE
Flush: X
Surface:

Description	Load	Ckt Bkr			Ckt Bkr	Load	Description
5 TON RXTA60AAVJU	3598	2	1	2	1/20	180	EXT. RECEPT/GFCI/WP
5 TON RXTA60AAVJU	3598	35	3	4	1/20	1080	RECEPT
			5	6	1/20	900	RECEPT
			7	8	1/20	414	INT LIGHTS
RECEPT for TV	142	1/20	9	10	1/20	5	EXT LIGHTS
CAMERAS	180	1/20	11	12	1/20	142	RECEPT for TV
			13	14			
			15	16			
TREADMILL	1500	1/20	17	18	1/20	1500	RECEPT for TV
			19	20			
			21	22			
			23	24			

4,192 Watts + 4,824 Watts + 4,222 Watts = 3,310 25% Watts ÷ 360 Voltage = 46 A Amps Per Phase

(L) LABEL AND LOCK ON DEVICE

* DEDICATED CIRCUIT (RED, LOCKING) LABELED PER NFPA 72:10.6.5.2

CAM — J BOX FOR CAMERA W/SINGLE DEVICE COVER W/ BLANK PLATE 4SQ BOX W/3/4" CONDUIT TO ATTIC W/ PULLSTRING

2 — CAT6E CABLE WALL BOX & PLATE WITH RJ45 JACK-(2) PORTS

MSS — MESSAGE SIGN BOARD (USDD)

REAR

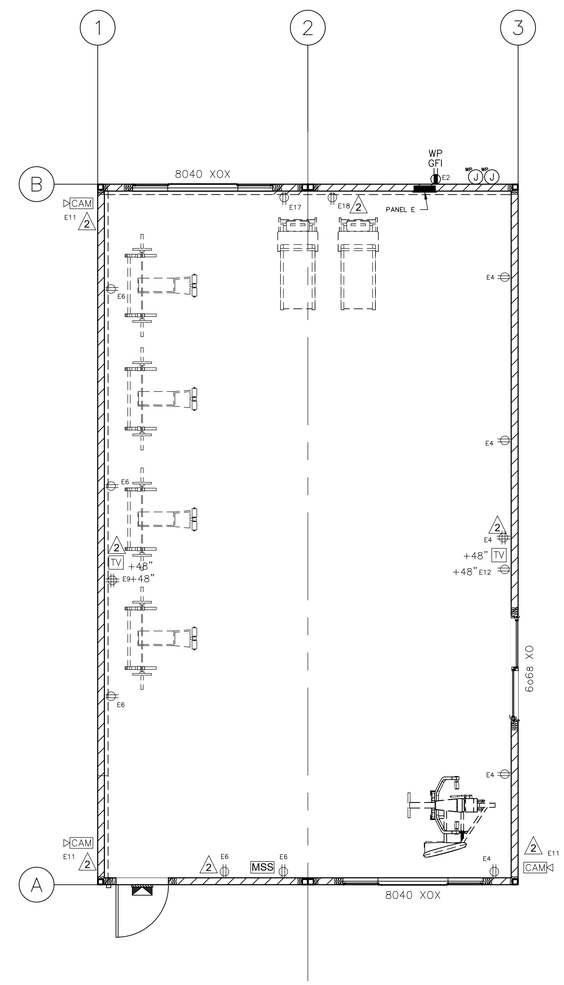

LEFT

RIGHT

FRONT

S/N 2BE3265

S/N 2BE3266

PROJECT SPECIFIC STATE AGENCY APPROVAL

GLOBAL MODULAR Incorporated

AURORA DESIGNS · MODTECH Designs · MODULAR STRUCTURES INTERNATIONAL, INC. DESIGNS

CONTRACTORS LICENSE #837357

NORTHERN CALIFORNIA DIVISON
450 COMMERCE AVE
ATWATER, CA 95301
PHONE: (209) 676-8029
FAX: (209) 676-8087
WEBSITE: WWW.GDVI.NET

SOUTHERN CALIFORNIA DIVISON
1860 CHICAGO AVE., SUITE I-7
RIVERSIDE, CA 92507
PHONE: (951) 686-3633
FAX: (951) 686-3666
WEBSITE: WWW.GDVI.NET

THIS DRAWING AND THE MATERIAL CONTAINED THERE-IN ARE THE PROPERTY OF GLOBAL MODULAR, INC. AND SHALL NOT BE REPRODUCED, COPED OR OTHERWISE DISPOSED OF DIRECTLY OR INDIRECTLY AND SHALL NOT BE USED IN WHOLE OR IN PART TO ASSIST IN THE MAKING OF OR FOR THE PURPOSE OF FURNISHING ANY INFORMATION FOR THE MAKING OF DRAWINGS, PRINTS APPARATUS OR PARTS THEREOF WITHOUT THE FULL KNOWLEDGE AND WRITTEN CONSENT OF GLOBAL MODULAR, INC. ALL PATENTABLE MATERIAL CONTAINED HEREIN AND ORIGINATING WITH GLOBAL MODULAR, INC, SHALL BE THE PROPERTY OF GLOBAL MODULAR, INC.

PROJECT NAME:

24x40
GYM VENTURA
FIRE DEPARTMENT
2269 ALESSANDRO DR, VENTURA, CA 93001

SHEET TITLE:

ELECTRICAL PLAN
POWER
24'X40'

PUBLIC WORKS DEPARTMENT ENGINEERING DIVISION
CITY OF SAN BUENAVENTURA

PRINCIPAL ENGINEER — DATE: 5 May 2026

CITY ENGINEER — DATE: 5/7/2026

MFR. STRUCTURAL ENGINEER OF RECORD

MFR. PROJECT SPECIFIC PROFESSIONAL OF RECORD

ARCHITECT OF RECORD

REVISIONS
1 -
2 -
3 -
4 -

PROJECT NO.:
DRAWN BY:
SCALE: AS NOTED
DATE:

SHEET NUMBER

E1.0

SPEC NO. 2025-010 DWG. NO. 2025-D-010

POWER PANEL E

125A MAIN BKR

Rated Amps: 125A
Interior: X
Exterior:
NEMA Rated: 1R

Volts: 120/208
Phase / Wire: 3 PHASE/4 WIRE
Flush: X
Surface:

Description	Load	Ckt Bkr			Ckt Bkr	Load	Description
5 TON RXTA60AAVJU	3598	2	1	2	1/20	180	EXT. RECEPT/GFCI/WP
5 TON RXTA60AAVJU	3598	35	3	4	1/20	1080	RECEPT
			5	6	1/20	900	RECEPT
			7	8	1/20	414	INT LIGHTS
RECEPT for TV	142	1/20	9	10	1/20	5	EXT LIGHTS
CAMERAS	180	1/20	11	12	1/20	142	RECEPT for TV
			13	14			
			15	16			
TREADMILL	1500	1/20	17	18	1/20	1500	RECEPT for TV
			19	20			
			21	22			
			23	24			

4,192 Watts + 4,824 Watts + 4,222 Watts = 3,310 25% Watts ÷ 360 Voltage = 46 A Amps Per Phase

(L) LABEL AND LOCK ON DEVICE

* DEDICATED CIRCUIT (RED, LOCKING) LABELED PER NFPA 72:10.6.5.2

LED ALERTING SPEAKER (USDD DISPATCH ALERTING)

CAT6E CABLE AND RJ45 PLUG FOR CEILING MOUNTED WIRELESS ACCESS POINT

REAR

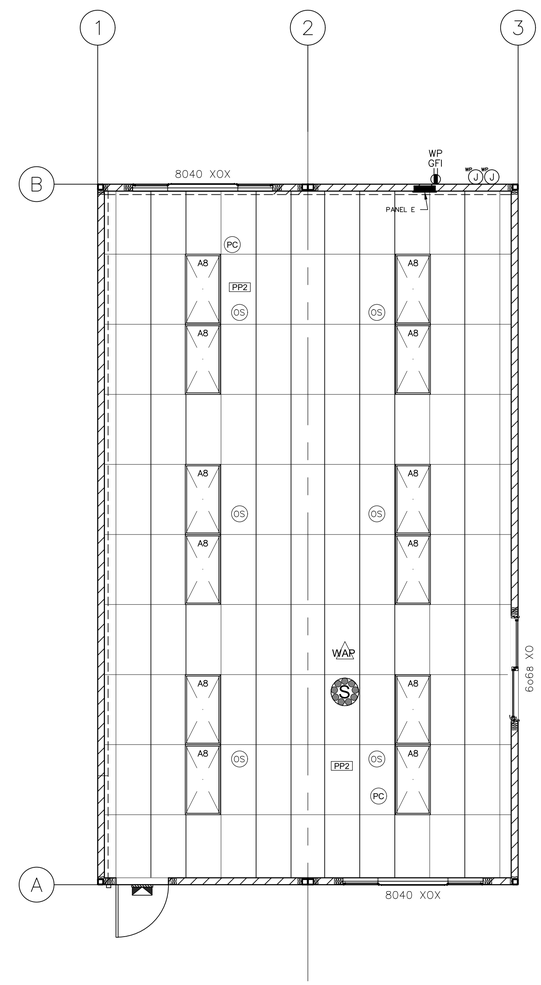

LEFT

RIGHT

FRONT

E10

S/N 2BE3265

S/N 2BE3266

PROJECT SPECIFIC STATE AGENCY APPROVAL

GLOBAL MODULAR incorporated

AURORA DESIGNS MODTECH Designs MODULAR STRUCTURES INTERNATIONAL, INC. DESIGNS

CONTRACTORS LICENSE #837357

NORTHERN CALIFORNIA DIVISON
450 COMMERCE AVE
ATWATER, CA 95301
PHONE: (209) 676-8029
FAX: (209) 676-8067
WEBSITE: WWW.GDVI.NET

SOUTHERN CALIFORNIA DIVISON
1860 CHICAGO AVE., SUITE I-7
RIVERSIDE, CA 92507
PHONE: (951) 686-3633
FAX: (951) 686-3666
WEBSITE: WWW.GDVI.NET

THIS DRAWING AND THE MATERIAL CONTAINED THERE-IN ARE THE PROPERTY OF GLOBAL MODULAR, INC. AND SHALL NOT BE REPRODUCED, COPED OR OTHERWISE DISPOSED OF DIRECTLY OR INDIRECTLY AND SHALL NOT BE USED IN WHOLE OR IN PART TO ASSIST IN THE MAKING OF OR FOR THE PURPOSE OF FURNISHING ANY INFORMATION FOR THE MAKING OF DRAWINGS, PRINTS APPARATUS OR PARTS THEREOF WITHOUT THE FULL KNOWLEDGE AND WRITTEN CONSENT OF GLOBAL MODULAR, INC. ALL PATENTABLE MATERIAL CONTAINED HEREIN AND ORIGINATING WITH GLOBAL MODULAR, INC, SHALL BE THE PROPERTY OF GLOBAL MODULAR, INC.

PROJECT NAME:

24x40
GYM VENTURA
FIRE DEPARTMENT
2269 ALESSANDRO DR, VENTURA, CA 93001

SHEET TITLE:

ELECTRICAL PLAN
LIGHTING
24'X40'

PUBLIC WORKS DEPARTMENT ENGINEERING DIVISION
CITY OF SAN BUENAVENTURA

PRINCIPAL ENGINEER — DATE: 5 May 2026

CITY ENGINEER — DATE: 5/7/2026

MFR. STRUCTURAL ENGINEER OF RECORD

MFR. PROJECT SPECIFIC PROFESSIONAL OF RECORD

ARCHITECT OF RECORD

REVISIONS
1 -
2 -
3 -
4 -

PROJECT NO.:
DRAWN BY:
SCALE: AS NOTED
DATE:

SHEET NUMBER

E2.0

SPEC NO. 2025-010 DWG. NO. 2025-D-010

FOR REFERENCE ONLY

REAR

LEFT

RIGHT

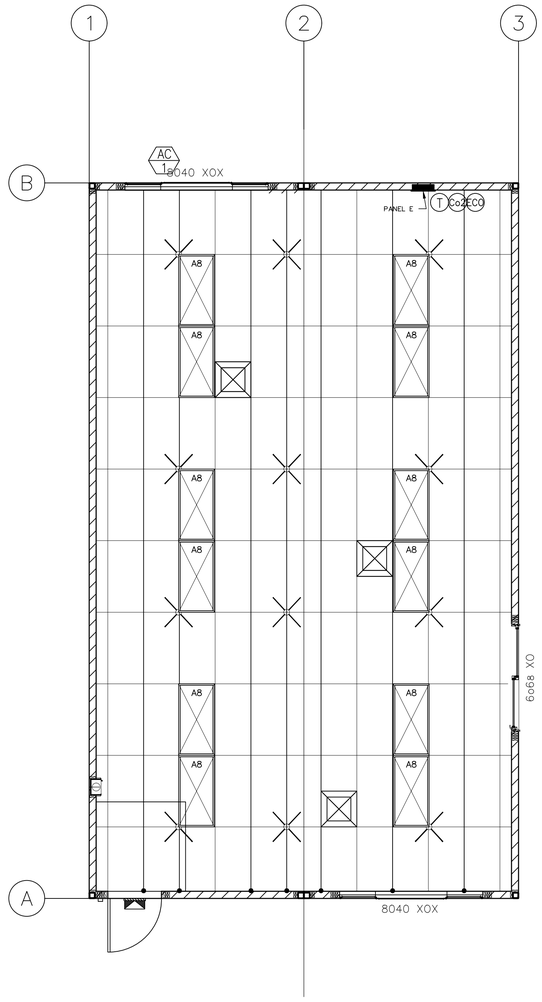

FRONT

AIR CONDITIONING PLAN VIEW

SCALE: 1/4" = 1'-0"

HVAC:

MARVAIR: HVPA42HPA050BU WALL MOUNTED HEAT PUMP
40,000 BTUH COOLING, SEER= 13.00
36,000 BTUH HEATING, HSPF= 8.00
1360 CFM @ .20" SP, WT= 590 LBS
208/230V-1PH-60CY, MAX FLA= 50.1 AMPS
MOTORIZED DAMPER

PROJECT SPECIFIC STATE AGENCY APPROVAL

GLOBAL MODULAR incorporated

AURORA DESIGNS · MODTECH Designs · MODULAR STRUCTURES INTERNATIONAL, INC. DESIGNS

CONTRACTORS LICENSE #837357

NORTHERN CALIFORNIA DIVISON
450 COMMERCE AVE
ATWATER, CA 95301
PHONE: (209) 676-8029
FAX: (209) 676-8087
WEBSITE: WWW.GDVI.NET

SOUTHERN CALIFORNIA DIVISON
1860 CHICAGO AVE., SUITE I-7
RIVERSIDE, CA 92507
PHONE: (951) 686-3633
FAX: (951) 686-3666
WEBSITE: WWW.GDVI.NET

THIS DRAWING AND THE MATERIAL CONTAINED THERE-IN ARE THE PROPERTY OF GLOBAL MODULAR, INC. AND SHALL NOT BE REPRODUCED, COPED OR OTHERWISE DISPOSED OF DIRECTLY OR INDIRECTLY AND SHALL NOT BE USED IN WHOLE OR IN PART TO ASSIST IN THE MAKING OF OR FOR THE PURPOSE OF FURNISHING ANY INFORMATION FOR THE MAKING OF DRAWINGS, PRINTS APPARATUS OR PARTS THEREOF WITHOUT THE FULL KNOWLEDGE AND WRITTEN CONSENT OF GLOBAL MODULAR, INC. ALL PATENTABLE MATERIAL CONTAINED HEREIN AND ORIGINATING WITH GLOBAL MODULAR, INC, SHALL BE THE PROPERTY OF GLOBAL MODULAR, INC.

PROJECT NAME:

24x40
GYM VENTURA
FIRE DEPARTMENT
2269 ALESSANDRO DR, VENTURA, CA 93001

SHEET TITLE:

MECHANICAL PLAN
WALL MOUNT
24'X40'

PUBLIC WORKS DEPARTMENT ENGINEERING DIVISION
CITY OF SAN BUENAVENTURA

PRINCIPAL ENGINEER — DATE: 5 May 2026

CITY ENGINEER — DATE: 5/7/2026

MFR. STRUCTURAL ENGINEER OF RECORD

MFR. PROJECT SPECIFIC PROFESSIONAL OF RECORD

ARCHITECT OF RECORD

REVISIONS
1 -
2 -
3 -
4 -

PROJECT NO.:
DRAWN BY:
SCALE: AS NOTED
DATE:

SHEET NUMBER

M1.1

SPEC NO. 2025-010 DWG. NO. 2025-D-010

FOR REFERENCE ONLY

CONSTRUCTION NOTES:

UNLESS OTHERWISE SPECIFIED ON THE WORKING DRAWING WHICH FORMS A PART OF THE SPECIFICATION, THE CONTRACTOR/DEVELOPER SHALL FURNISH THE FOLLOWING ITEMS AT NO COST TO THE EDISON COMPANY.

SOUTHERN CALIFORNIA EDISON COMPANY HAS ATTEMPTED TO CORRECTLY SHOW ALL EXISTING UTILITIES AND SUBSTRUCTURES IN THE VICINITY OF THE WORK, BUT DOES NOT GUARANTEE THERE ARE NO OTHER SUBSTRUCTURES IN THE AREA. FAILURE OF SCE TO SHOW ALL SUBSTRUCTURES IN THEIR CORRECT LOCATION WILL NOT BE A BASIS FOR A CLAIM FOR EXTRA WORK, AND THE CONTRACTOR SHALL BE RESPONSIBLE FOR ALL DAMAGES TO SUBSTRUCTURES WHETHER SHOWN OR NOT.

1. FOR GENERAL SPECIFICATIONS SEE UGS GI 001.

2. CONDUIT:
   a. MINIMUM COVER IN STREET OR PARKWAY IS 30" BELOW GUTTER GRADE, UNLESS NOTED OTHERWISE.
   b. MINIMUM COVER ON PRIVATE PROPERTY IS 30" BELOW FINISHED GRADE, UNLESS NOTED OTHERWISE.
   c. CONTRACTOR IS TO FURNISH AND INSTALL APPROVED CONDUIT TO EDISON SPECIFICATIONS PER UGS CD 100.1, 110 AND 120.
   d. FOR THE TYPE OF CONDUIT FOR THIS JOB, SEE UGS CD 110.1.
   e. INSTALL ALL RISERS PER UGS CD 160, 161, 162 AND 170.
   f. CAP ALL MAINLINE CONDUITS PER UGS CD 148 AND SERVICE CONDUITS PER UGS CD 150.
   g. INSTALL BLANK CONDUIT PLUGS IN ALL CONDUITS TERMINATING INTO VAULTS, MANHOLE'S, PMH'S, SOE'S & ALL CAP LOCATIONS, PER UGS CD 180.1 & UGS CD 180.2
   h. INSTALL PULL ROPE IN ALL CONDUIT RUNS. PULL ROPE TO BE AT LEAST 3/8" POLYPROPYLENE ROPE, BRAIDED OR TWISTED. FOR SPECIFICATIONS, APPROVED MAKES, AND SUPPLIERS, SEE UGS GI 040.
   i. ALL CONDUIT MUST BE MANDRELED WITH THE APPROVED MANDREL UGS CD 197.

3. CONDUIT RADIUS REQUIREMENTS:
   a. THE MINIMUM RADIUS FOR BENDS ARE:
      36" FOR CONDUITS 3" IN DIAMETER OR SMALLER
      48" FOR CONDUITS 4" AND 5" IN DIAMETER
      60" FOR 6" DIAMETER CONDUIT
   b. THE MINIMUM RADIUS FOR ALL SWEEPS OF ALL MAINLINE CONDUITS IS 12'-6" (UNLESS NOTED OTHERWISE).

4. EXCAVATION AND BACKFILL:
   a. WORK AREA SHALL BE CLEARED AND ROUGH GRADED TO WITHIN FOUR INCHES OF FINAL GRADE PRIOR TO INSTALLATION OF EDISON CONDUIT OR STRUCTURES.
   b. ALL EXCAVATIONS SHALL BE IN ACCORDANCE WITH THE CALIFORNIA STATE CONSTRUCTION SAFETY ORDERS (WHEN APPLICABLE), EDISON SPECIFICATIONS, AND ALL GOVERNING LOCAL ORDINANCES.
   c. EACH TRENCH TO BE A UNIFORM DEPTH BELOW FINAL GRADE PRIOR TO INSTALLATION OF EDISON CONDUIT OR STRUCTURES.
   d. BACKFILL SHALL BE PROVIDED BY THE CONTRACTOR FOR ALL EXCAVATIONS AND SHALL INCLUDE CRUSHED ROCK, CONCRETE, AND/OR IMPORTED BACKFILL, WHEN REQUIRED.
   e. BACKFILL WITH A MINIMUM OF ONE SACK PER YARD SAND CEMENT SLURRY AROUND AND OVER VAULTS AND MANHOLES PER UGS GI 030, SECTION 6.4 AND AROUND PMH'S WITHIN ONE FOOT OF FINISHED GRADE, PER UGS SS 590.1.
   f. BACKFILL, PER EDISON SPECIFICATIONS, SHALL IMMEDIATELY FOLLOW CONDUIT OR SUBSTRUCTURE INSTALLATION. AT NO TIME SHALL CONDUIT BE LEFT EXPOSED OVER 24 HOURS.
   g. NO ROCKS ARE ALLOWED WITHIN 12 INCHES OF DIRECT-BURIED CABLES OR ANY CONDUIT WITHOUT CONCRETE ENCASEMENT. NATIVE BACKFILL CAPABLE OF PASSING THROUGH A ONE-HALF INCH MESH SCREEN SHALL BE CONSIDERED TO BE "ROCK FREE". IF EXISTING BACKFILL DOES NOT PASS THROUGH A 1/2" SCREEN, PLACE IMPORTED SAND 3" BELOW AND 12" ABOVE EDISON CABLES. AFTER THIS POINT, NO ROCKS LARGER THAN 12" DIAMETER ARE PERMITTED.
   h. ALL BACKFILL SHALL BE COMPACTED TO MEET OR EXCEED LOCAL ORDINANCES OR OTHER REQUIREMENTS. IT SHALL BE PLACED IN A MANNER THAT WILL NOT DAMAGE THE CONDUIT OR SUBSTRUCTURE OR ALLOW FUTURE SUBSIDENCE OF THE TRENCH OR STRUCTURES.

5. PAVING:
   REPAVING, WHERE REQUIRED, SHALL BE PLACED IN SUCH A MANNER THAT INTERFERENCE WITH TRAFFIC, INCLUDING PEDESTRIAN TRAFFIC, WILL BE KEPT TO A MINIMUM. THE CONTRACTOR SHALL ESTABLISH A PROGRAM OF REPAVING ACCEPTABLE TO THE MUNICIPALITY, COUNTY, OR OTHER AUTHORITY HAVING JURISDICTION AND WHICH IS ACCEPTABLE TO EDISON.

6. STRUCTURES:
   a. ALL SUBSTRUCTURES SHALL BE CONSTRUCTED OR INSTALLED TO EDISON SPECIFICATIONS.
   b. INSTALL PROTECTION BARRIERS PER UGS MS 830 WHEN REQUIRED IN AREAS EXPOSED TO TRAFFIC, PER EDISON INSPECTOR.
   c. ALL CONDUIT LINES AND CONCRETE FLOORED SUBSTRUCTURES SHALL BE WATER TIGHT.
   d. ALL GROUNDING MATERIALS SHALL BE FURNISHED AND INSTALLED BY THE CONTRACTOR.

7. RETAINING WALLS:
   WHEN REQUIRED, RETAINING WALLS SHALL BE PROVIDED BY THE DEVELOPER. WALLS ARE REQUIRED WHEREVER GRADE RISES MORE THAN 18 INCHES ABOVE THE STRUCTURE OR 24" ABOVE THE PAD SURFACE AT A DISTANCE OF 5 FEET FROM THE SAME, OR IN AREAS SUBJECT TO EROSION. DESIGN AND INSTALLATION MUST COMPLY WITH LOCAL BUILDING ORDINANCES. REFER TO EDISON INSPECTOR FOR TYPICAL SPACE REQUIREMENTS.

8. PERMITS:
   ALL PERMITS NECESSARY FOR EXCAVATION SHALL BE PROVIDED BY THE CONTRACTOR/DEVELOPER.

9. ACCESS:
   HEAVY TRUCK ACCESS SHALL BE MAINTAINED TO EQUIPMENT LOCATIONS. STRUCTURES MUST BE CLEAR OF ALL APPURTENANCES THAT WOULD OBSTRUCT THE LOADING OR UNLOADING OF EQUIPMENT.

10. SERVICES:
   a. METERS AND SERVICES SHALL COMPLY WITH EDISON ELECTRICAL SERVICES REQUIREMENTS.
   b. WIRING MUST BE IN ACCORDANCE WITH APPLICABLE LOCAL ORDINANCES AND APPROVED BY LOCAL INSPECTION AUTHORITIES.

11. LOCATION:
   a. THE LOCATION OF EXCAVATIONS AND STRUCTURES FOR EDISON SHALL BE AS SHOWN ON THE WORKING DRAWING. NO DEVIATION FROM THE PLANNED LOCATIONS WILL BE PERMITTED UNLESS APPROVED BY THE EDISON INSPECTOR. SEE UGS GI 001, SECTION 2.2.
   b. ACTUAL LOCATION OF OBSTRUCTIONS, STORM DRAINS, AND/OR OTHER FOREIGN UTILITIES TO BE THE RESPONSIBILITY OF THE CONTRACTOR. SEE UGS GI 001, SECTION 2.3.

12. CONTRACTOR IS TO VERIFY LOCATION AND WIDTHS OF ALL SIDEWALKS AND DRIVEWAYS PRIOR TO STREET LIGHT INSTALLATION. SEE UGS CD 175.1, UGS CD 175.2 AND UGS CD 175.3.

13. SURVEY:
   SURVEYING OF STREET IMPROVEMENTS, PROPERTY CORNERS, LOT LINES, FINISHED GRADE, ETC., NECESSARY FOR THE INSTALLATION OF UNDERGROUND FACILITIES MUST BE COMPLETED AND MARKERS OR STAKES PLACED PRIOR TO THE START OF THE INSTALLATION. IN ADDITION, DEVELOPER SHALL MAINTAIN THE MARKERS DURING THE INSTALLATION AND INSPECTION BY EDISON. GRADE AND PROPERTY LINE STAKES MUST SHOW ANY OFFSET MEASUREMENTS.

14. COORDINATION AND SUPERVISION:
   THE DEVELOPER SHALL PROVIDE SUPERVISION OVER AND COORDINATION AMONG THE VARIOUS CONTRACTORS WORKING WITHIN THE DEVELOPMENT IN ORDER TO PREVENT DAMAGE TO EDISON FACILITIES. HE IS RESPONSIBLE FOR THE COST OF REPAIRS, REPLACEMENT, RELOCATION, OR OTHER CORRECTIONS TO EDISON FACILITIES MADE NECESSARY BY HIS FAILURE TO PROVIDE SUPERVISION OR TO OTHERWISE COMPLY WITH THESE SPECIFICATIONS.

15. TELEPHONE AND OTHER UTILITY REQUIREMENTS:
   THE DRAWING PREPARED FOR THIS JOB MAY ALSO COVER THE FACILITIES TO BE INSTALLED FOR THE TELEPHONE COMPANY AND/OR OTHER UTILITY. ANY QUESTIONS CONCERNING DETAILS OF THEIR INSTALLATION SHOULD BE REFERRED TO THE COMPANY CONCERNED.

16. OWNERSHIP:
   DEVELOPER IS TO DEED TO THE EDISON COMPANY ALL STRUCTURES SHOWN HEREON EXCEPT THOSE SHOWN AS CUSTOMER OWNED.

17. WARRANTY:
   APPLICANTS EXPRESSLY REPRESENT AND WARRANT THAT ALL WORK PERFORMED AND ALL MATERIAL USED IN MEETING APPLICANTS' OBLIGATIONS HEREIN ARE FREE FROM DEFECTS IN WORKMANSHIP AND ARE IN CONFORMITY WITH SOUTHERN CALIFORNIA EDISON COMPANY'S REQUIREMENTS. THIS WARRANTY SHALL COMMENCE UPON RECEIPT BY APPLICANTS OF COMPANY'S FINAL ACCEPTANCE AND SHALL EXPIRE ONE YEAR FROM THAT DATE. APPLICANTS AGREE TO PROMPTLY CORRECT TO THE COMPANY'S SATISFACTION AND THAT OF ANY GOVERNMENTAL AGENCY HAVING JURISDICTION AND AT APPLICANT'S EXPENSE ANY BREACH OF THIS WARRANTY WHICH MAY BECOME APPARENT THROUGH INSPECTION OR OPERATION OF UNDERGROUND ELECTRIC SYSTEM BY COMPANY DURING THIS WARRANTY PERIOD.

18. INSPECTION:
   INSPECTION IS REQUIRED DURING THE CONSTRUCTION PERIOD. A 48 HOUR ADVANCE NOTICE OF INTENT TO START CONSTRUCTION IS REQUIRED FROM THE CONTRACTOR TO THE SOUTHERN CALIFORNIA EDISON COMPANY. STANDARDS OF EDISON CONSTRUCTION REQUIREMENTS ARE AVAILABLE UPON REQUEST.

DUCT AND STRUCTURE INSPECTOR: PHONE:

CABLING CONSTRUCTION COORDINATOR: PHONE:

D05: 03/22/24

WORKING SPACE AND CLEARANCE REQUIREMENTS 0–600V (SIDE VIEW)
UNDERGROUND SERVICE CONNECTIONS 0–600 VOLTS
SEE ESR FIGURE 3–2

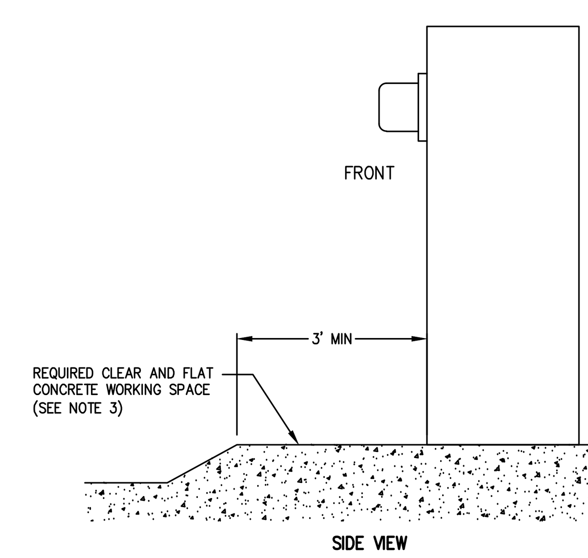

NOTES:
1. A MINIMUM OF 3 FEET OF CLEAR, LEVEL CONCRETE WORKSPACE IS REQUIRED IN FRONT OF ALL TERMINATION, METERING, AND SERVICE EQUIPMENT.
2. SEE ESR–5 FOR METER–MOUNTING HEIGHT REQUIREMENTS. METER–MOUNTING HEIGHT WILL BE MEASURED FROM THE STANDING AND WORKING SPACE TO THE CENTERLINE OF THE METER(S).
3. WHEN SERVICE EQUIPMENT IS INSTALLED ON AN ELEVATED PORTION OF THE FLOOR/GROUND, OR HOUSEKEEEPING PAD, THE PAD SHALL BE FLUSH WITH THE BOTTOM OF THE SERVICE EQUIPMENT AND EXTEND A MINIMUM OF THREE FEET. THIS IS MEASURED FROM THE FRONT OF THE SERVICE EQUIPMENT OR THE OUTER DOOR(S) OF THE SWITCHBOARD NEMA 3R ENCLOSURE WHEN INSTALLED. IN NO CASE SHALL THE MAXIMUM METER HEIGHT OF 6'–3" BE EXCEEDED.
4. TO MAINTAIN A SAFE, CLEAR, AND LEVEL CONCRETE WORKING AREA IN FRONT OF NEW OR EXISTING METER AND SERVICE EQUIPMENT, A CONCRETE SLAB, ACCEPTABLE TO THE COMPANY, MUST BE USED.
5. FOR SWITCHBOARDS ABOVE 600V, FIVE–FOOT MINIMUM OF CLEAR AND LEVEL CONCRETE STANDING AND WORKING SPACE IS REQUIRED IN THE FRONT, REAR, AND SIDE OF ANY SECTION WHERE SUCH PART SUPPORTS OR PROVIDES ACCESS TO METERING, TESTING EQUIPMENT, OR SERVICE CABLE TERMINATION SECTIONS.

16.11 PROTECTIVE BARRIERS (POSTS/BOLLARDS) FOR SERVICE EQUIPMENT
BARRIER POSTS/BOLLARDS ARE USED TO PROTECT THE METER AND SERVICE EQUIPMENT, AS WELL AS PERSONNEL, FROM VEHICULAR CONTACT, AND TO PROHIBIT ENCROACHMENT INTO THE WORKING SPACE (FOR EXAMPLE, LOADING ZONES, DRIVEWAYS, CONGESTED AREAS, OFF STREET PARKING, AND SO ON).

THE CUSTOMER SHALL PROVIDE AND INSTALL "NON–REMOVABLE" BARRIERS (POSTS/BOLLARDS) TO PROVIDE THE PROPER SAFE WORKING CLEARANCES WHERE THE WORKSPACE IS EXPOSED TO VEHICULAR OR OTHER HAZARDOUS CONDITIONS. METERS WILL NOT BE SET UNTIL THE BARRIERS HAVE BEEN INSTALLED. METER CABINET DOORS MUST OPEN A MINIMUM OF 90 DEGREES AND NOT CONFLICT WITH BARRIER POSTS. A MINIMUM CLEARANCE OF 3–FEET IS REQUIRED FROM THE FACE OF THE SWITCH GEAR TO THE BOLLARD/POST.

D99: 11/14/25

PULL BOX 3' X 5' PRECAST CONCRETE
SEE UGS HP 225

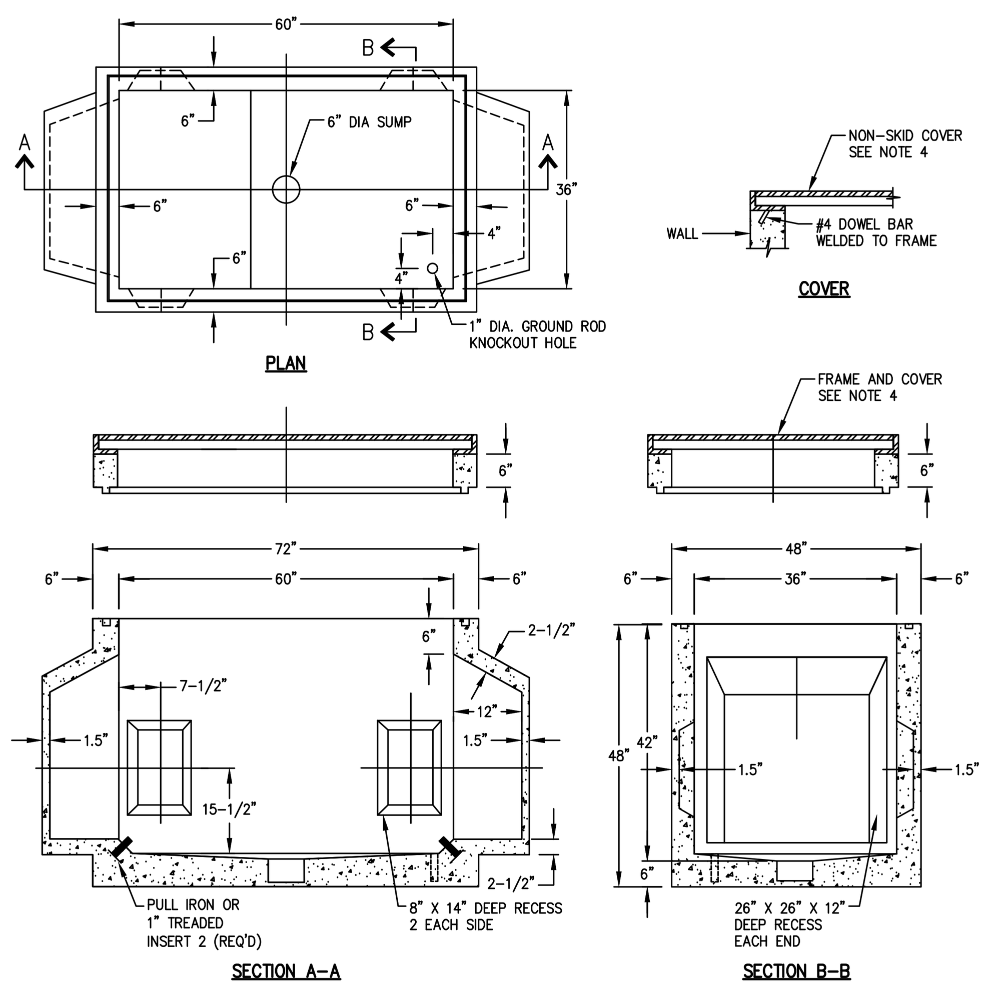

NOTE(S):
1. STRUCTURAL DESIGN CRITERIA:
   • H20–S BRIDGE LOADING PER ASTM C857
   • COVER DESIGN SHALL MEET ASTM C1802, LOAD LEVEL 6 (FULL TRAFFIC).
2. CONCRETE:
   CONCRETE SHALL BE CLASS "A" WITH 28–DAY COMPRESSIVE STRENGTH OF 3,000 PSI (MINIMUM). SLIGHT TAPER (3/4" IN DEPTH OF PULL BOX) AND 1" CHAMFER ON ALL INSIDE CORNERS PERMITTED FOR EASE OF FORMING.
3. INSTALLATION:
   PULL BOX SHALL BE PLACED ON 6" (MINIMUM) COMPACTED ROCK OR SAND BASE TO ENSURE UNIFORM DISTRIBUTION OF SOIL PRESSURE IN FLOOR. MINIMUM EXCAVATION FOR PULL BOX SHALL BE 52" X 97" X DEPTH TO SUIT JOB.
4. COVERS:
   SEE FC 615 AND FC 618 FOR PULL BOX COVERS. MINIMUM COVER COEFFICIENT OF FRICTION (COF) OF 0.70.
5. GRADE RINGS:
   INSTALLING CONTRACTOR SHALL PROVIDE GRADE RINGS (6" MINIMUM) AS NECESSARY IN ORDER TO MAINTAIN COVER OVER CONDUITS PER SCE SPECIFICATIONS OR PERMIT AGENCY SPECIFICATIONS, WHICHEVER IS GREATER.
6. PULL IRONS AND EYES:
   SEE AC 729 FOR PULL IRONS AND AC 720 FOR PULL EYES.
7. 2/0 GROUNDING REQUIRED.

D53C: 04/18/25

GROUND CONNECTION INSTALLATION IN A PVC VENT
SEE UGS AC 760.1

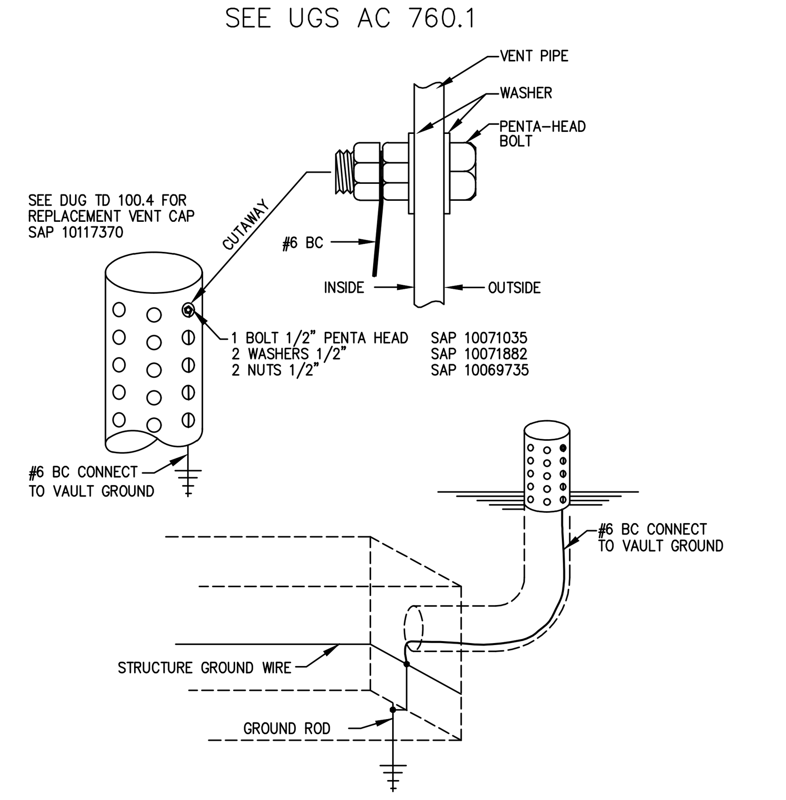

NOTE:
TO ASSIST IN UNDERGROUND STRUCTURE LOCATING FROM THE SURFACE, INSTALL A #6 BARE COPPER WIRE FROM INSIDE THE VENT PIPE TO THE STRUCTURE GROUND SYSTEM. THIS INSTALLATION WILL ALLOW A SINGLE PERSON CREW TO TIE INTO THE SYSTEM GROUND AND LOCATE THE FACILITIES UNAIDED. THE INSTALLATION SHOULD BE MADE DURING NEW CONSTRUCTION, ADDED TO THE APPROPRIATE STRUCTURE DURING THE ROUTINE MAINTENANCE CYCLE, OR AS THE NEED ARISES BY REQUEST FOR ASSISTANCE FROM THE CONTRACT CABLE LOCATING COMPANY.

D37: REV. 10/26/20

FILE NAME:1908055_0.01.DWG SAVE DATE:3/18/2026 7:54 AM SAVED BY:DEZAVARA

PAD FOR SURFACE–MOUNTED TRANSFORMER
POURED IN FIELD CONSTRUCTION AND PRECAST CONSTRUCTION (CONCRETE)
SEE UGS SS 504

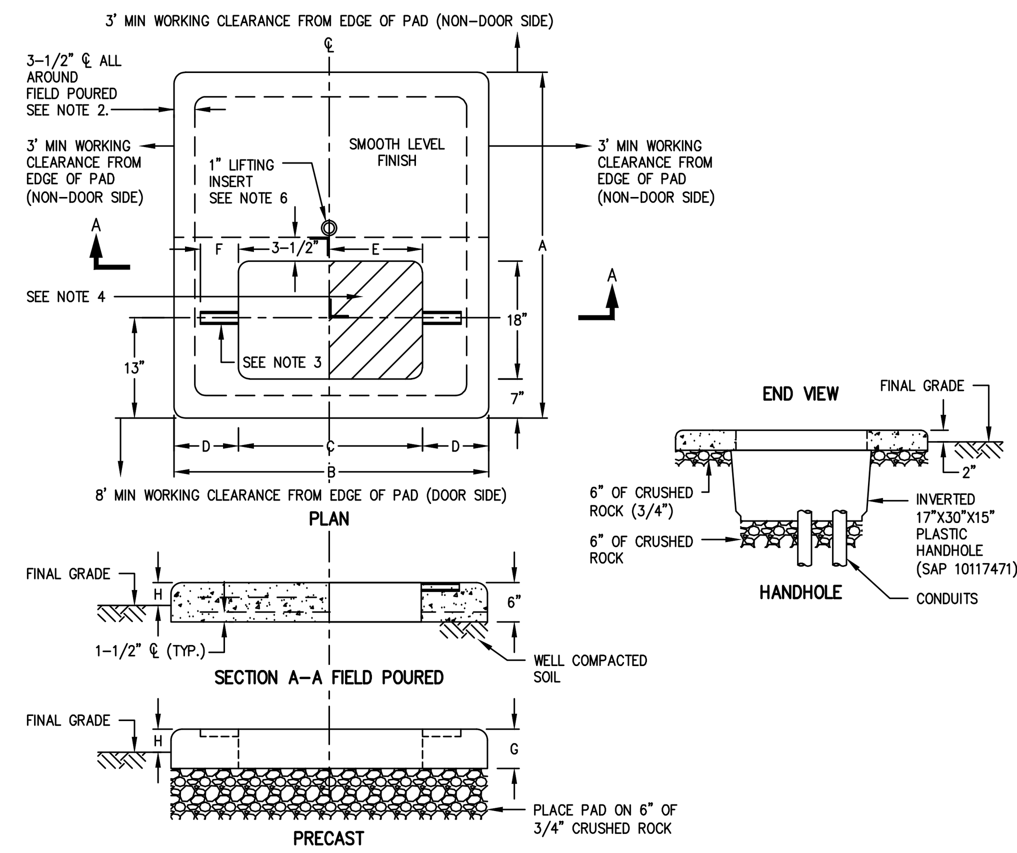

TABLE SS 504–1: SURFACE–MOUNTED TRANSFORMER PADS – DIMENSIONS

	TRANSFORMER	PAD DIMENSIONS (IN) A	B	C	D	E	F	G	H	WEIGHT (LB)	SAP
	1ø 25 KVA–167 KVA	54	48	26	11	12	6	4	2	750	10118012
FOR REFERENCE ONLY	3ø 75 KVA–150 KVA NO SWITCH	66	72	38	17	15	6	6	3	2,200	10118011 SEE NOTE 8
	3ø 75 KVA–500 KVA SW AND FUSE	72	94	50	22	22	14	6	3	3,200	10118013 SEE NOTE 8

NOTE(S):
1. CONCRETE TO BE 3,000 PSI (MINIMUM) AT 28 DAYS.
2. REINFORCING STEEL TO BE NO. 4 BARS INSTALLED IN A DOUBLE NET. PERIMETER BARS TO BE CONTINUOUS (8 INCH MINIMUM LAP OR WELD)
3. HOLD–DOWN BRACKETS TO BE P–3200 SERIES UNISTRUT (OR EQUAL).
4. PRIMARY CABLES MUST BE INSTALLED IN SHADED AREA OF DRAWING ABOVE AS FAR TO THE RIGHT AS POSSIBLE ON SINGLE PHASE TRANSFORMERS ONLY. ON THREE–PHASE TRANSFORMERS PRIMARY CABLES MUST BE INSTALLED IN THE UNSHADED AREA OF DRAWING ABOVE AS FAR LEFT AS POSSIBLE.
5. SEE AC 701 FOR PAD–MOUNTED TRANSFORMER/CAPACITOR GROUNDING REQUIREMENTS AND AC 703 FOR APPROVED GROUNDING MATERIALS.
6. 1–INCH LISTING INSERT TO BE LOCATED AT CENTER OF GRAVITY ON PRECAST PADS.
7. SEE SS 500 FOR APPROVED MANUFACTURERS.
8. THE THREE–PHASE TRANSFORMER SHALL ONLY BE USED ON A PAD WHEN FOUR OR FEWER SERVICES ARE TO BE INSTALLED. A SLAB BOX SHOULD BE USED WHEN MORE THAN FOUR SERVICES WILL BE INSTALLED.
9. USE A THIN LAYER OF REDI–CRETE (OR EQUIVALENT) FOR RODENT AND WEED CONTROL OR WHERE TRANSFORMER DOES NOT FULLY COVER OPENING IN PAD.
10. A 17" X 30" X 15" PLASTIC HANDHOLE (SAP 10117471) SHALL BE INVERTED AND INSTALLED UNDER THE CABLE OPENING OF THE PAD. THIS WILL PROVIDE ADEQUATE CABLE SLACK FOR OPERATION OF THE LOAD–BREAK ELBOWS ON SINGLE PHASE TRANSFORMERS ONLY.

D43: 03/26/25

TYPICAL CONDUIT BANK SECTION
SEE UGS CD 120

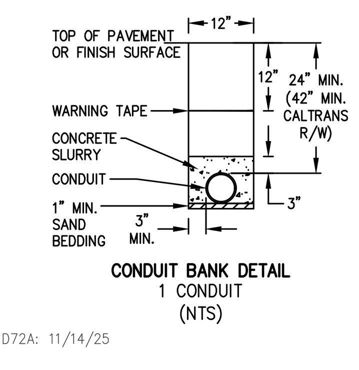

CONDUIT BANK DETAIL
1 CONDUIT
(NTS)

D72A: 11/14/25

LIST OF MATERIALS
[EDISON CO.]

SEE UGS SECTION INDEX
FOR REFERENCE DRAWINGS

NOTES:
1. FOOTAGE QUANTITIES ARE APPROXIMATE.
2. WHERE REFERENCE IS TO AN ITEM NOT DETAILED, SEE SEPARATE DESCRIPTION LIST.
3. THIS LIST PROVIDES A SUMMARY OF MAJOR ITEMS.

QTY.	UNIT	DESCRIPTION	SIZE	ITEM NO.	REF DWG.	REV. DATE

CONCRETE PRODUCTS
PRECAST CONCRETE ITEM COMPLETE WITH NECK, COVER AND INSERTS MAY BE OBTAINED FROM ANY OF THE FOLLOWING LISTED AND APPROVED MANUFACTURERS:

JENSEN PRECAST
14221 SAN BERNARDINO AVE
FONTANA, CA 92335
(909) 350–4111
(800) 257–6100

OLDCASTLE PRECAST
10650 HEMLOCK AVE,
FONTANA, CA 92337
(909) 428–3700
(800) 626–3860

FOR HANDHOLE AND PULLBOX MANUFACTURERS, SEE UGS HP 200.

D04A: 12/12/24

MINIMUM CLEARANCES FOR PADMOUNTED TRANSFORMERS
SEE DDS–3, 3–44

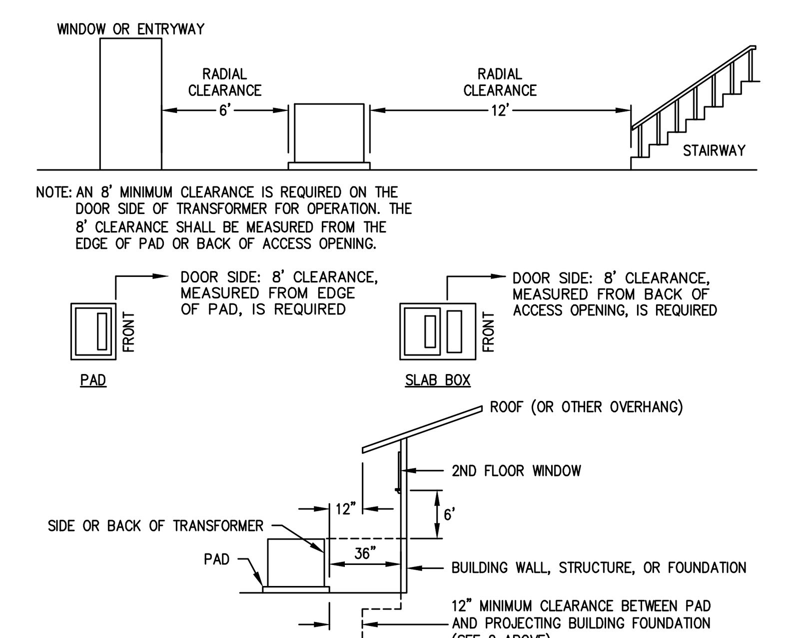

PAD–MOUNTED TRANSFORMER INSTALLATIONS SHALL CONFORM TO THE FOLLOWING:
1. PAD–MOUNTED TRANSFORMERS SHALL NOT BE LOCATED DIRECTLY IN FRONT OF ENTRYWAYS, STAIRWAYS, BENEATH WINDOWS THAT CAN BE OPENED, OR WHERE THEY WILL OBSTRUCT THE VISION OF VEHICULAR TRAFFIC.
2. PAD–MOUNTED TRANSFORMERS SHALL BE LOCATED AT LEAST THE MINIMUM DISTANCE, AS IDENTIFIED IN THE FIGURE ABOVE, AWAY FROM BUILDINGS OR OTHER STRUCTURES TO ENSURE ADEQUATE SPACE FOR OPERATING, TO MINIMIZE VIBRATION HUMS, AND TO MEET FIRE SAFETY REQUIREMENTS.
3. WHENEVER POSSIBLE, PLACE PAD–MOUNTED STRUCTURES AND EQUIPMENT AWAY FROM AREAS WITH FREQUENT IRRIGATION TO HELP PREVENT FUTURE CORROSION.
   INSTALL NEW STAINLESS STEEL PAD–MOUNTED EQUIPMENT ONLY IF EVERY EFFORT HAS BEEN MADE TO LOCATE THE PAD MOUNT AWAY FROM HIGH–CORROSION AREAS AND THE PAD MOUNT IS EXPECTED TO BE CHANGED OUT WITHIN 15 YEARS DUE TO CORROSION. CONTACT FE FOR APPROVAL.
   EXISTING MILD STEEL PAD–MOUNTED EQUIPMENT MAY BE UPGRADED TO STAINLESS STEEL IF THE EXISTING EQUIPMENT HAS FAILED DUE TO CORROSION WITHIN 15 YEARS OF INSTALLATION. CONTACT FE FOR APPROVAL.
   * NOTE: ALL PAD–MOUNTED TRANSFORMERS PURCHASED AFTER 2004 ARE DESIGNED WITH STAINLESS STEEL BOTTOMS.
4. A CLEAR PASSAGEWAY OF 12 FEET MINIMUM SHALL BE AVAILABLE AT ALL TIMES, IMMEDIATELY ADJACENT TO ONE SIDE OF THE TRANSFORMER TO PROVIDE AN ACCESSIBLE ROADWAY FOR TRANSFORMER MAINTENANCE. THIS PASSAGEWAY SHALL BE DESIGNED TO MEET H–20 (20–TON) CONSTRUCTION.
5. IF SCE HAS INSTALLED OR AGREES TO INSTALL, TRANSFORMERS AT LOCATIONS WHERE SCE CANNOT USE ITS STANDARD TRANSFORMER LIFTING EQUIPMENT, AND SPECIAL LIFTING FACILITIES ARE REQUIRED TO INSTALL OR REMOVE THE TRANSFORMERS ON THE CUSTOMER'S PREMISES, THE CUSTOMER SHALL, AT THEIR EXPENSE, (1) FURNISH, INSTALL, OWN, AND MAINTAIN PERMANENT LIFTING FACILITIES, AND BE RESPONSIBLE FOR LIFTING THE TRANSFORMER TO AND FROM ITS PERMANENT POSITION, OR (2) PROVIDE (OR PAY FOR) PORTABLE LIFTING FACILITIES ACCEPTABLE TO SCE FOR INSTALLING OR REMOVING THE TRANSFORMERS. RIGHTS–OF–WAY AND SPACE PROVISIONS SHALL BE PROVIDED BY APPLICANT SUCH THAT ACCESS AND REQUIRED CLEARANCES FROM ADJACENT STRUCTURES CAN BE MAINTAINED.
6. TRANSFORMER STRUCTURES WILL NORMALLY BE INSTALLED ONLY IN NONTRAFFIC AREAS. TRANSFORMER PROTECTION IS REQUIRED WHEN COMPANY EQUIPMENT IS EXPOSED TO TRAFFIC. THIS PROTECTION MAY BE IN THE FORM OF BARRIERS, BARRICADES, OR CURB. A CURB MUST HAVE A MINIMUM HEIGHT OF 6 INCHES AND BE AT LEAST 6 INCHES THICK AND ITS FRONT FACE LOCATED 60 INCHES MINIMUM FROM THE EQUIPMENT FOUNDATION.

D54: 03/22/24

PRECAST TUB–TYPE VAULTS WITH COVER RESTRAINTS
SEE UGS VA 410

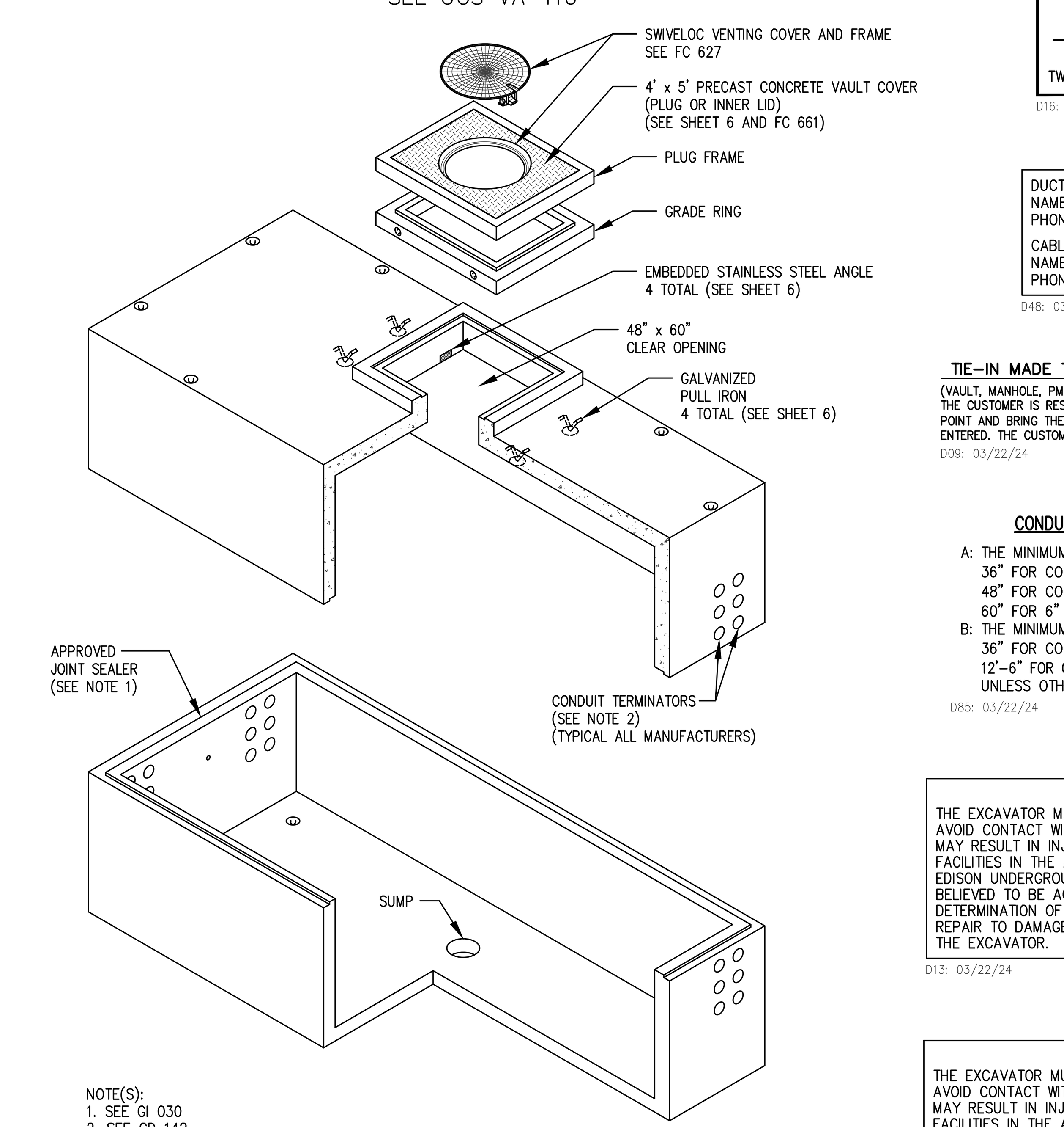

NOTE(S):
1. SEE GI 030
2. SEE CD 142

D60: Rev. 06/08/20

CONNECTING TO EXISTING SCE STRUCTURES
- PER SCE REQUIREMENTS, CUSTOMERS ARE NOT ALLOWED TO ENTER, INTERCEPT OR TIE–IN TO EXISTING SCE FACILITIES; E.G. STRUCTURES, EQUIPMENT, MULTI–CONDUIT RUNS/BANKS, OR CONDUCTORS. THESE FACILITIES MAY BE ENERGIZED AND THE WORK WILL ONLY BE PERFORMED BY SCE. CONTACT THE APPROPRIATE SCE INSPECTOR TO SCHEDULE AN APPOINTMENT. CUSTOMERS MAY CONNECT TO AN EXISTING CONDUIT STUB WITHOUT A SCE INSPECTOR PRESENT.
- MULTI–CONDUIT RUNS/BANKS ARE RUNS OF CONDUIT IN CLOSE PROXIMITY TO EACH OTHER AND OTHER SCE FACILITIES. A CONDUIT STUB IS A SINGLE EMPTY CONDUIT STUB THAT IS NOT IN CLOSE PROXIMITY TO OTHER SCE OWNED FACILITIES. REFER TO THE WORK ORDER MAP FOR DETAILS.
- PER CPUC/SCE'S RULE 15 B.1.A AND RULE 16 D.1.A., THE CUSTOMER WILL PROVIDE ALL NECESSARY EXCAVATIONS (WITH THE EXCEPTION OF EXCAVATION UNDER PADS AND PRIMARY SPLICE BOXES), MATERIAL (INCLUDING CONDUIT AND STRUCTURES) AND ENCASEMENT, TO BE UTILIZED IN THE INTERCEPT/TIE–IN PROCESS.
- THE CUSTOMER MUST ADHERE TO ALL APPLICABLE CAL–OSHA, LOCAL, CITY, STATE AND FEDERAL REGULATIONS, (INCLUDING, BUT NOT LIMITED TO, ALL NECESSARY SHORING AND TRAFFIC CONTROL IN PLACE TO PERFORM THE INTERCEPT/TIE–IN WORK BY SCE'S UNDERGROUND CIVIL CONTRACTOR(S)).
- INTERCEPT/TIE–IN WORK MUST BE COORDINATED WITH SCE'S CIVIL CONTRACTORS THROUGH THE DIVISION INSPECTOR/P–SPEC TO LIMIT EXPOSURE OF EXCAVATION(S). CUSTOMER IS RESPONSIBLE FOR SECURING EXCAVATION(S).

D08: 12/12/24

VAULT/MANHOLE RESTRAINT SYSTEM INSTALLED

☐ NO ENTRY	NO ENTRY
☐ EM3	EJ EM3 COVER & RESTRAINT KIT
☐ SWIVELLOC	NEENAH SWIVELOC/RESTRAINT KIT
☐ SQUARE PLATE SWIVELOC	NEENAH SWIVELOC COVER BEAM RES

D17: 03/22/24

WHERE CONDUITS ARE PICKED UP OR INTERCEPTED, CONDUIT SHALL BE MANDRELLED AND PULL ROPE INSTALLED FROM TERMINAL TO TERMINAL.

D07: 03/22/24

UNDERGROUND SERVICE ALERT
Contact USA
Dial 811 or 800-422-4133
www.digalert.org/contact
FOR UNDERGROUND LOCATING
TWO WORKING DAYS BEFORE YOU DIG

D16: 03/22/24

DUCT AND STRUCTURE INSPECTOR
NAME:
PHONE:
CABLING CONSTRUCTION COORDINATOR
NAME:
PHONE:

D48: 03/22/24

TIE–IN MADE THROUGH SIDE WALL OF STRUCTURE
(VAULT, MANHOLE, PME, SOE/CST, BURD, SLAB BOX, PULL BOX, PMH)
THE CUSTOMER IS RESPONSIBLE TO TRENCH TO THE STRUCTURE ENTRANCE POINT AND BRING THE CONDUIT TO WITHIN 5' OF THE STRUCTURE BEING ENTERED. THE CUSTOMER IS TO PROVIDE SLIP COUPLING AND CONDUIT.

D09: 03/22/24

CONDUIT RADIUS REQUIREMENTS:
A: THE MINIMUM RADIUS FOR BENDS ARE:
   36" FOR CONDUITS 3" IN DIAMETER OR SMALLER
   48" FOR CONDUITS 4" AND 5" IN DIAMETER
   60" FOR 6" DIAMETER CONDUIT
B: THE MINIMUM RADIUS FOR SWEEPS ARE:
   36" FOR CONDUITS 3" IN DIAMETER OR SMALLER
   12'–6" FOR CONDUITS 4" IN DIAMETER AND LARGER, UNLESS OTHERWISE NOTED.

D85: 03/22/24

WARNING
THE EXCAVATOR MUST TAKE ALL STEPS NECESSARY TO AVOID CONTACT WITH UNDERGROUND FACILITIES WHICH MAY RESULT IN INJURY TO PERSONS OR DAMAGE TO FACILITIES IN THE AREA. THE INDICATED LOCATIONS OF EDISON UNDERGROUND FACILITIES, AS PROVIDED, ARE BELIEVED TO BE ACCURATE, HOWEVER, THE FINAL DETERMINATION OF EXACT LOCATIONS AND THE COST OF REPAIR TO DAMAGED FACILITIES IS THE RESPONSIBILITY OF THE EXCAVATOR.

D13: 03/22/24

WARNING
THE EXCAVATOR MUST TAKE ALL STEPS NECESSARY TO AVOID CONTACT WITH UNDERGROUND FACILITIES WHICH MAY RESULT IN INJURY TO PERSONS OR DAMAGE TO FACILITIES IN THE AREA. THE INDICATED LOCATIONS OF EDISON UNDERGROUND FACILITIES, AS PROVIDED, ARE BELIEVED TO BE ACCURATE, HOWEVER, THE FINAL DETERMINATION OF EXACT LOCATIONS AND THE COST OF REPAIR TO DAMAGED FACILITIES IS THE RESPONSIBILITY OF THE EXCAVATOR.

D13: 03/22/24

PUBLIC WORKS DEPARTMENT ENGINEERING DIVISION	
CITY OF SAN BUENAVENTURA	
[signature] PRINCIPAL ENGINEER	DATE
[signature] CITY ENGINEER	5/7/2026 DATE

THIS PLAN APPROVED AS TO LOCATION AND TYPE OF ELECTRIC SUBSTRUCTURES
DEVELOPER: City of San Buenaventura, Public Works
ATTN: Greg Knudson, Principal Civil Engineer
ADDRESS: 501 Poli Street, Room 120
Ventura, CA
TELEPHONE: 805-654-7830
FAX:

DWG./REV.	DEVELOPER'S SIGNATURE	DATE
ORIGINAL	[signature]	7 April 2026
REV.		
REV.		
REV.		

CHANGES IN THESE PLANS WILL REQUIRE AN ADDITIONAL 3 TO 4 WEEKS AND CUSTOMER WILL BE CHARGED IN ADVANCE FOR REQUESTED CHANGES.

PRELIMINARY
NOT FOR CONSTRUCTION

DISTRICT 39 – VENTURA	PROJ. MGR. WALL, STEVEN D PHONE 8056547118	PLANNER WALL, STEVEN D PHONE 8056547118	DESIGNER RIFFEL, RILEY
PROJECT NO. 3166536 / SERVICE REQUEST 4044496	MSR NO.	PRODUCT–1 2489602–NEW METER & SERVICE	ASSOC DESGN
CIRCUIT / VOLTAGE RICARDO 16KV	GPS	PRODUCT–2	ASSOC DESGN
SUB / PG NO. SAN MIGUEL	CIRCUIT CODE	PRODUCT–3	ASSOC DESGN
INVENTORY MAP 038–021C–8	J.P.A. NO.	PROPOSED CONSTRUCTION (LOCATION) 2269 ALESSANDRO DR VENTURA CA 93001	

TYPE	DATE	APPROVED BY	CHECKED BY	DRAWN BY	PAX #
P	3/17/26		S.WALL	R.RIFFEL	24687

SHEET 1 OF 2 — DESIGN\DRWG NO. 1908055_0.01

Southern California Edison Company

PROJECT REQUIREMENTS (Y/N)	
EDISON EASEMENT REQUIRED	N
PWRD 88 REQUIRED UG	Y
CIVIL ONLY WORK ORDER	N
PERMIT REQUIRED	Y
PERMIT TYPE: ENCROACHMENT & TRAFFIC	
OUTAGE REQUIRED	Y
OUTAGE DATE:_____ TIME:_____	
TRAFFIC CONTROL REQUIRED	Y
PED. TRAFFIC CONTROL REQ'D	N
CONVEYANCE LETTER REQ'D	N
ENVIRONMENTAL REQUIREMENTS DOCUMENT (ERD) REQUIRED	Y
CSD 140 (TLM) REQ'D	Y
CIRCUIT MAP CHANGE REQ'D (TD 203)	Y
DIG ALERT APP	N
VERIFIED ACTIVE AND CONFIRMED USA TICKETS	N
UTILIQUEST NOTIFIED	N
FAA MARKING REQ'D	N
FAA TYPE: _____	
ACTUAL COST WORK ORDER	N
STANDARD ADHERENCE: 01 Q/ 26 Y	

0124: 12/12/24

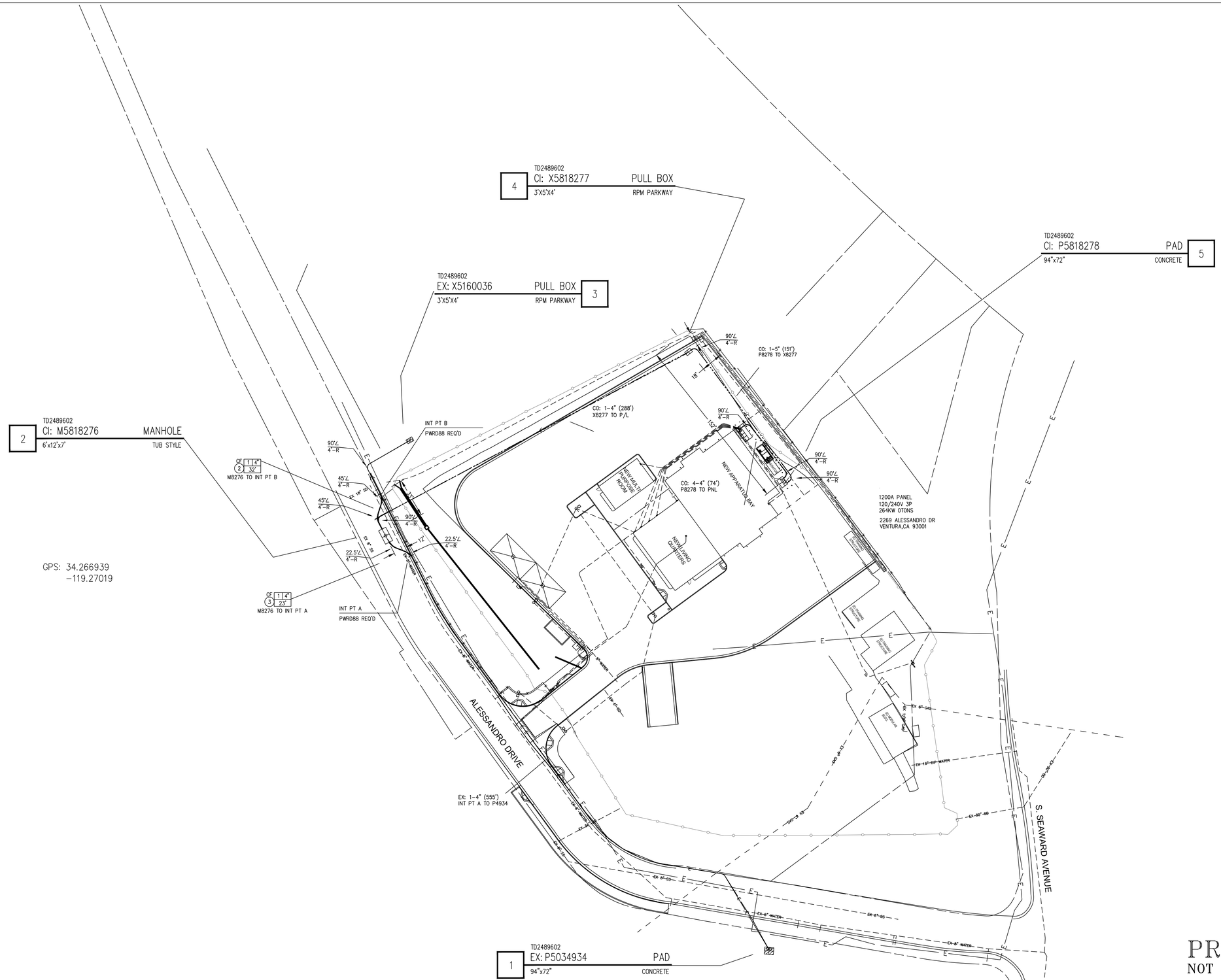

PRELIMINARY
NOT FOR CONSTRUCTION

SCALE: 1" = 40'
0 40 80

SOUTHERN CALIFORNIA EDISON
An EDISON INTERNATIONAL Company

DISTRICT 39 – VENTURA		PROJ. MGR. WALL, STEVEN D PHONE 8056547118		PLANNER WALL, STEVEN D PHONE 8056547118	DESIGNER RIFFEL, RILEY
PROJECT NO. 3166536	SERVICE REQUEST 4044496	MSR NO.	PRODUCT-1 2489602-NEW METER & SERVICE		ASSOC DESGN
CIRCUIT / VOLTAGE		GPS	PRODUCT-2		ASSOC DESGN
SUB / PG NO.		CIRCUIT CODE	PRODUCT-3		ASSOC DESGN
INVENTORY MAP 038-021C-8		J.P.A. NO.	PROPOSED CONSTRUCTION (LOCATION) 2269 ALESSANDRO DR VENTURA CA 93001		

TYPE	DATE	APPROVED BY	CHECKED BY	DRAWN BY	PAX #
P	3/17/26		S.WALL	R.RIFFEL	24687

SHEET 2 OF 2 — DESIGN\DRWG NO. 1908055_0.01

PUBLIC WORKS DEPARTMENT ENGINEERING DIVISION
CITY OF SAN BUENAVENTURA

PRINCIPAL ENGINEER — DATE: 5 May 2026
CITY ENGINEER — DATE: 5/7/2026

Southern California Edison Company

FILE NAME:1908055_0.01DWG SAVE DATE:3/19/2026 7:54 AM SAVED BY:CZAVARA